Dometic

RECORD THIS UNIT INFORMATION
FOR FUTURE REFERENCE:
Model Number _____
Serial Number _____
Date Purchased _____

Roof Top Air Conditioner
Duo-Therm HP Model
520300, 520310, 520315 & 520316
Roof Top Heat Pump
Duo-Therm HP Model
530715 & 530716

Ducted used with one of the following Return Air Kits:
3105007.XXX Return Air Grill
3105935.XXX Quick Cool Grill
3308120.XXX Genesis Air Filtration System
AND
3312020.000 Electronic Control Kit
AND
3312024.XXX Comfort Control Center Thermostat
AND
3311931.XXX Remote Temperature Sensor Kit

This Unit Is Designed For OEM Installation
All Initial Installations Must Be Approved By
Dometic, LLC

USA
SERVICE OFFICE
Dometic, LLC
2320 Industrial Parkway
Elkhart, IN 46516
574-294-2511

CANADA
Dometic, LLC
46, Zatonski, Unit 3
Brantford, ON N3T 5L8
CANADA
519-720-9578

For Service Center Assistance Call:
800-544-4881

⚠ WARNING

This manual must be read and understood before installation, adjustment, service, or maintenance is performed. This unit must be installed by a qualified service technician. Modification of this product can be extremely hazardous and could result in personal injury or property damage.

⚠ AVERTISSEMENT

Lire et comprendre ce manuel avant de procéder à l'installation, à des réglages, de l'entretien ou des réparations. L'installation de cet appareil doit être effectuée par un réparateur qualifié. Toute modification de cet appareil peut être extrêmement dangereuse et entraîner des blessures ou dommages matériels.

C US

MODEL

520300.501	520316.301	530715.701
520300.506	520316.306	530715.706
520310.501	520316.501	530716.301
520310.506	520316.506	530716.306
520315.501	520316.701	530716.501
520315.506	520316.706	530716.506
520315.701	530715.501	530716.701
520315.706	530715.506	530716.706

INSTALLATION INSTRUCTIONS

Form No. 3312759.000 11/08
(French 3312760.000)

©2008 Dometic, LLC

LaGrange, IN 46761

Important: **These instructions must stay with unit. Owner read carefully.**

SAFETY INSTRUCTIONS

This manual has safety information and instructions to help users eliminate or reduce the risk of accidents and injuries.

RECOGNIZE SAFETY INFORMATION

This is the safety-alert symbol. When you see this symbol in this manual, be alert to the potential for personal injury.

Follow recommended precautions and safe operating instructions.

UNDERSTAND SIGNAL WORDS

A signal word, **WARNING** OR **CAUTION** is used with the safety-alert symbol. They give the level of risk for potential injury.

⚠ WARNING indicates a potentially hazardous situation which, if not avoided, could result in death or serious injury.

⚠ CAUTION indicates a potentially hazardous situation which, if not avoided, may result in minor or moderate injury.

CAUTION used without the safety alert symbol indicates, a potentially hazardous situation which, if not avoided, may result in property damage.

Read and follow all safety information and instructions.

GENERAL INFORMATION

A. Product features or specifications as described or illustrated are subject to change without notice.

B. This Air Conditioner/Heat Pump (herinafter referred to as the "unit") Is Designed For:
1. Installation on a recreational vehicle at the time the vehicle is manufactured.
2. Mounting on the roof of a recreational vehicle.
3. Roof construction with rafters/joists on minimum of 16 inch centers.
4. Minimum of 2.00 inches and maximum of 5.50 inches distance between roof to ceiling of recreational vehicle. Alternate installation methods will allow for roofs more than 5.50 inches thick.

C. The ability of this air conditioner to maintain the desired inside temperature depends on the heat gain of the RV.
Some preventative measures taken by the occupants of the RV can reduce the heat gain and improve the performance of the air conditioner. During extremely high outdoor temperatures, the heat gain of the vehicle may be reduced by:
1. Parking the RV in a shaded area
2. Using window shades (blinds and/or curtains)
3. Keeping windows and doors shut or minimizing usage
4. Avoiding the use of heat producing appliances

Operation on High Fan/Cooling mode will give optimum or maximum efficiency in high humidity or high outside temperatures.

Starting the air conditioner early in the morning and giving it a "head start" on the expected high outdoor ambient will greatly improve its ability to maintain the desired indoor temperature.

For a more permanent solution to high heat gain, accessories like A&E outdoor patio and window awnings will reduce heat gain by removing the direct sun. They also add a nice area to enjoy company during the cool of the evening.

D. Condensation

Note: The manufacturer of this unit will not be responsible for damage caused by condensed moisture on ceilings or other surfaces. Air contains moisture and this moisture tends to condense on cold surfaces. When air enters the RV, condensed moisture may appear on the ceiling, windows, metal parts, etc. During normal operation this unit removes moisture from the air. Keeping doors and windows closed when this air conditioner is in operation will minimize condensed moisture on cold surfaces.

SPECIFICATIONS

Model No.	Nominal Capacity (BTU HR) Cooling	Electrical Rating 120 VAC 60 Hz. 1 PH	Compressor Rated Load Amps	Compressor Locked Rotor Amps	Fan Motor Rated Load Amps	Fan Motor Locked Rotor Amps	Refrigerant R-22 (Oz.)	Minimum Wire Size* 12 AWG Copper Up to 24'	AC Circuit Protection ***Installer Supplied	Minimum Generator Size** 1 Unit / 2 Units
520300.501	N/A		7.8	49.0	3.0	8.5	20.0		15 Amp	2.5 KW / 4.0 KW
520300.506	N/A		7.8	49.0	3.0	8.5	20.0		15 Amp	2.5 KW / 4.0 KW
520310.501	9,000		7.8	49.0	3.0	8.5	20.0		20 Amp	2.5 KW / 4.0 KW
520310.506	9,000		7.8	49.0	3.0	8.5	20.0		20 Amp	2.5 KW / 4.0 KW
520315.501	13,500		10.3	62.0	3.0	8.5	16.5		20 Amp	3.5 KW / 5.0 KW
520315.506	13,500		10.3	62.0	3.0	8.5	16.5		20 Amp	3.5 KW / 5.0 KW
520315.701	13,500		12.0	58.0	3.0	8.5	16.5		20 Amp	3.5 KW / 5.0 KW
520315.706	13,500		12.0	58.0	3.0	8.5	16.5		20 Amp	3.5 KW / 5.0 KW
520316.301	15,000		13.2	60.0	2.8	7.6	30.0		20 Amp	3.5 KW / 5.0 KW
520316.306	15,000		13.2	60.0	2.8	7.6	30.0		20 Amp	3.5 KW / 5.0 KW
520316.501	15,000		13.2	79.0	2.8	7.6	30.0		20 Amp	3.5 KW / 5.0 KW
520316.506	15,000		13.2	79.0	2.8	7.6	30.0		20 Amp	3.5 KW / 5.0 KW
520316.701	15,000		13.2	62.0	2.8	7.6	30.0		20 Amp	3.5 KW / 5.0 KW
520316.706	15,000		13.2	62.0	2.8	7.6	30.0		20 Amp	3.5 KW / 5.0 KW
530715.501	13,500		10.3	62.0	3.0	8.5	17.5		20 Amp	3.5 KW / 5.0 KW
530715.506	13,500		10.3	62.0	3.0	8.5	17.5		20 Amp	3.5 KW / 5.0 KW
530715.701	13,500		12.2	58.0	3.0	8.5	17.5		20 Amp	3.5 KW / 5.0 KW
530715.706	13,500		12.2	58.0	3.0	8.5	17.5		20 Amp	3.5 KW / 5.0 KW
530716.301	15,000		13.2	60.0	2.8	7.6	29.5		20 Amp	3.5 KW / 5.0 KW
530716.306	15,000		13.2	60.0	2.8	7.6	29.5		20 Amp	3.5 KW / 5.0 KW
530716.501	15,000		13.2	79.0	2.8	7.6	29.5		20 Amp	3.5 KW / 5.0 KW
530716.506	15,000		13.2	79.0	2.8	7.6	29.5		20 Amp	3.5 KW / 5.0 KW
530716.701	15,000		13.2	62.0	2.8	7.6	29.5		20 Amp	3.5 KW / 5.0 KW
530716.706	15,000		13.2	62.0	2.8	7.6	29.5		20 Amp	3.5 KW / 5.0 KW

* For wire length over 24 ft., consult the National Electric Code for proper sizing.

** Dometic, LLC gives **GENERAL** guidelines for generator requirements. These guidelines come from experiences people have had in actual applications. When sizing the generator, the total power usage of your recreational vehicle must be considered. Keep in mind generators lose power at high altitudes and from lack of maintenance.

*** CIRCUIT PROTECTION: Time Delay Fuse or HACR Circuit Breakers Required.

INSTALLATION INSTRUCTIONS

⚠ WARNING

Improper installation may damage equipment, could endanger life, cause serious injury and/or property damage.

A. Precautions

1. Read Installation and Operating Instructions carefully before attempting to start this unit installation.
2. Dometic, LLC will not be liable for any damages or injury incurred due to failure in following these instructions.
3. Installation must comply with the National Electrical Code ANSI/NFPA-70 and CSA Standard C22.1 (latest edition) and any State or Local Codes or regulations.
4. **DO NOT** add any devices or accessories to this unit except those specifically authorized in writing by Dometic, LLC.
5. This equipment must be serviced by qualified personnel and some states require these people to be licensed.

B. Choosing Proper Location For The Unit

This unit is specifically designed for installation on the roof of a recreational vehicle (RV). When determining your cooling requirements, the following should be considered:

- Size of RV.
- Window area (increases heat gain).
- Amount of insulation in walls and roof.
- Geographical location where the RV will be used.
- Personal comfort level required.

1. For One Unit Installation: The unit should be mounted slightly forward of center (front to back) and centered from side to side.
2. For Two Unit Installations: Install one unit one-third and one unit two-thirds from front of RV and centered from side to side.

It is preferred that the unit be installed on a relatively **flat and level** roof section measured with the RV parked on a level surface.

Note: Up to a 15° slant to **either** side, or front to back, is acceptable for all models listed in this manual.

3. After Location Has Been Selected:
   a. Check for obstructions in the area where the unit will be installed. See FIG. 1.

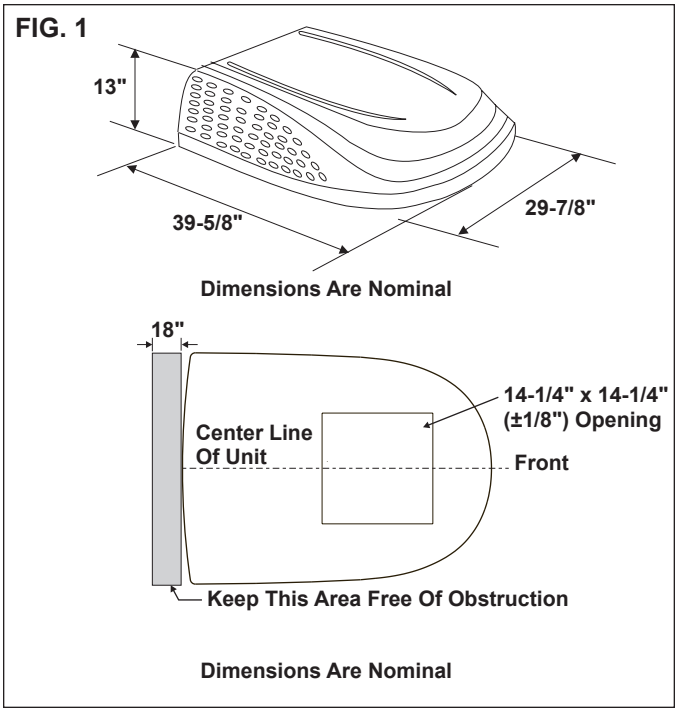

   b. The roof must be designed to support 130 pounds when the RV is in motion. Normally 200 pound static load design will meet this requirement.

CAUTION

It is the responsibility of the installer of this system to ensure structural integrity of the RV roof. Never create a low spot on the roof where water will collect. Water standing around the unit may leak into the interior causing damage to the product and the RV.

   c. Check inside the RV for return air grill obstructions (i.e. door openings, room dividers, curtains, ceiling fixtures, etc.) See FIG. 2.

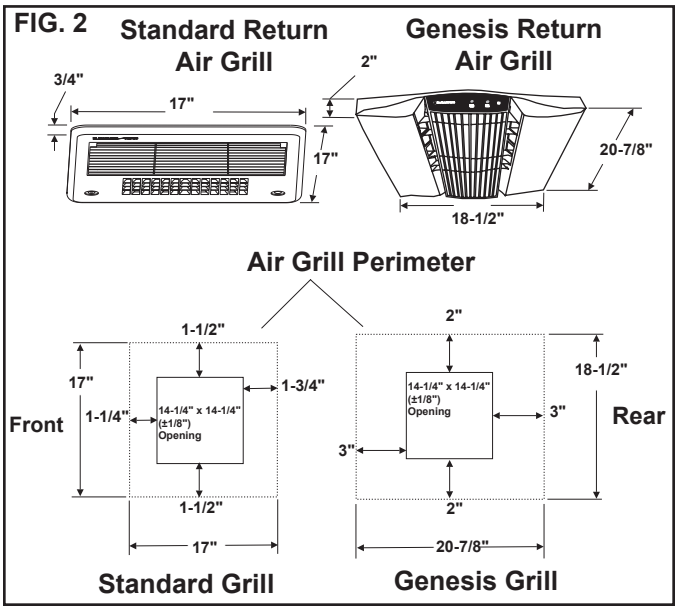

C. Roof Preparation

1. Opening Requirements - Before preparing the ceiling opening, the type of system options must be decided upon. Read all of the following instructions before beginning the installation.

⚠ WARNING

There may be electrical wiring between the roof and the ceiling. Disconnect 120 VAC power cord and the positive (+) 12 VDC terminal at the supply battery. Failure to follow this instruction may create a shock hazard causing death or severe personal injury.

2. Mark a 14-1/4" x 14-1/4" (±1/8") square on the roof and carefully cut the opening. The 14-1/4" x 14-1/4" (±1/8") opening is part of the return air system of the unit and must be finished in accordance with NFPA Standard 501C Section 2.7.2.
3. Using the roof opening as a guide, cut the matching hole in the ceiling.
4. The opening created must be framed to provide adequate support and prevent air from being drawn from the roof cavity. Lumber 3/4" or more in thickness must be used. Remember to provide an entrance hole for power supplies, remote temperature sensor cable, 4 conductor control cable, and furnace wiring.

FIG. 3

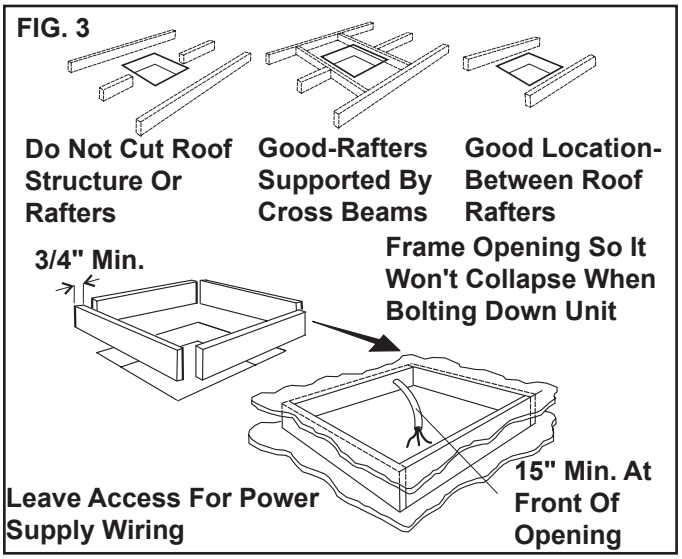

CAUTION

It is the responsibility of the installer of this system to ensure structural integrity of the RV roof. Never create a low spot on the roof where water will collect. Water standing around the unit may leak into the interior causing damage to the product and the RV.

5. Air Distribution Duct System Sizing & Design (See Chart On Page 6)

CAUTION

It is the responsibility of the installer to insure the duct work will not collapse or bend during and after the installation. Dometic, LLC will not be liable for roof structural or ceiling damage due to improperly insulated, sealed or collapsed duct work.

The Installer of this system must design the air distribution system for their particular application. Several requirements for this system **MUST** be met for the unit to operate properly. These requirements are as follows:

a. The duct material must meet or exceed any agency or RVIA Standard that may be in existence at the time the RV is produced.
b. All discharge air ducts must be properly insulated to prevent condensation from forming on their surfaces or adjacent surfaces during operation of the unit. This insulation must be R-7 minimum.

FIG. 4

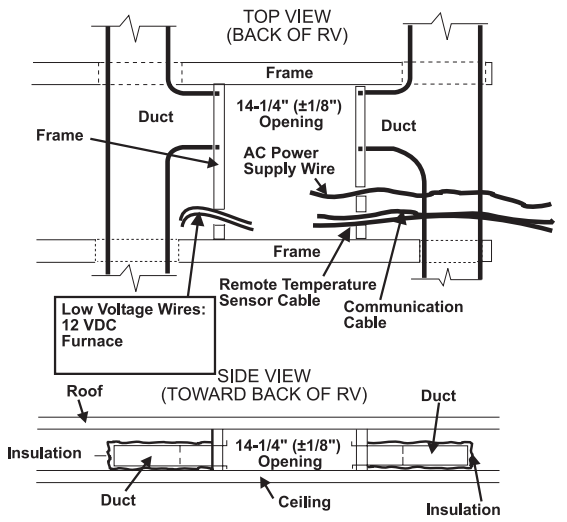

c. Ducts and their joints must be sealed to prevent condensation from forming on adjacent surfaces during operation of the unit.
d. Return air openings must have 40 square inches minimum free area including the filter.
e. Return air to the unit must be filtered to prevent dirt accumulation on unit cooling surface.

6. Air Distribution System Installation
   a. Dometic, LLC recommends the basic configuration shown on page 7, for installing this system. We have found by testing, that this configuration works best in most applications of this system. It is the responsibility of the Installer of this system to review each RV floor plan and determine the following:

- Duct size
- Duct layout
- Register size
- Register location
- Thermostat location
- Remote Temperature Sensor Location

These items must be determined in conjunction with the Air Distribution Duct System Sizing and Design Requirements listed in the chart below.

Important: Alternate configurations and methods may be used which still allow the unit to operate properly; however, these alternate configurations and methods must be approved by Dometic, LLC in writing. The following instructions are based upon the use of Return Air Grill Kits 3105007.XXX, 3105935.XXX, or 3308120.XXX Genesis Air Filtration System.

Air Distribution Duct Sizing & Design Chart For Ducted Applications

	Return Air Grill Kit 3105007.XXX 3105935.XXX	**Genesis Air Filtration System Kit 3308120.XXX**
Roof Cavity Depth	2.0 In. Min. - 5-1/2 In. Max.	2.0 In. Min. - 5-1/2 In. Max.
Duct Cross Sectional Area	21.0 Sq. In. Min.	32.0 Sq. In. Min.
Duct Size		
Depth	1-1/2 In. Min. - 2-1/2 In. Max.	2.0 In. Min. - 2-1/2 In. Max.
Width	7.0 In. Min. - 10.0 In. Max.	8.0 In. Min. - 10.0 In. Max.
Total Duct Length	15.0 Ft. Min. - 40.0 Ft. Max.	15.0 Ft. Min. - 40.0 Ft. Max.
Duct Length (short run)	1/3 Total Duct Length	1/3 Total Duct Length
Register Requirements		
Number Required Per Run	4 Min.	4 Min.
Register Free Air Area	14.0 Sq. In.	14.0 Sq. In.
Distance From Duct End	5.0 In. Min. - 8.0 In. Max.	5.0 In. Min. - 8.0 In. Max.
Distance From Elbow	15.0 In.	15.0 In.
Total System Static Air Pressure Blower at High Speed, Filter & Grill In Place	0.55 - 1.10 In. W.C. 520300, 520310, 520315 & 530715 Series 0.70 - 1.10 In. W.C. 520316 Series 0.70 - 0.90 In. W.C. 530716 Series	0.50 - 1.10 In. W.C. 520300, 520310, 520315 & 530715 Series 0.70 - 1.10 In. W.C. 520316 Series 0.70 - 0.90 In. W.C. 530716 Series

Note: Duct sizes listed are inside dimensions.

FIG. 5

Duct Size And Requirements For 3105007.XXX And 3105935.XXX Return Air Grill

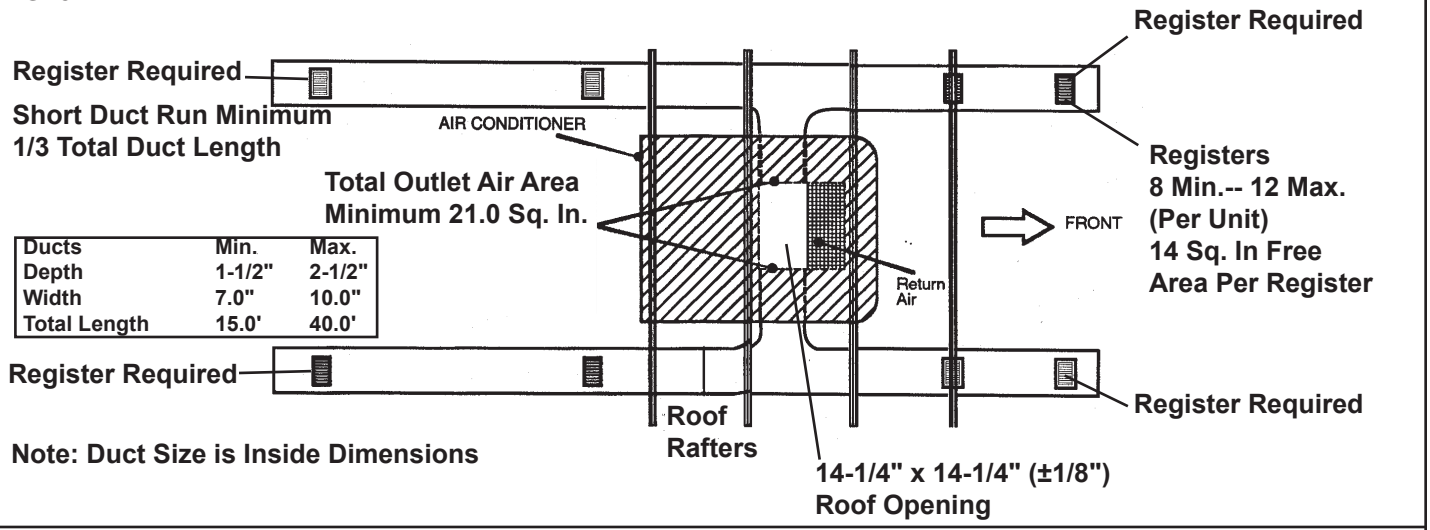

Ducts	Min.	Max.
Depth	1-1/2"	2-1/2"
Width	7.0"	10.0"
Total Length	15.0'	40.0'

Note: Duct Size is Inside Dimensions

Duct Size And Requirements For 33308120.XXX Genesis Air Filtration System

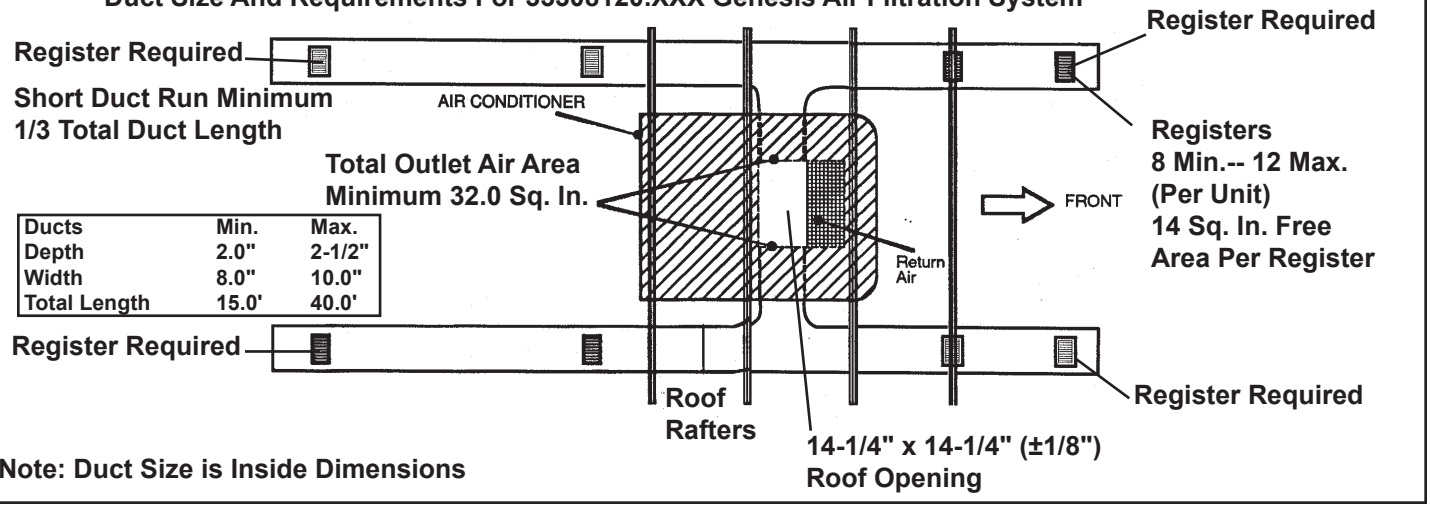

Ducts	Min.	Max.
Depth	2.0"	2-1/2"
Width	8.0"	10.0"
Total Length	15.0'	40.0'

Note: Duct Size is Inside Dimensions

D. Wiring Requirements

1. Route a 120 VAC copper 12 AWG, with ground, supply line from the time delay fuse or circuit breaker box to the roof opening.
   a. This supply line must be located in the front portion of the 14-1/4" x 14-1/4" (±1/8") opening.
   b. The power supply MUST be on a separate time delay fuse or HACR circuit breaker. The proper protection can be determined from the chart on page 3.
   c. Make sure that at least 15" of supply wire extends into the roof opening. This ensures easy connection at the electronic control box.
   d. Wiring must comply with NFPA 70: National Electrical Code regulations and any State or Local Codes or regulations.
   e. Protect the wire where it passes into the opening with approved method. See paragraph "d" above.
2. Route a dedicated 12 VDC supply line (18-22 AWG) from the RV's converter (filtered side) or battery to the roof opening.

Note: If more than 2 zones exist, route a dedicated 12 VDC supply line (18-22 AWG) to zone 1 and zone 3 roof opening.

   a. This supply line must be located in the front portion of the 14-1/4" x 14-1/4" (±1/8") opening.
   b. Make sure that at least 15" of supply wire extends into the roof opening.
3. Route a remote temperature sensor (a remote temperature sensor is required for the system to operate) from the roof opening to the remote temperature sensor location. The 2 pin connector end goes to the roof opening. See remote temperature sensor installation instructions for proper sensor location.
4. Route a 4 conductor communication cable from the Comfort Control Center thermostat mounting position into the 14-1/4" x 14-1/4" (±1/8") roof opening. Make sure that at least 15" of the wire extends into the roof opening and 6" extend from the wall at the mounting position of the Comfort Control Center thermostat. See Section E-1.
5. If a furnace is to be controlled by the system, the two furnace thermostat leads must be routed to the roof opening of the unit that will control it. Make sure that at least 15" of the furnace thermostat wire extends into the roof opening.
6. If an Energy Management System (load shed feature) is to be used with the control, two wires must be routed to the roof opening of the zone to be managed. The signal required for this function is normally an open relay contact. When the EMS calls for the compressor to shut off, the relay contacts should close. Make sure at least 15" of the EMS wire extends into the roof opening.
7. When more than one unit is installed (additional zones) an additional 4 conductor communication cable must be routed between each unit. Make sure that at least 15" of the wire extends into the roof opening. See FIG. 32.
8. If an automatic generator start kit (AGS) will be installed, a 4 conductor comunication cable must be routed from the last unit to the AGS kit location. Follow AGS kit instructions for installation.

E. Dometic Comfort Control Center Thermostat, Communication Cable, And Remote Temperature Sensor Installation

1. Comfort Control Center Location
   a. Select a location for the Comfort Control Center thermostat that is clearly visible and convenient for the user to program.
2. Communication Cable Installation
   a. A 4 conductor communication cable must be routed from the roof opening to the Comfort Control Center thermostat.
   b. The communication cable that should be used is a flat, 4 conductor telephone cable.
   c. The communication cable must be terminated with two (2) RJ-11-6C4P telephone connectors. Refer to the crimp tool manufacture for crimping instructions.

Important: RJ-11-6C4P connectors must be installed as shown in FIG. 6A & 6C.

FIG. 6A

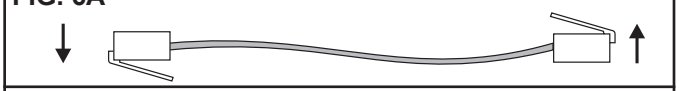

FIG. 6B

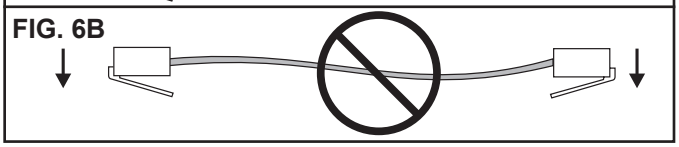

FIG. 6C

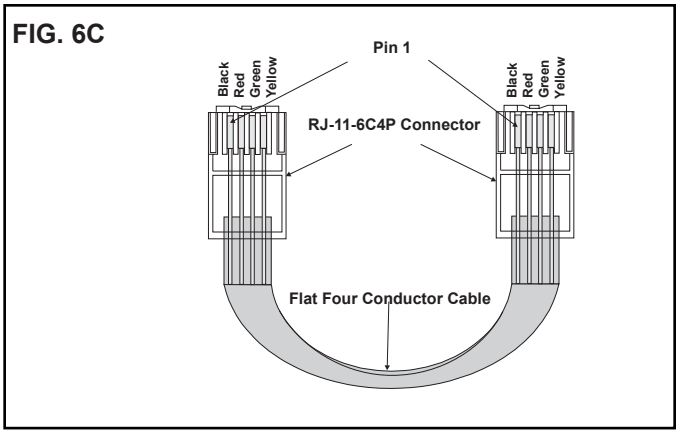

d. Choose the shortest, most direct route from the 14-1/4" x 14-1/4" (±1/8") opening to the selected Comfort Control Center thermostat location. Leave 6" of cable extending through the wall.
e. Route the cable through the 2" diameter hole in the wall required for the thermostat. See FIG. 7.

FIG. 7

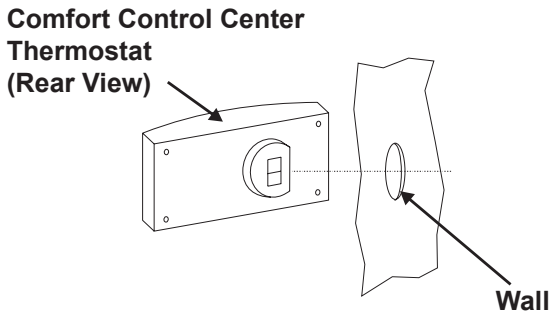

3. Remote Temperature Sensor
   a. Refer to the instructions provided with the remote temperature sensor for details of installation.
4. Comfort Control Center Thermostat Installation
   a. Carefully separate the thermostat base plate from the thermostat cover. Insert a small screw driver into the slot on bottom of thermostat and disengage the tab.

FIG. 8

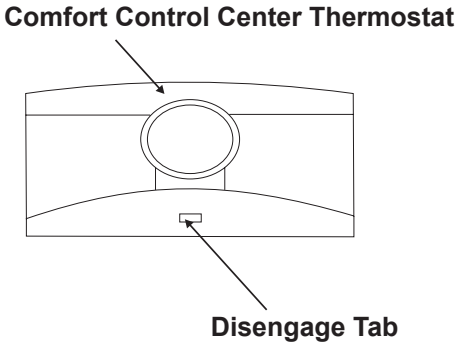

   b. Insert the 4 conductor communication cable through the hole in base plate. Align thermostat base plate with hole in wall. Make sure base plate is level and attach base plate to wall using the 4 supplied screws.
   c. Insert the 4 conductor communication cable connector (RJ-11-6C4P) into the connector on the back of the thermostat. See FIG. 9.

FIG. 9

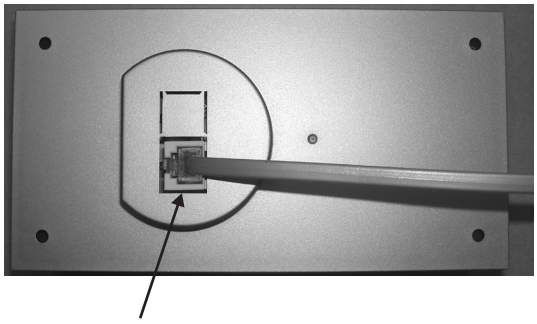

   d. Align the thermostat with the back plate and snap into position.

F. Placing The Unit On The Roof

⚠ CAUTION

This unit weighs approximately 100 pounds. To prevent back injury, use a mechanical hoist to place unit on roof.

1. Remove the unit from the carton and discard carton.
2. Place the unit on the roof.
3. Lift and place the unit over the prepared opening using the gasket on the unit as a guide. See FIG. 10.

CAUTION

Do not slide the unit. This may damage the neoprene gasket attached to the bottom and may create a leaky installation.

FIG. 10

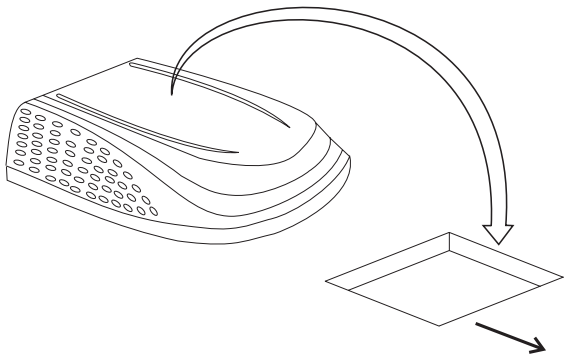

4. Place the 3312020.XXX electonic control kit and the return air grill kit inside the RV. These boxes contain mounting hardware for the unit and will be used inside the RV.
   This completes the outside work. Minor adjustments can be done from inside the RV if required.

G. Installing The Unit

- **Installing unit with 3105007.XXX or 3105935.XXX Return Air Grill. For unit with Genesis Air Filtration System see page 12.**

1. Installation Of Ceiling Template

FIG. 11

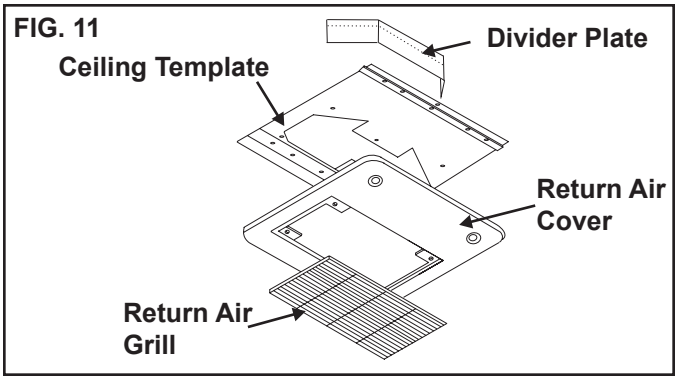

a. Check gasket alignment of the unit over the roof opening and adjust if necessary. Unit may be moved from below by slightly lifting. See FIG. 12.

FIG. 12 Center Unit From Below

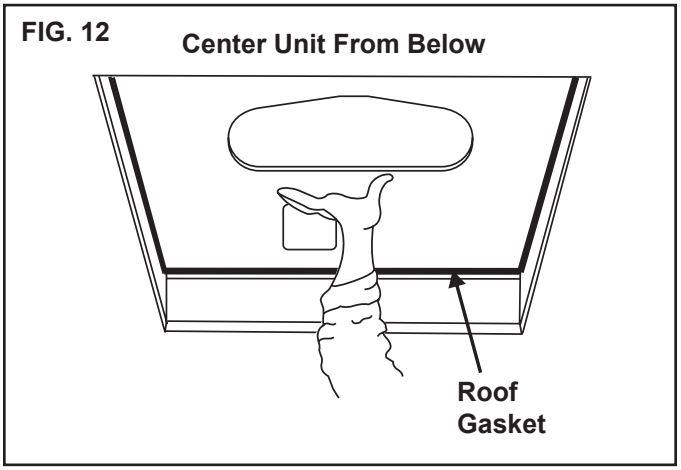

b. Remove return air cover and ceiling template from the 3105007.XXX or 3105935.XXX kit carton.
c. All models listed in this manual will use a four (4) bolt pattern for installing the 3105007.XXX or 3105935.XXX return air kit template. These bolts along with the electronic control box cover are furnished in the electronic control kit part number 3312020.XXX.
d. Reach up into the return air opening and pull the unit electrical cord down. See FIG. 13.

FIG. 13

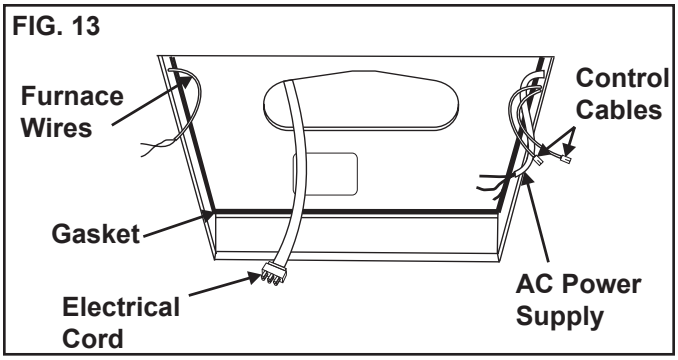

e. Hold the ceiling template up to the 14-1/4" x 14-1/4" (±1/8") opening. Be sure the large plate faces the rear of the RV. See FIG. 14.
f Start each mounting bolt through the ceiling template and up into the unit base pan by hand. Install wood screw in each end of the ceiling template. This insures a tight fit of the return air cover to ceiling. See FIG. 14.

FIG. 14 Front of Vehicle

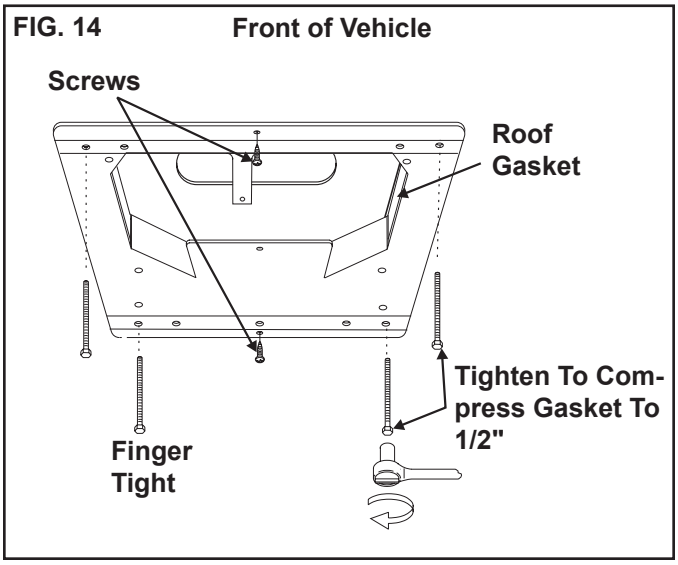

- **<u>EVENLY</u> tighten the bolts to a torque of 40 to 50 inch pounds. This will compress the roof gasket to approximately 1/2". The bolts are self locking so over tightening is not necessary. See FIG. 14.**

CAUTION

If bolts are left loose there may not be adequate roof seal or if over tightened, damage may occur to the unit base or ceiling template. Tighten to specifications listed in this manual.

2. Installation Of Divider Plate
   a Measure the ceiling to roof thickness:
   - If distance is 2.0" - 3-3/4", remove perforated tab from divider plate. See FIG. 15.
   - If distance is 3-3/4" - 5-1/2", remove no tabs.

b. Remove the backing paper from double sided tape located on ceiling template. See FIG. 15.

FIG. 15

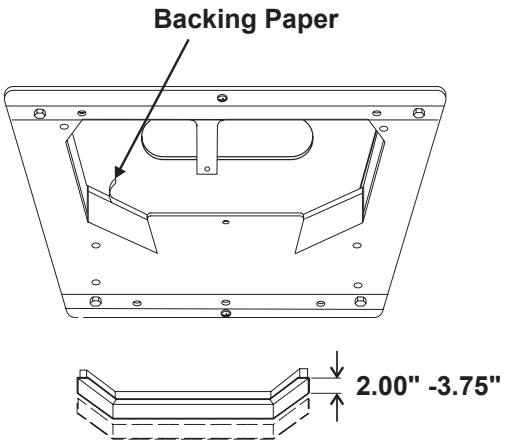

c. Place divider plate up to bottom of unit base pan firmly. The foam tape on the divider plate must seal to bottom of base pan. See FIG. 16.

CAUTION

Improper installation and sealing of divider plate will cause the compressor to quick cycle on the cold control. This may result in fuse or circuit breaker opening and/or lack of cooling.

FIG. 16

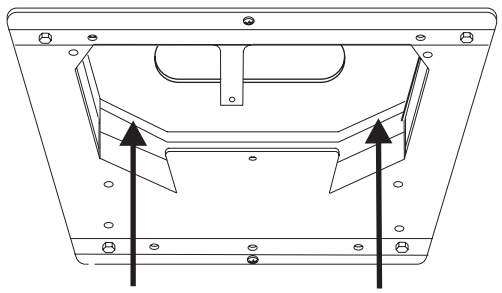

d. With slight pressure push the divider plate against the double sided tape on the ceiling template.

e. Locate the 1/8" x 7" x 18" self -adhesive insulation supplied with the return air kit. Remove the backing paper from the insulation and carefully stick onto the ceiling template divider plate. See FIG. 17.

Note: The adhesive on the insulation is extremely sticky. Be sure the part is located where desired before pressing into place.

FIG. 17

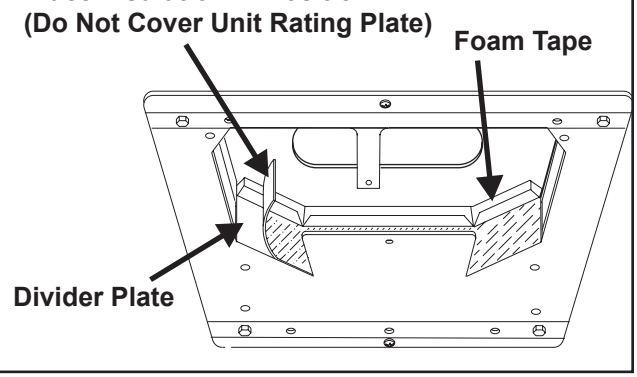

- Excess width is intended to seal the divider plate to the sides of the 14-1/4" x 14-1/4" (±1/8") opening. This is to help prevent cold air discharge from circulating into the unit return air opening.
- If the insulation is too high, stick excess height of insulation to the unit base pan. Do not cover up unit rating plate.

f. Place the electronic control box on the ceilingtemplate with the white 6 pin plug on the curb side of the RV. Do not attach at this time.

g. Plug the 6 pin electrical cord from the unit into the matching 6 pin connector in the electronic control box. The plug is polarized and will only fit in one direction.

h. Plug the freeze control into the matching black 2 pin connector in the electronic control box.

i. Insert the freeze control sensor into the evaporator coil fins approximately 1" above the bottom of the coil fins and on the left side as shown in FIG. 18. Bend fins over sensor to secure in place.

FIG. 18

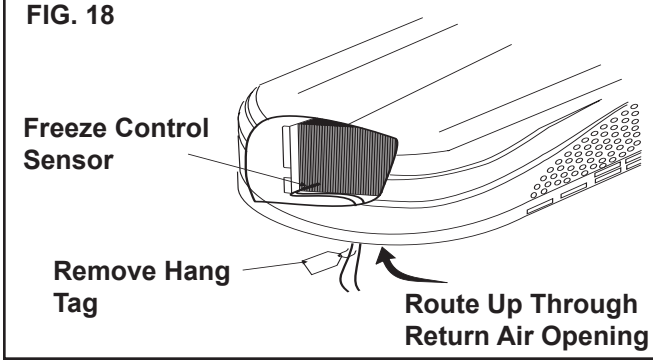

j. Plug the 6 Wire harness into the matching 6 pin connector in the electronic control box.

k. Attach electronic control box to template using the 2 blunt self-tapping screws provided in the electronic control kit. See FIG. 19.

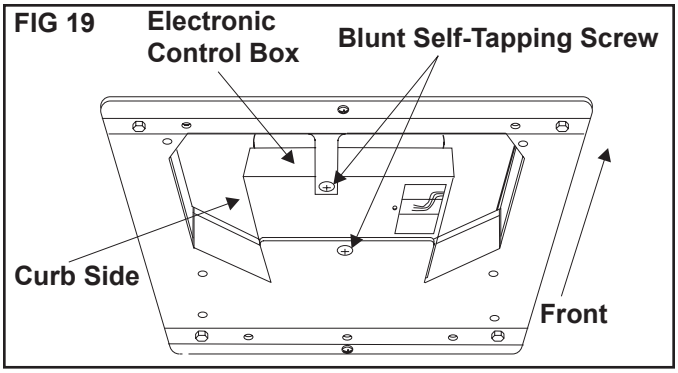

■ **Installing unit with 3308120.XXX Genesis Air Filtration System. For unit with 3105007.XXX or 3105935.XXX Return Air Grill, see page 10.**

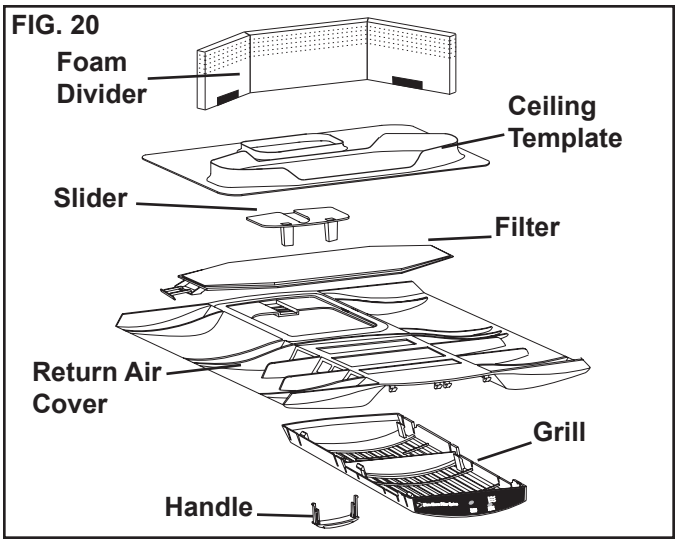

1. Installation Of Ceiling Template
   a. Check gasket alignment of the unit over the roof opening and adjust if necessary. Unit may be moved from below by slightly lifting. See FIG. 12.
   b. Remove return air cover, ceiling template, foam divider and air filter from the 3308120.XXX carton.
   c. All models listed in this manual will use a four (4) bolt pattern for installing the 3105007.XXX or 3105935.XXX return air kit template. These bolts along with the electronic control box cover are furnished in the electronic control kit part number 3312020.XXX.
   d. Reach up into the return air opening and pull the unit electrical cord down. See FIG. 13.
   e. Locate the foam divider and insert it corner to corner in the 14-1/4" x 14-1/4" (±1/8") opening with the adhesive tape up. (Do not remove paper to expose adhesive) The foam divider should be level with the ceiling (±1/4"). Tear off the excess at the pre-cut perforations in divider. See FIG. 21.

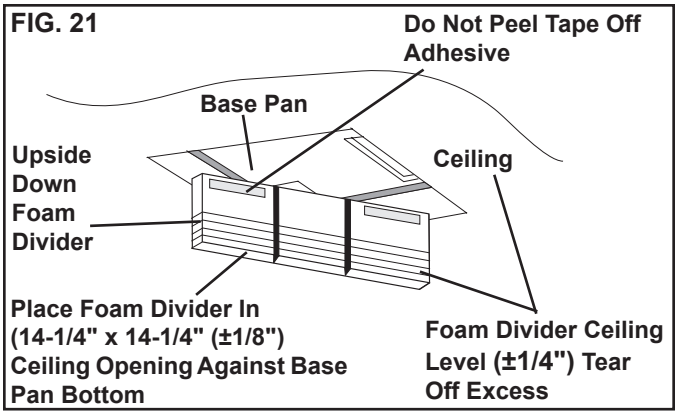

   f. Peel the paper off of the foam divider and stick it in place on the center of the rear flange of the return air opening on the ceiling template. See FIG. 22.

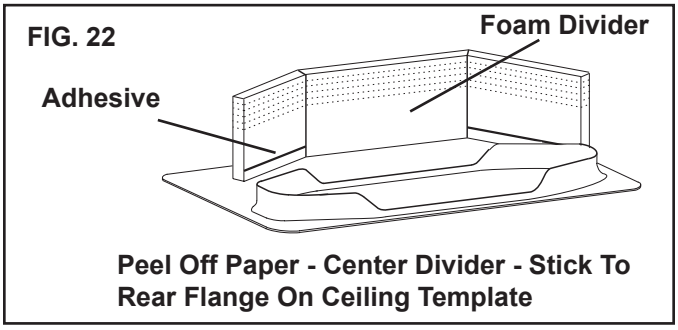

   g. Insert the freeze control sensor into the evaporator coil fins approximately 1" above the bottom of the coil fins and on the left side as shown in FIG. 18. Bend fins over sensor to secure in place.

Note: Set dip switches in electronic control box before proceding (see section I on page 14).

   h. Mount the electronic control box on the ceiling template using the 3 blunt self-tapping screws provided in the electronic control kit. See FIG. 23.

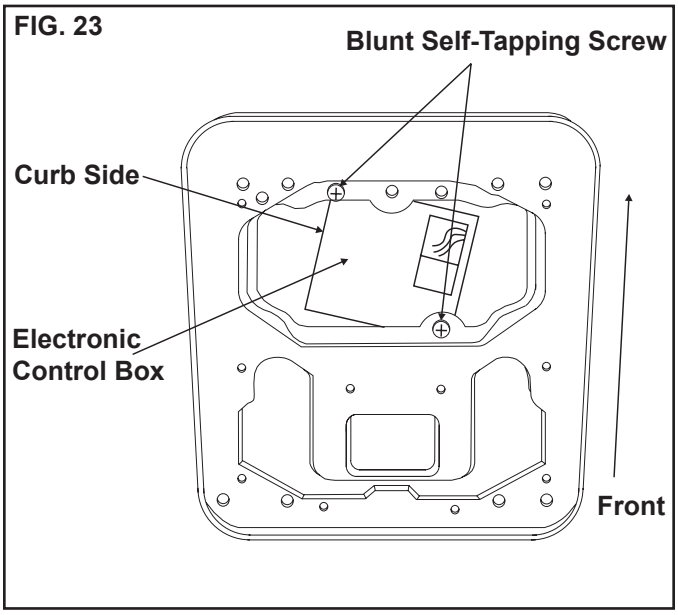

i. Hold the ceiling template up to the 14-1/4" x 14-1/4" (±1/8") opening.
j. Start each mounting bolt through the ceiling template and up into the unit base pan by hand. See FIG. 24.

FIG. 24

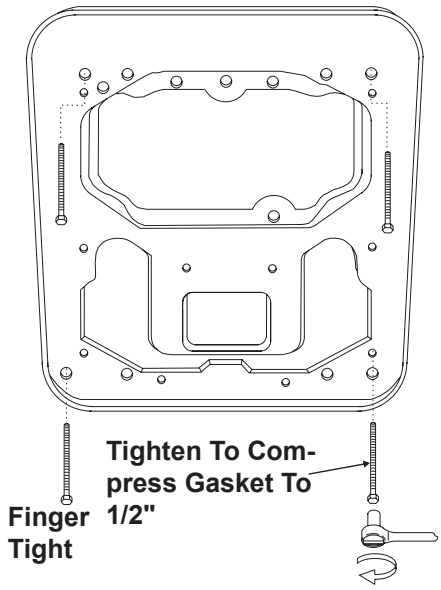

- **<u>EVENLY</u> tighten the bolts to a torque of 40 to 50 inch pounds. This will compress the roof gasket to approximately 1/2". The bolts are self locking so over tightening is not necessary. See FIG. 24.**

CAUTION

If bolts are left loose there may not be adequate roof seal or if over tightened, damage may occur to the unit base or ceiling template. Tighten to specifications listed in this manual.

k. Use Aluminum foil tape (not supplied) to seal the ends of the foam divider to the sides of the opening. Make sure the area behind the flange on the ceiling template is sealed. See FIG. 25.

FIG. 25 **Use Aluminum Foil Tape To Seal the Foam Divider To The Sides of 14-1/4" x 14-1/4" (±1/8") Ceiling Opening**

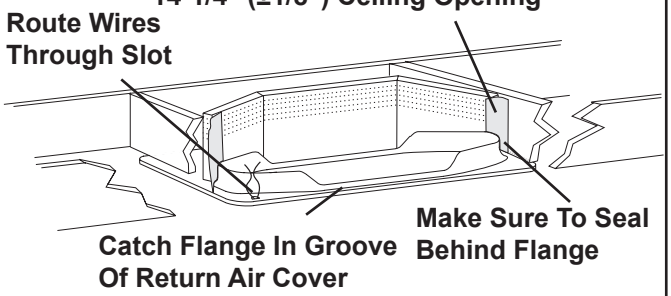

CAUTION

Improper installation and sealing of foam divider will cause the compressor to quick cycle on the cold control. This may result in fuse or circuit breaker opening and/or lack of cooling.

l. Plug the 6 pin electrical cord from the unit into the matching 6 pin connector in the electronic control box. The plug is polarized and will only fit in one direction.
m. Plug the freeze control into the matching black 2 pin connector in the electronic control box.
n. Plug the 6 Wire harness into the matching 6 pin connector in the electronic control box.

H. Wiring The System

Reach up into the return air opening and pull the remaining wires down. See FIG. 13

1. Low Voltage Wire Connections

CAUTION

Disconnect the positive (+) 12 VDC terminal at the supply battery. Damage to equipment could occur if the 12 VDC is not shut off.

Note: If a solar panel is installed see instructions packaged with solar panel option.

Note: If using the Genesis Air Filtration System, step "a" is to be completed when installing the decorative cover.

a. Connect the previously run 12 VDC wires to the red and black wires in the 6 wire harness. Connect +12 VDC to the red wire; –12 VDC to the black wire. (Do not connect wires if using the 3308120.XXX Genesis Air Filtration System) See Section J Decorative Cover Installation (Installing unit with 3308120.XXX Genesis Filtration System).
b. Connect the previously run furnace thermostat wires (if applicable) to the blue wires in the 6 wire harness. The polarity of these connections does not matter.
c. Terminate the 4 conductor communication cable(s) protruding into the 14-1/4" x 14-1/4" (±1/8") roof opening. The cable(s) must be terminated with a telephone RJ-11-6C4P connector. Refer to the crimp tool manufacturer for crimping instructions.

Important: RJ-11-6C4P connectors must be installed as shown in FIG. 6A & 6C.

d. Plug the 4 conductor communication cable into one of the RJ-11-6C4P telephone couplers in the electronic control box. It doesn't matter which one.
e. Plug the remote temperature sensor cable into the matching white 2 pin connector in the electronic control box.
f. Plug the outdoor temperature sensor (heat pump models only) into the white matching 2 pin connector in the electronic control box.
g. Connect the previously run Energy Management System wires (if applicable) to the yellow wires in the 6 wire harness. The polarity of these connections does not matter.
h. If an automatic generator start (AGS) kit is installed, follow installation instructions furnished with AGS kit.

2. 120 VAC Power Supply Connection

⚠ WARNING

Disconnect 120 VAC. Failure to follow these instructions could create a shock hazard causing death or severe personal injury.

Note: Wiring **must** comply with NFPA 70: National Electrical Code regulations and any State or Local Codes or regulations.

a. Route power supply line through Romex connector and into the electronic control box. Tighten connector making sure not to pinch or short wiring.

⚠ WARNING

This product is equipped with a 3 wire (grounded) system for protection against shock hazard. Make sure that the unit is wired into a properly grounded 120 VAC circuit and the polarity is correct. Failure to do so could result in death, personal injury or damage to the equipment.

b. Connect white to white; black to black; and green to green or bare copper wire using appropriate size connectors.
c. Tape the connectors to the supply wire to assure they don't vibrate off.
d. Push the wires into the electronic control box.

I. System Configuration, Reset & Check Out

Now that the system is installed, it is necessary to do a system configuration, reset and check out

1. Electronic Control Configuration
Depending on the equipment options installed by the recreational vehicle manufacturer, the appropriate dip switches will need to be switched to the “ON” position. Placing the switch in the “ON” position selects that option. See FIGS. 26, 27 & 28.

FIG. 26

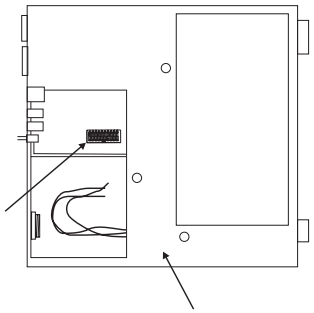

Note: Dip switches are in the "OFF" position when shipped from the factory. They are visible through the opening in the electronic control box. See FIGS. 26, 27 & 28.

FIG. 27

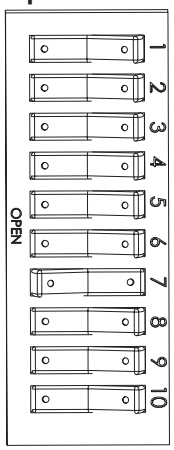

a. Ext. Stage - Ext. Stage is not used on this unit. Leave in the “OFF” position.
b. Zone selection - Each Comfort Control Center thermostat can have up to 4 zones. When only one unit is installed it becomes Zone 1 and no dip switch setting is required. Each additional unit must be assigned a zone (2 through 4). Each unit must have a different zone setting.
c. Stage selection - Stage is not used on this unit. Leave in the “OFF” position.
d. Heat Strip - Heat strip not used in these models. Leave in the “OFF” position.
e. Heat Pump - If unit is a heat pump, the heat pump dip switch # 7 must be placed in the “ON” position.

f. Furnace - If a Furnace/Aqua heat system has been connected to this unit, the furnace dip switch must be placed in the “ON” position.
g. Dehumidify - Dehumidify is not used on this unit. Leave in the “OFF” position.
h. Gen start selection - Leave in the “OFF” position.
i. Install electronic control box cover.
j. Repeat this procedure for each additional zone.

FIG. 28

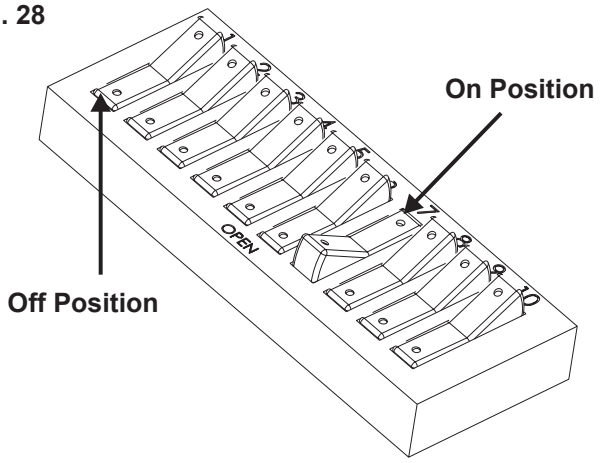

2. System Reset
After setting the dip switches in the electronic control, do a system reset.
   a. Reconnect the 12 VDC and 120 VAC power supplies.
   b. Make sure the Comfort Control Center thermostat is in the **OFF** mode.
   c. Simultaneously press the **MODE** and **ZONE** buttons. The LCD will display “IniT” and all available zones.
   d. Release the **MODE** and **ZONE** buttons.
   e. Press the **ON/OFF** button to exit system set up.
   f. When a dip switch is turned on after initial configuration, a system reset will need to be done before the Comfort Control Center thermostat will recognize the updated selection.
3. System Checkout
Verify that all features of the installed system work. See Comfort Control Center thermostat Operating Instructions or User’s Guide. Check fan speeds, cooling mode, heat pump mode, and furnace mode (if connected). If the features do not work disconnect the 12 VDC and 120 VAC power supplies and verify that all wiring is correct and that the correct dip switches have been turned on.

J. Decorative Cover Installation

■ **Installing unit with 3105007.XXX or 3105935.XXX Return Air Grill. For Genesis Air Filtration System see below.**
1. Remove the return air grill from the return air cover.
2. Place the return air cover up to the ceiling template.
3. Install cover to template with # 8 x 3/8" blunt point Phillips head screws provided (6 required).
4. Reinstall filter return air grill into return air cover. Align tabs with mating notches and snap into place
5. Install two hole plugs into screw holes in back of return air cover. See FIG. 29.

FIG. 29

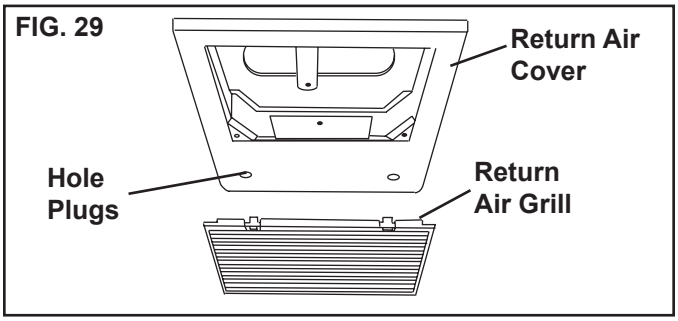

6. This completes the unit installation.

■ **Installing unit with 3308120.XXX Genesis Air Filtration System. For 3105007.XXX or 3105935.XXX Return Air Grill see above.**
1. Install the slider in the return air cover and raise it to the ceiling template. See FIG. 30.

FIG. 30

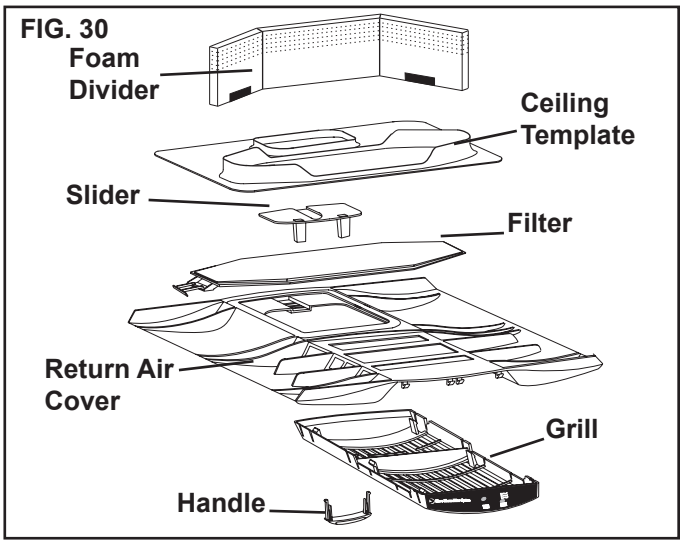

2. Route the wires from the return air cover through the template slot leaving about 3" between, and position wire here so they can be reached after plastic cover is installed. See FIG. 25.

3. Place the front of the return air cover against the ceiling and slide towards the rear. The flange on the ceiling template will catch in the groove on the return cover. Adjust the position (right to left) and install the front two screws. Start and tighten the remaining screws to hold it in place.
4. Connect together the wires from the thermostat, electronic control box and filter indicator.

Note: If solar panel is installed see instructions packaged with solar panel option.

a. Connect the red wire from the 6 wire harness and the red wire from the filter indicator light with the red positive 12 VDC supply wire. See FIG. 25.
b. Connect the black wire from the 6 wire harness and the black wire from the filter indicator light with the black negative 12 VDC supply wire. See FIG. 25.

Note: Number 10 cabinet screw can be used to replace the two front screws to hold the plastic cover flush to the ceiling, if required.

5. Tighten the screws holding the return air cover. Slide the filter from the right side (looking toward the RV front) under the wires. Make sure the wires are secured above the filter and are out of its way.
6. Place grill on return air cover and snap in place. Decal is on end over circuit board.
7. Place slide handle through slots in grill into the slide posts. Handle will fit in either direction.
8. This completes the unit installation.

K. Furnace/Aqua Temperature Differential Setting

This system can be configured to operate using an ON/OFF differential of either 1 degree F. or 2 degree F.

1. To set the differential, simultaneously press the **PROGRAM** button and the ∧ up button on the Comfort Control Center thermostat. “diF1” will appear in the display while the buttons are pressed. See FIG. 31. To set the 2 degree differential, simultaneously press the **PROGRAM** button and the ∨ down button. “diF2” will appear in the display while the buttons are pressed.

FIG. 31

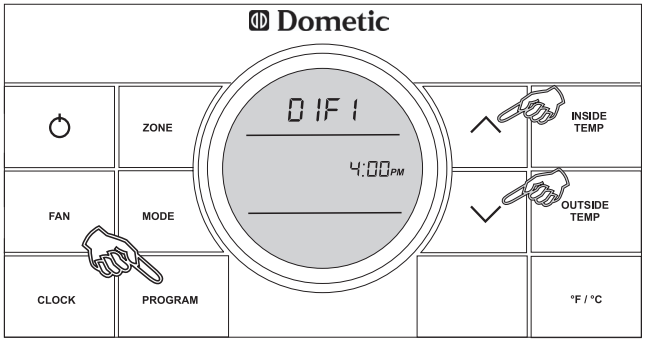

FIG. 32

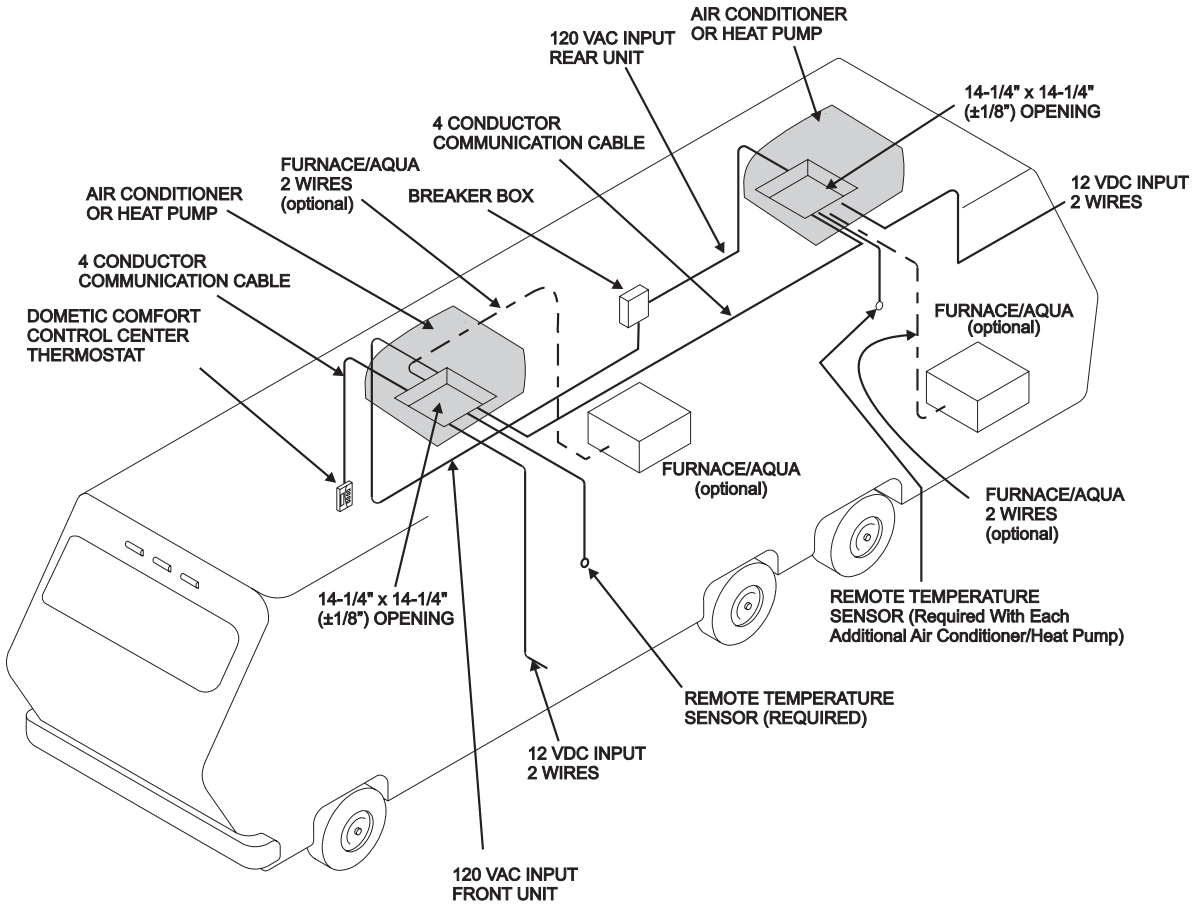
AIR CONDITIONER
OR HEAT PUMP
120 VAC INPUT
REAR UNIT
14-1/4" x 14-1/4"
(±1/8") OPENING
4 CONDUCTOR
COMMUNICATION CABLE
FURNACE/AQUA
2 WIRES
(optional)
BREAKER BOX
12 VDC INPUT
2 WIRES
AIR CONDITIONER
OR HEAT PUMP
4 CONDUCTOR
COMMUNICATION CABLE
DOMETIC COMFORT
CONTROL CENTER
THERMOSTAT
FURNACE/AQUA
(optional)
FURNACE/AQUA
(optional)
FURNACE/AQUA
2 WIRES
(optional)
14-1/4" x 14-1/4"
(±1/8") OPENING
REMOTE TEMPERATURE
SENSOR (Required With Each
Additional Air Conditioner/Heat Pump)
REMOTE TEMPERATURE
SENSOR (REQUIRED)
12 VDC INPUT
2 WIRES
120 VAC INPUT
FRONT UNIT

UNIT FIELD WIRING DIAGRAM (AIR CONDITIONER)

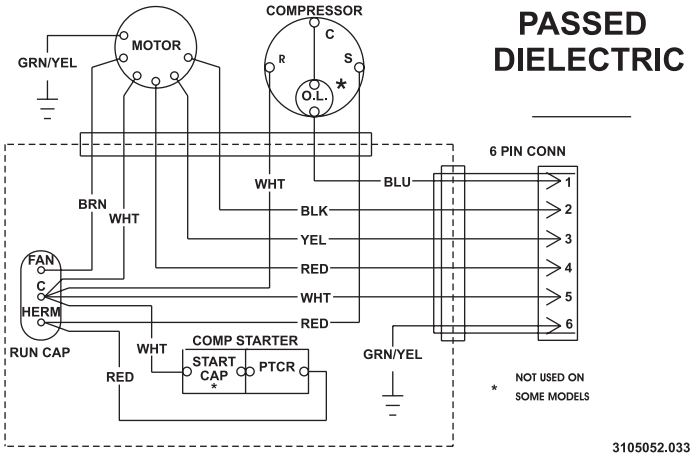

UNIT FIELD WIRING DIAGRAM (HEAT PUMP)

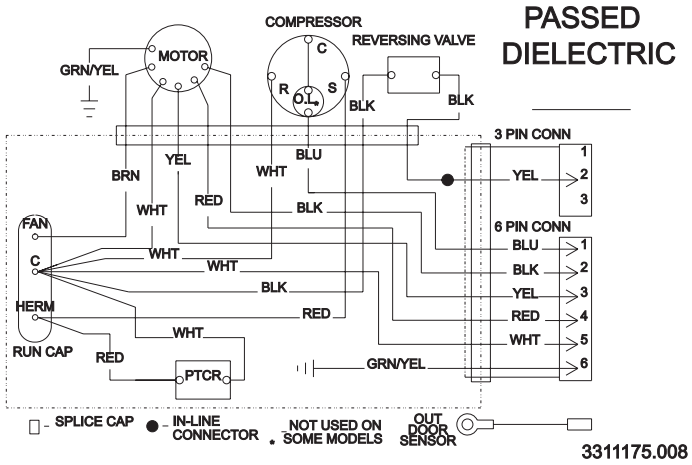
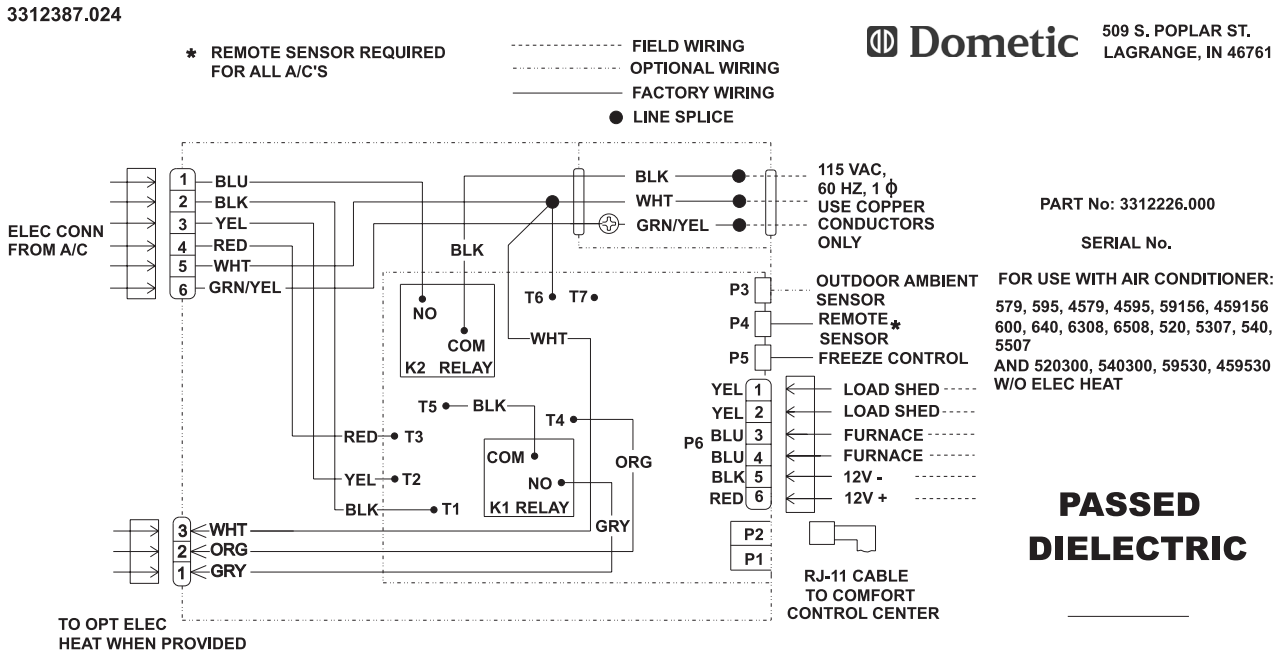
3312020.000 ELECTRONIC CONTROL KIT WIRING DIAGRAM