Dometic

When ordering parts, always state:
MODEL NO. - PRODUCT NO. - QUANTITY - PART NUMBER - DESCRIPTION
For Electric Details also state:
VOLTAGE - WATTAGE

PARTS LIST
RM1350

USA
SERVICE OFFICE
Dometic, LLC
2320 Industrial Parkway
Elkhart, IN 46516
574-294-2511

CANADA
Dometic, LLC
46 Zatonske Unit 3
Brantford, ON N3T 5L8
CANADA
519-720-9578

For Service Center Assistance Call:
800-544-4881

Product NO	Model	Voltage	Refrigerator Frame Color	Door Style	Door Trim Color	Market	Brand
921148335	RM1350	120 V	Black	Surround	Black	USA/Canada	Dometic

PARTS LIST

MODEL RM1350

3312710.000

Form No. 3312710.000 6/08

©2008 Dometic, LLC
LaGrange, IN 46761

ALPHABETICAL INDEX

	Page	Pos. No
Cabinet, exterior components	1-2	1-112
Door Asm.	3-4	4-62
Cabinet, interior components	5-6	3-106
Ice maker	7-8	11-130
Control & Burner components	9-10	1-253
Cabinet, rear view	11-12	9-999
Ice container	13-14	1-31
Dispenser	15-16	1-26
Wiring Diagram	17	--

SPECIFICATIONS

PRODUCT NO.*	921148335
Energy Source **	120VAC/GAS
AC Heating Element	
Watts	420
Ohms	34.3
Amperage	3.5
BTU's Gas Burner	2080
Jet Size	# 76
Flue Baffle	
Size	6" x 15/16"
Position Above Burner	1-1/4"
Ice bucket	0
Crispers	3
Bottle Holders	2
Climate Control Heater, light, flap, and 2 fans	
Watts	36
Ohms	4
Amperage	3

* Product number located on refrigerator data plate.
** 12 volt DC power is required to operate the refrigerator controls on all models.

709046T

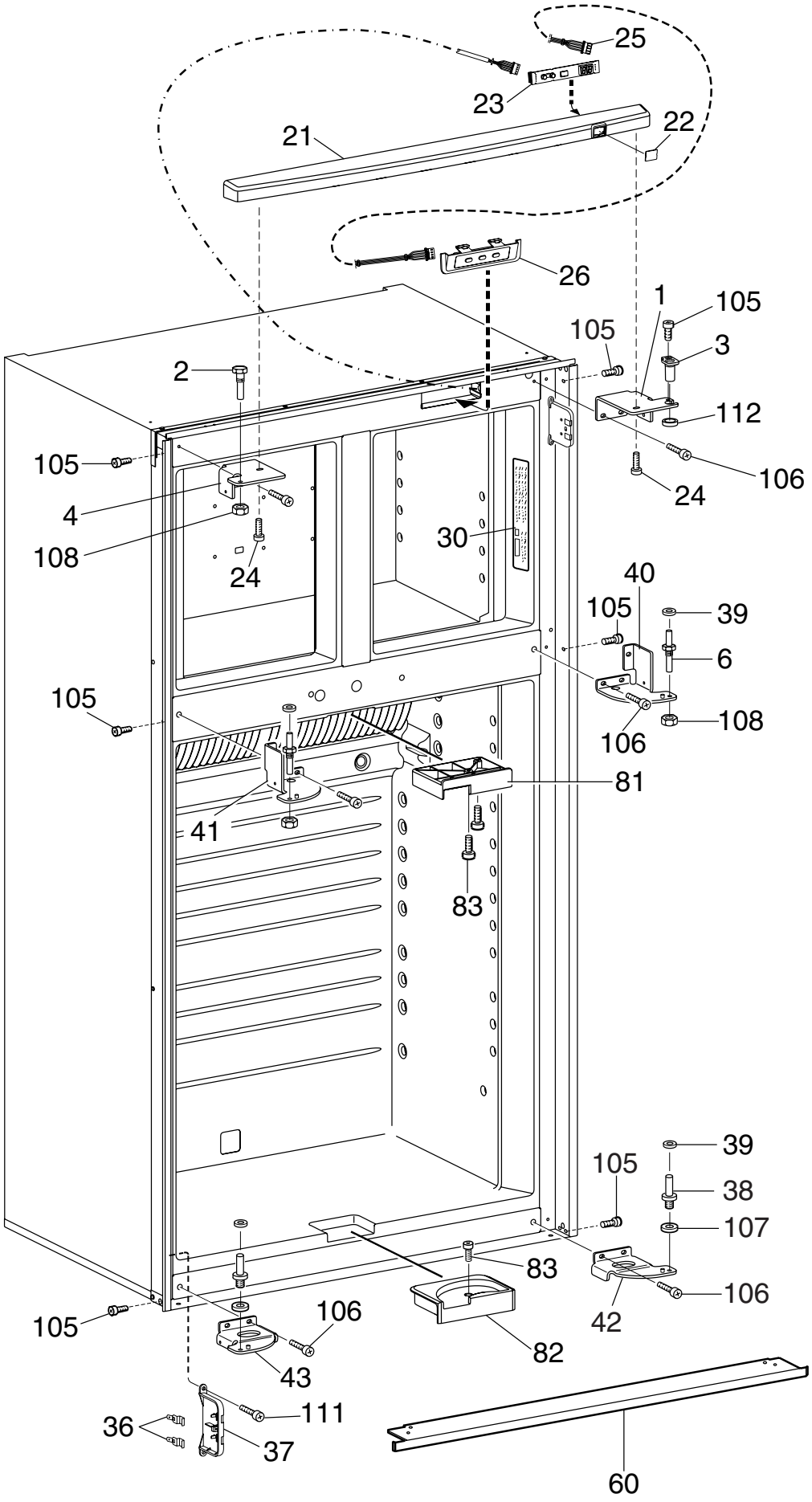

PCMOB3007482

© Dometic

Exploded view no.: PCMOB3007482
P00003007579

Matrix	PNC	ELC	ProdDate	Model
A	921148335	00	20080519	RM1350

Pos	Part No.	Matrix	Description
1	3851364012	A	Hinge,black
2	2932647015	A	Hinge pin,upper
3	3850801014	A	Hinge pin
4	3850989017	A	Hinge,black
6	2932648021	A	Hinge pin,black
21	3851073019	A	Front,black
22	3850970017	A	Lens
23	3850969019	A	Pcb
24	3858006012	A	Screw,PT PH4x10
25	2954568016	A	Harness
26	3850964010	A	Control panel,cpl.
30	3851035000	A	Instruction plate
36	3851212013	A	Contact plate
37	3851211015	A	Holder
38	2932649029	A	Hinge pin
39	3858010022	A	Washer,black,5,5X12X1
40	3851230049	A	Hinge,cpl.
41	3851230031	A	Hinge,cpl.
42	3851230023	A	Hinge,cpl.,lower
43	3851230015	A	Hinge,cpl.,lower
60	2932664093	A	Base cover,black
81	3851102016	A	Guiding device,upper
82	3851103014	A	Guiding device,lower
83	3858002300	A	Screw,RXS 4.2X25
105	3858004041	A	Screw,MRX 4x6 FZ
106	3858039104	A	Screw,black,MRX-TT M4x10
107	3858010113	A	Washer,zinc-plated,BRB 6,4X12,5
108	3858009057	A	Nut,black,ML6 M6
111	3858002201	A	Screw,zinc-plated,RXS B8X9,5
112	3858098019	A	Washer,black,plastic

© Dometic

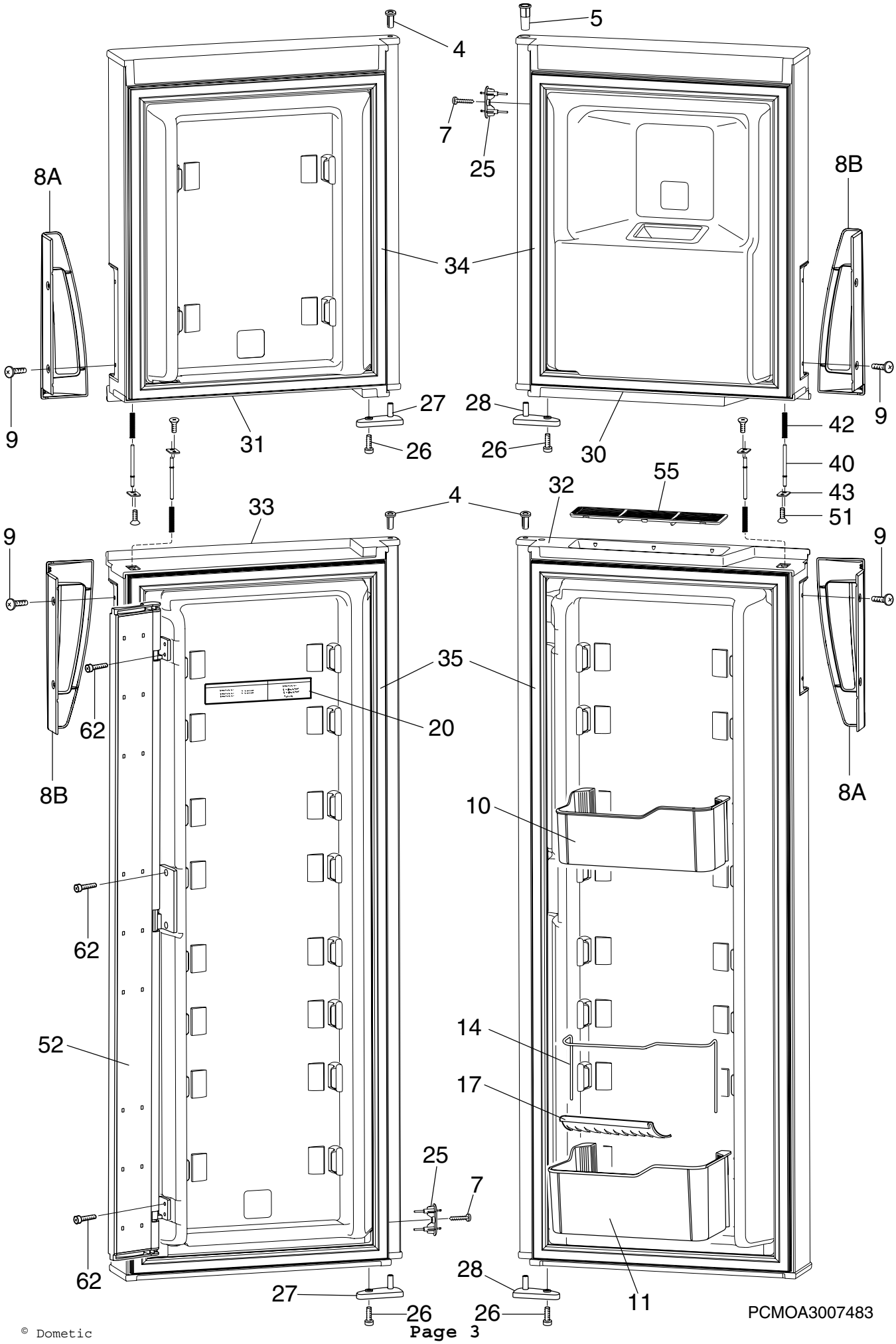
4
5
7
25
8A
8B
34
9
9
27
28
31
26
26
30
42
40
55
32
43
33
4
51
9
9
35
62
20
8B
8A
10
62
52
14
17
25
7
62
28
27
26
26
11
PCMOA3007483

© Dometic

Exploded view no.: PCMOA3007483
P00003007580

Matrix	PNC	ELC	ProdDate	Model
A	921148335	00	20080519	RM1350

Pos	Part No.	Matrix	Description
4	2931171066	A	Hinge bushing,black
5	3851412019	A	Hinge bushing,black
7	3858002102	A	Screw,zinc-plated,RXS B4X9,5
8A	3851159032	A	Handle
8B	3851159040	A	Handle
9	3858089018	A	Screw,black,EML 5X10
10	3850973011	A	Door shelf,transparent
11	3851052013	A	Door shelf,transparent
14	3850976022	A	Rack
17	2932658046	A	Bottle holder,white,L=130mm, (5-1/8")
20	3851235006	A	Label
25	3851214019	A	Contact pin,cpl.
26	3858006061	A	Screw,ETP PH 3,5X10
27	3851244016	A	Door stop,left
28	3851244024	A	Door stop,right
30	3851169148	A	Freezer door,with,gasket,right
31	3851169080	A	Freezer door,with,gasket,left
32	3851170203	A	Refrigerator door,with,gasket,right
33	3851170112	A	Refrigerator door,with,gasket,left
34	3851228027	A	Door gasket,Freezer
35	3851228019	A	Door gasket,refrigerator
40	3851092019	A	Lock bar
42	3850497011	A	Spring
43	3850496013	A	Plate
51	3858071024	A	Screw,black,ETP 40X14
52	3851104038	A	Flap,cpl.
55	3851338016	A	Grating
62	3858002276	A	Screw,zinc-plated,RXS B8, 4,2x16

© Dometic

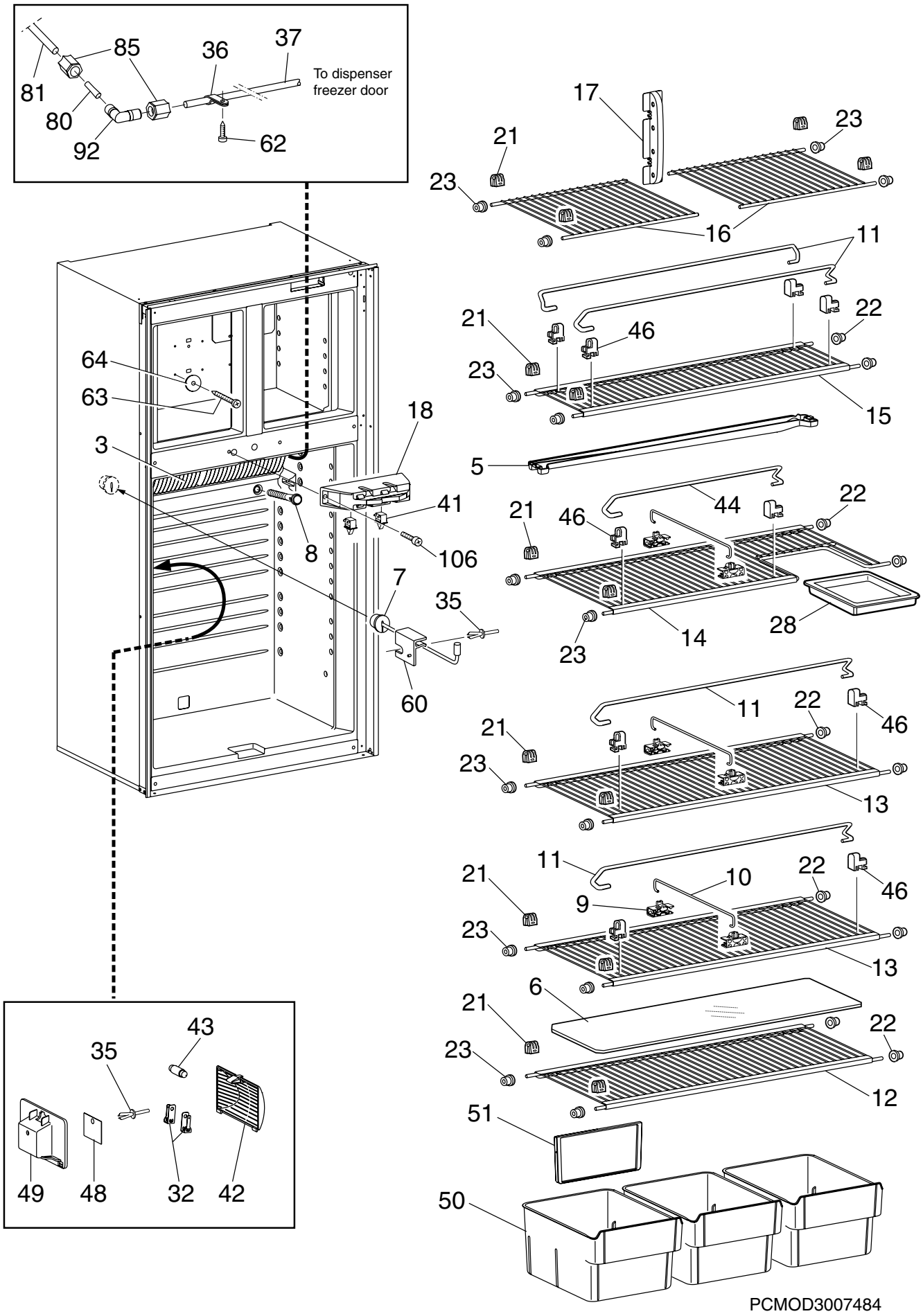
85
36
37
To dispenser freezer door
81
80
92
62
17
21
23
16
11
22
46
15
64
63
18
3
5
41
8
106
44
7
35
28
14
60
13
10
9
6
12
51
50
43
49
48
32
42
PCMOD3007484

© Dometic

Exploded view no.: PCMOD3007484
P00003007581

Matrix	PNC	ELC	ProdDate	Model
A	921148335	00	20080519	RM1350

Pos	Part No.	Matrix	Description
3	3851166011	A	Cooling flange
5	3851050017	A	Drop tray,transparent
6	2931117226	A	Shelf,plastic
7	2002301006	A	Cover
8	3851229017	A	Drain,pipe
9	3851208011	A	Holder,sliding type
10	3851209019	A	Rack
11	2007337252	A	Rack
12	3851236012	A	Shelf,wire,cpl.
13	3851236020	A	Shelf,wire,cpl.
14	3851237010	A	Shelf,wire,cpl.
15	3851236038	A	Shelf,wire,cpl.
16	3851023014	A	Shelf,wire
17	3851153019	A	Shelf support,rear
18	3851075014	A	Door,latch,cpl.
21	2932102011	A	Shelf support
22	2932101013	A	Plug
23	2932103019	A	Plug
28	2932636018	A	Box
32	2932108018	A	Contact pin
35	165521030	A	Expansion rivet
36	2932463025	A	Hose clamp,white
37	3851108021	A	Hose,water
41	3851000012	A	Switch
42	3850962014	A	Lamp glass
43	2007290006	A	Lamp,10W,12V
44	2007337179	A	Rack
46	2930693045	A	Holder
48	3850963012	A	Reflector
49	3850961016	A	Lamp housing
50	3851089015	A	Crisper,transparent
51	3851090013	A	Divider
60	3850679014	A	Bracket,thermistor
62	3858002268	A	Screw,RXS B8X19
63	3858036027	A	Screw,KFXS 4.8X55
64	3858010147	A	Washer,aluminium,5.2x22x1.5
80	3108708185	A	Insert,Inlet
85	3851117014	A	Nut,1/2"
92	3851410013	A	Connection,90°
106	3858039104	A	Screw,black,MRX-TT M4x10

© Dometic

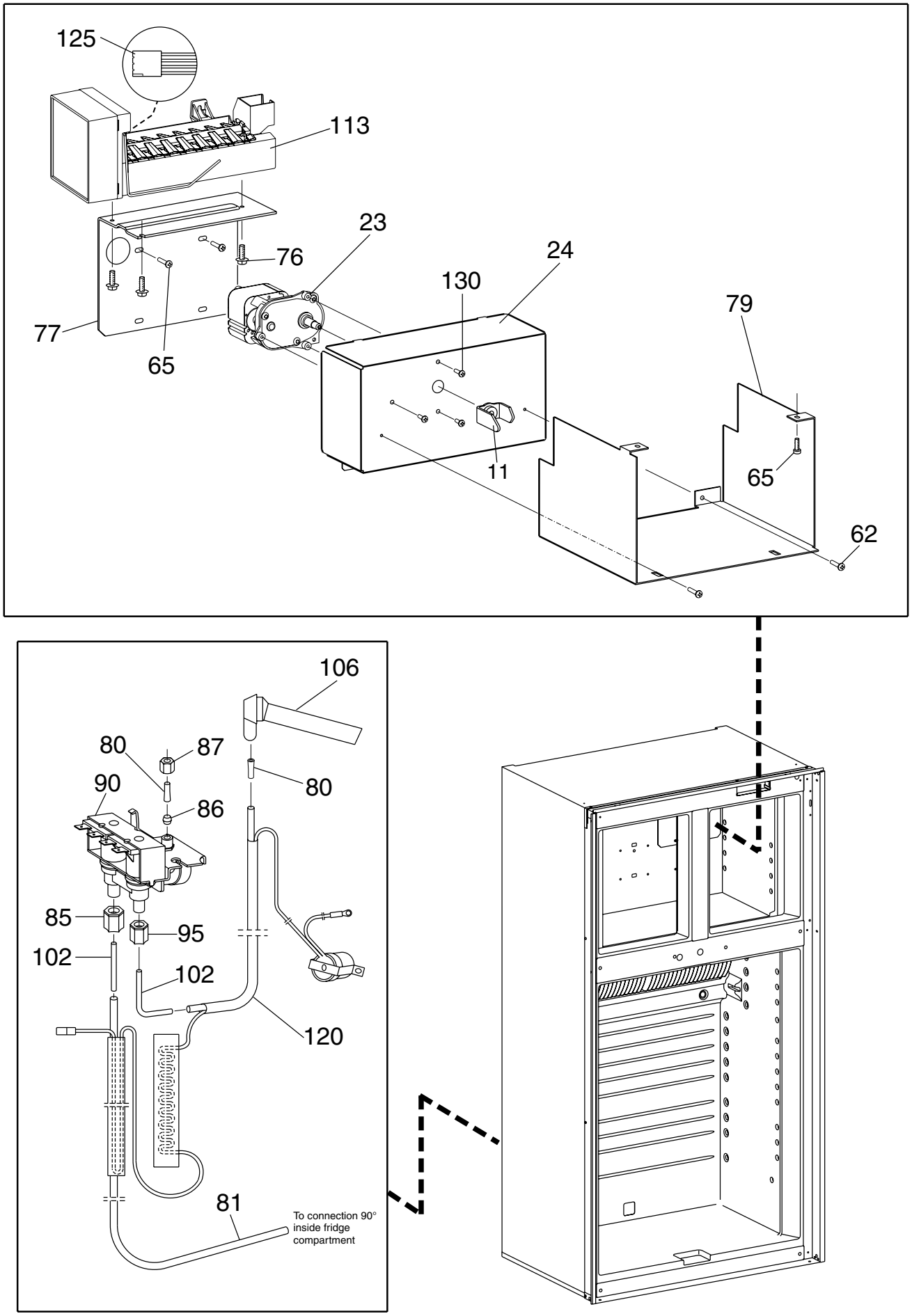

PCMOJ3007485

Exploded view no.: PCMOJ3007485
P00003007582

Matrix	PNC	ELC	ProdDate	Model
A	921148335	00	20080519	RM1350

Pos	Part No.	Matrix	Description
11	3851319016	A	Drive,Bar
23	3850838024	A	Motor,120V
24	3851366017	A	Motor bracket
62	3858002268	A	Screw,RXS B8X19
65	3858004173	A	Screw,stainless,MRX, M4X10
76	3108709027	A	Screw
77	3851142020	A	Shelf,ice-maker
79	3851365019	A	Shelf,ice container
80	3108708185	A	Insert,Inlet
81	3851127047	A	Hose,water
85	3851117014	A	Nut,1/2"
86	3108706296	A	Ferrule,Inlet
87	3108706288	A	Nut,brass,Inlet
90	3851116024	A	Valve,water,2-ways
95	2930839010	A	Nut,7/16"
102	3850220017	A	Insert,copper,water inlet valve
106	3851203012	A	Filling tube,ice-maker
113	3108705553	A	Ice-maker
120	3850688049	A	Kit,heater,water inlet valve
125	2954597015	A	Harness,ice-maker
130	3858039013	A	Screw,MRX-TT/SW 4x8

© Dometic

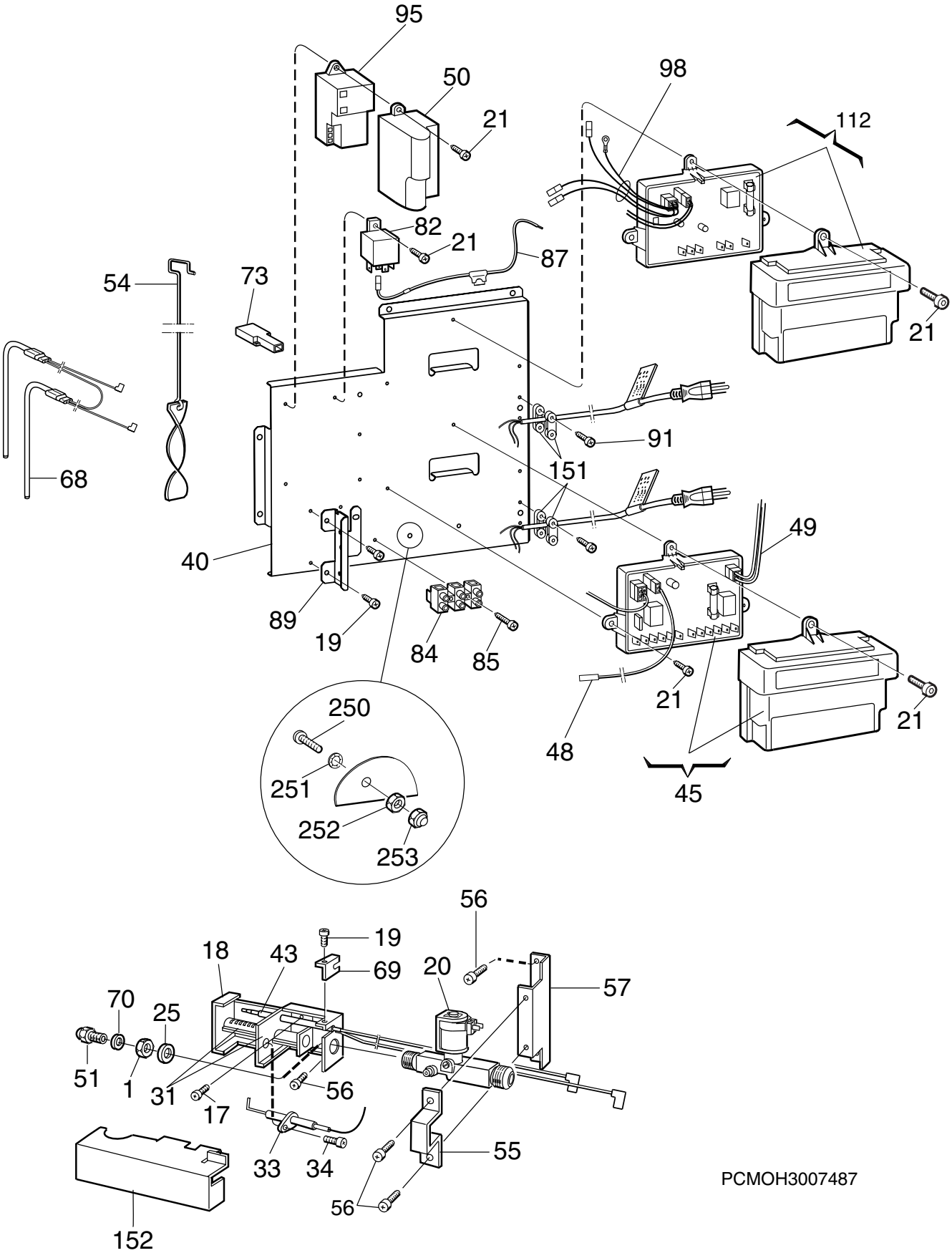
95
50
21
98
112
82
21
87
54
73
21
91
151
68
49
40
89
19
84
85
21
21
250
48
251
45
252
253
56
19
18
43
69
20
57
70
25
51
1
31
17
56
33
34
55
56
152
PCMOH3007487

Exploded view no.: PCMOH3007487
P00003007584

Matrix	PNC	ELC	ProdDate	Model
A	921148335	00	20080519	RM1350

Pos	Part No.	Matrix	Description
1	140207044	A	Nut
17	3858039039	A	Screw,zinc-plated,MRX M4X8
18	2932161017	A	Burner housing
19	3858002144	A	Screw,zinc-plated,RXS B6X9,5
20	2932615020	A	Solenoid valve
21	3858002151	A	Screw,zinc-plated,RXS B6X13
25	3858010071	A	Washer,12,5X18,5X1
31	955001672	A	Burner pipe,complete
33	2932781046	A	Electrode
34	3858002052	A	Screw,zinc-plated,RXS B6X6,5
40	3851383012	A	Bracket
43	2931826032	A	Thermocouple
45	3851005029	A	Power,module
48	3851059042	A	Conductor,thermistor
49	2954539058	A	Conductor,solenoid valve
50	2931886010	A	Cover
51	2007419332	A	Jet,nr 76
54	2932667054	A	Flame spreader
55	2932662014	A	Bracket
56	3858039047	A	Screw,zinc-plated,MRX M4X10
57	2932043017	A	Support plate
68	3850644539	A	Heater,120V, 2 x 210W
69	3851342018	A	Bracket,thermocouple
70	2007457001	A	Washer,0,5mm
73	2931963017	A	Connector,Y
82	3851334007	A	Relay
84	3858022027	A	Terminal block
85	3858002185	A	Screw,zinc-plated,RXS B6X25
87	2954553034	A	Wire,with,fuse
89	3851199012	A	Bracket,water,valve
91	3858002177	A	Screw,zinc-plated,RXS B6X19
95	2931132019	A	Spark generator
98	2954598013	A	Harness
112	3851378012	A	Control unit
151	561014010	A	Cable clamp
152	2931401018	A	Cover
250	3858004033	A	Screw,zinc-plated,MRX M4X16
251	3858011012	A	Lock washer,zinc-plated,4,3X8
252	3858009016	A	Hexagon nut,zinc-plated,M4X3,2
253	3858028024	A	Lock nut,zinc-plated,M4

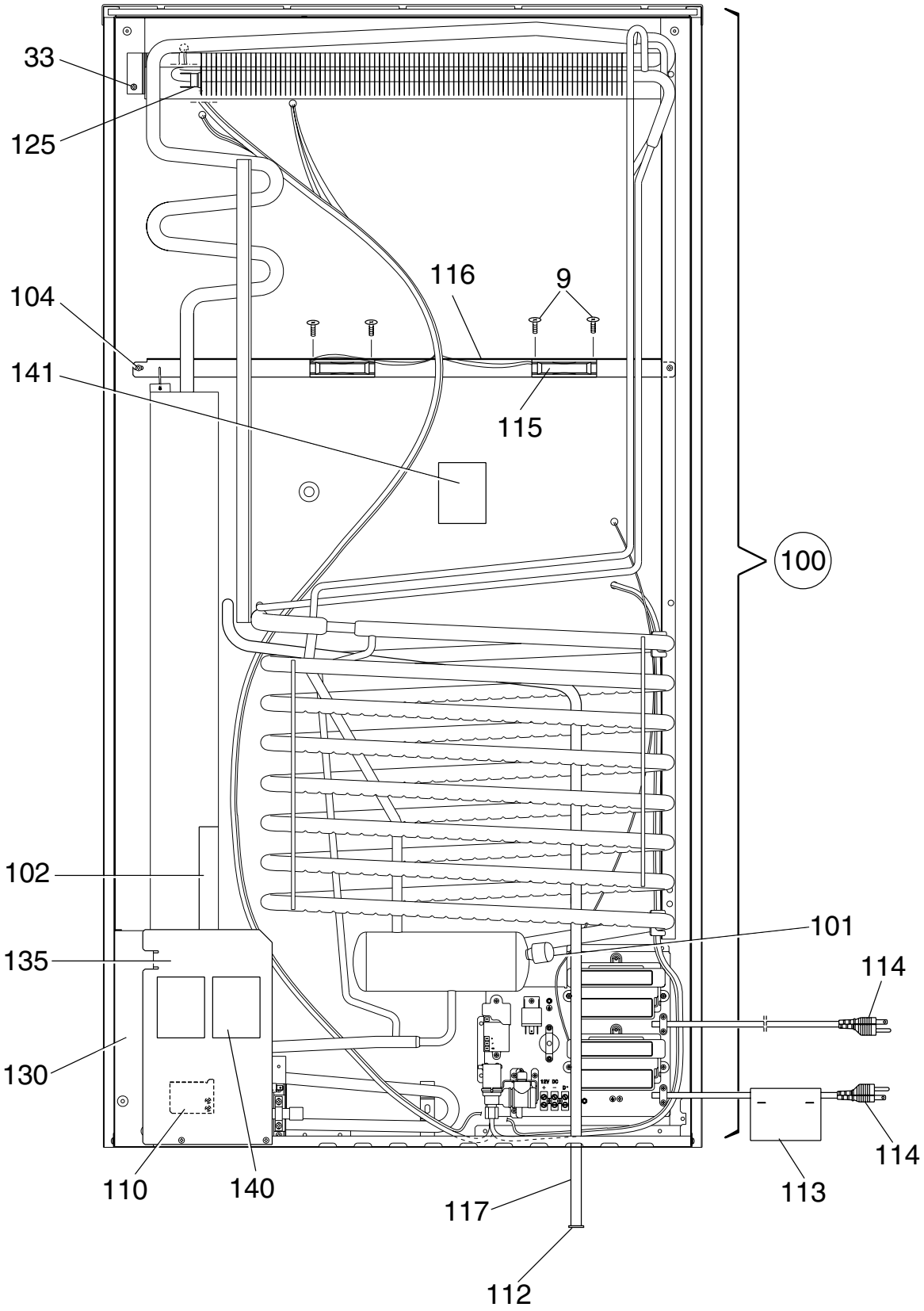

PCMOE3007488

Exploded view no.: PCMOE3007488
P00003007585

Matrix	PNC	ELC	ProdDate	Model
A	921148335	00	20080519	RM1350

Pos	Part No.	Matrix	Description
9	3858089018	A	Screw,black,EML 5X10
33	3858039096	A	Screw,zinc-plated,MRX M5X14
100	2934949104	A	Cooling unit,with,thermal fuse,949
101	173228008	A	Cap
102	2933557023	A	Flap
104	3858068012	A	Screw,DK 4.8X16
110	3850600010	A	Protection,blow-out
112	2932115013	A	Discharge pipe,plug
113	2932733005	A	Label
114	2002699110	A	Cord set
115	3851183016	A	Fan
116	3851390025	A	Bracket,fan
117	2932749100	A	Drainage hose,L1850
125	3850306063	A	Thermal fuse
130	3851204010	A	Base plate,rear
135	2932155019	A	Support plate
140	3850582002	A	Label
141	3850583000	A	Label
999	8251292002	A	User manual
			not shown

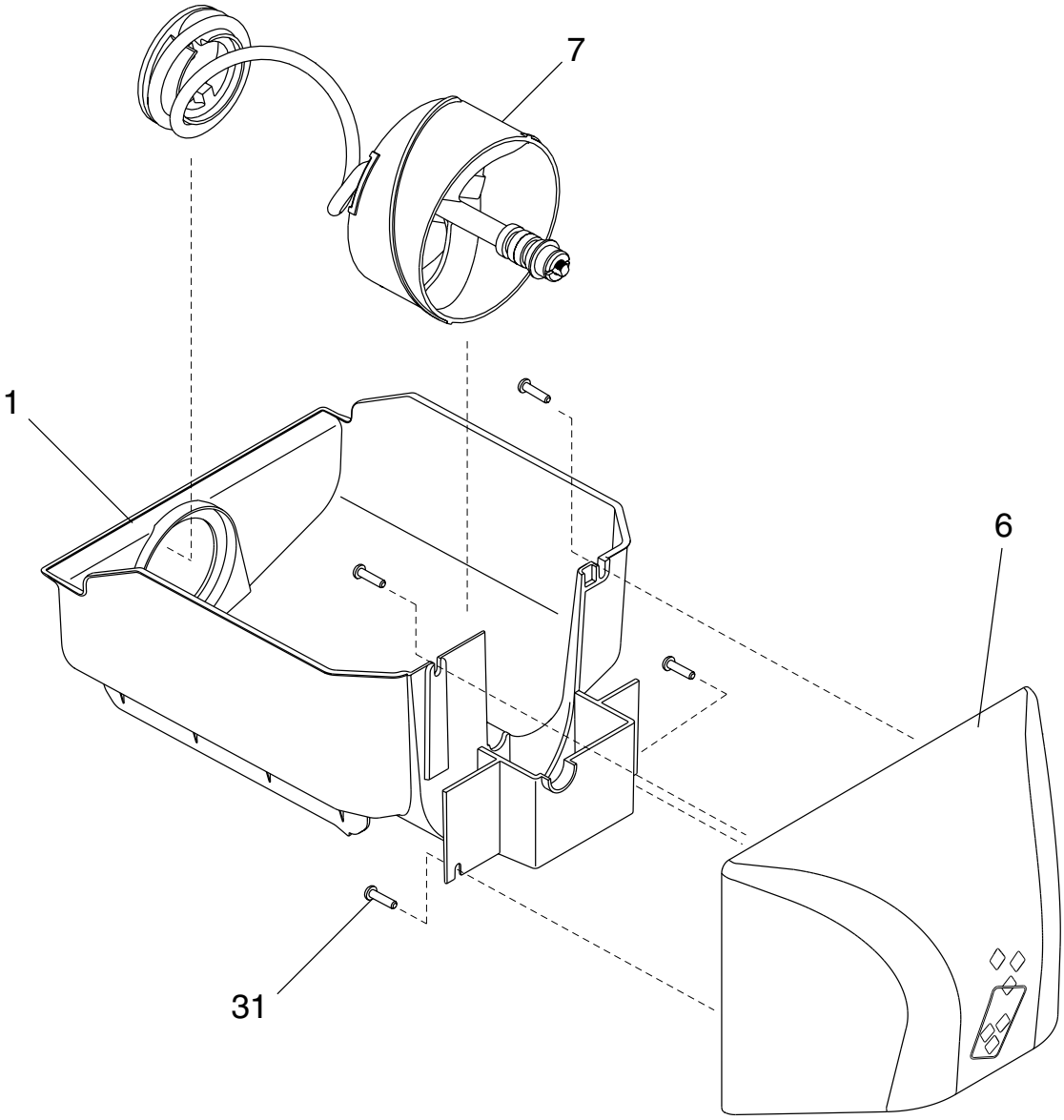

PCMO3007489

Exploded view no.: PCMO3007489
P00003007586

Matrix	PNC	ELC	ProdDate	Model
A	921148335	00	20080519	RM1350

Pos	Part No.	Matrix	Description
1	3851343016	A	Ice container
6	3851344014	A	Front,ice container
7	3850816020	A	Screw,ice,dispenser
31	3858006095	A	Screw,nickel plated,TPS 5,0X16

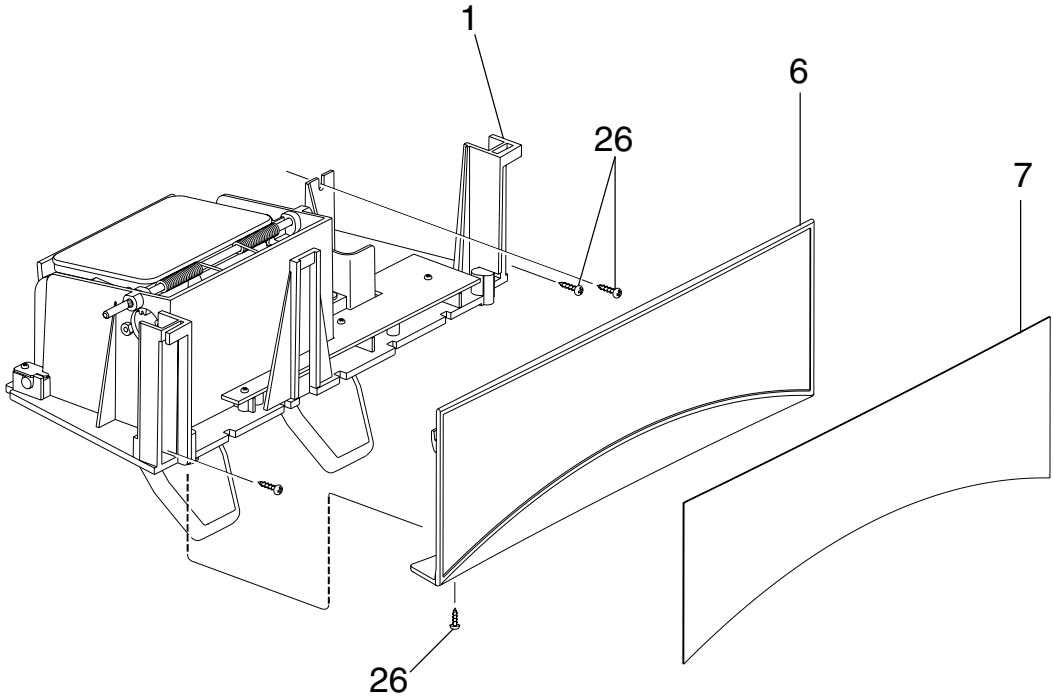

PCMO3007516

Exploded view no.: PCMO3007516
P00003007587

Matrix	PNC	ELC	ProdDate	Model
A	921148335	00	20080519	RM1350

Pos	Part No.	Matrix	Description
1	3851380018	A	Module,dispenser,ice & water
6	3851362016	A	Front
7	3851363014	A	Label
26	3858006046	A	Screw,PT 30x12

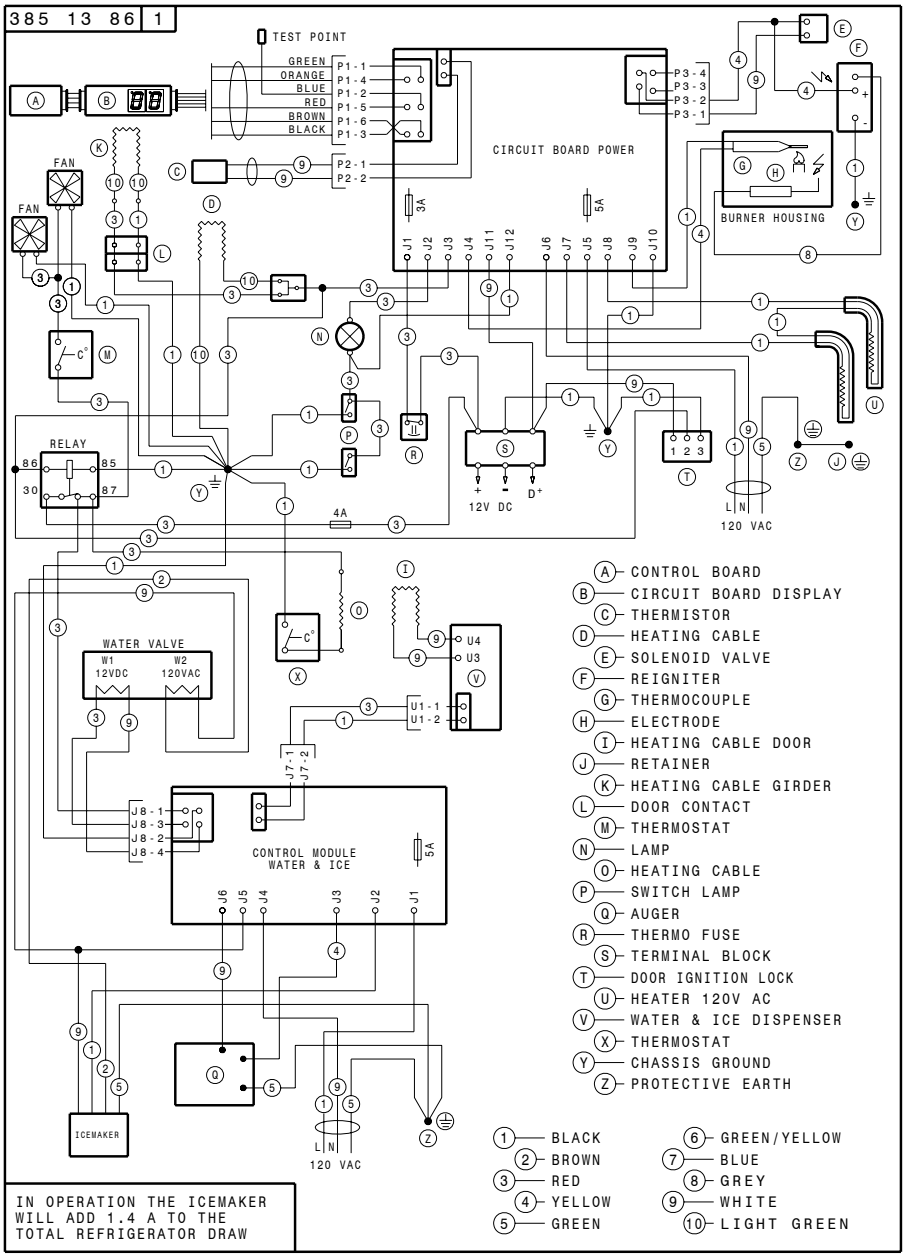
385 13 86 1
TEST POINT
GREEN
ORANGE
BLUE
RED
BROWN
BLACK
P1-1
P1-4
P1-2
P1-5
P1-6
P1-3
P2-1
P2-2
P3-4
P3-3
P3-2
P3-1
CIRCUIT BOARD POWER
3A
5A
J1 J2 J3 J4 J11 J12 J6 J7 J5 J8 J9 J10
BURNER HOUSING
FAN
FAN
RELAY
86
85
30
87
4A
12V DC
D+
1 2 3
L N
120 VAC
WATER VALVE
W1
12VDC
W2
120VAC
U4
U3
U1-1
U1-2
J7-1
J7-2
J8-1
J8-3
J8-2
J8-4
CONTROL MODULE
WATER & ICE
5A
J6 J5 J4 J3 J2 J1
ICEMAKER
L N
120 VAC
A CONTROL BOARD
B CIRCUIT BOARD DISPLAY
C THERMISTOR
D HEATING CABLE
E SOLENOID VALVE
F REIGNITER
G THERMOCOUPLE
H ELECTRODE
I HEATING CABLE DOOR
J RETAINER
K HEATING CABLE GIRDER
L DOOR CONTACT
M THERMOSTAT
N LAMP
O HEATING CABLE
P SWITCH LAMP
Q AUGER
R THERMO FUSE
S TERMINAL BLOCK
T DOOR IGNITION LOCK
U HEATER 120V AC
V WATER & ICE DISPENSER
X THERMOSTAT
Y CHASSIS GROUND
Z PROTECTIVE EARTH
1 BLACK
2 BROWN
3 RED
4 YELLOW
5 GREEN
6 GREEN/YELLOW
7 BLUE
8 GREY
9 WHITE
10 LIGHT GREEN
IN OPERATION THE ICEMAKER WILL ADD 1.4 A TO THE TOTAL REFRIGERATOR DRAW

P38513861