Dometic

When ordering parts, always state:
MODEL NO. - PRODUCT NO - QUANTITY -
PART NO. - DESCRIPTION
For electrical parts, also state:
VOLTAGE - WATTAGE

WINE CELLAR

PNC:	Model:	Voltage:	Cabinet Color:	Door Finish:	Door Hinge:	Brand:	Market:
921178644	CS200BD	120 VAC	Black	Wood/Black Frame	Left	Dometic	USA/Canada

WINE CELLAR

CS200BD

SERVICE OFFICE:

USA
Dometic, LLC
2320 Industrial Parkway
Elkhart, IN 46516
574-294-2511

CANADA
Dometic, LLC
46 Zatonski, Unit 3
Brantford, ON N3T 5L8
CANADA
519-720-9578

For Technical Assistance Call:
800-544-4881

Document No.:
3312685.000
Date:
2008/08

Motala Reference:
599711029 - 2007/08/21

© Dometic, LLC

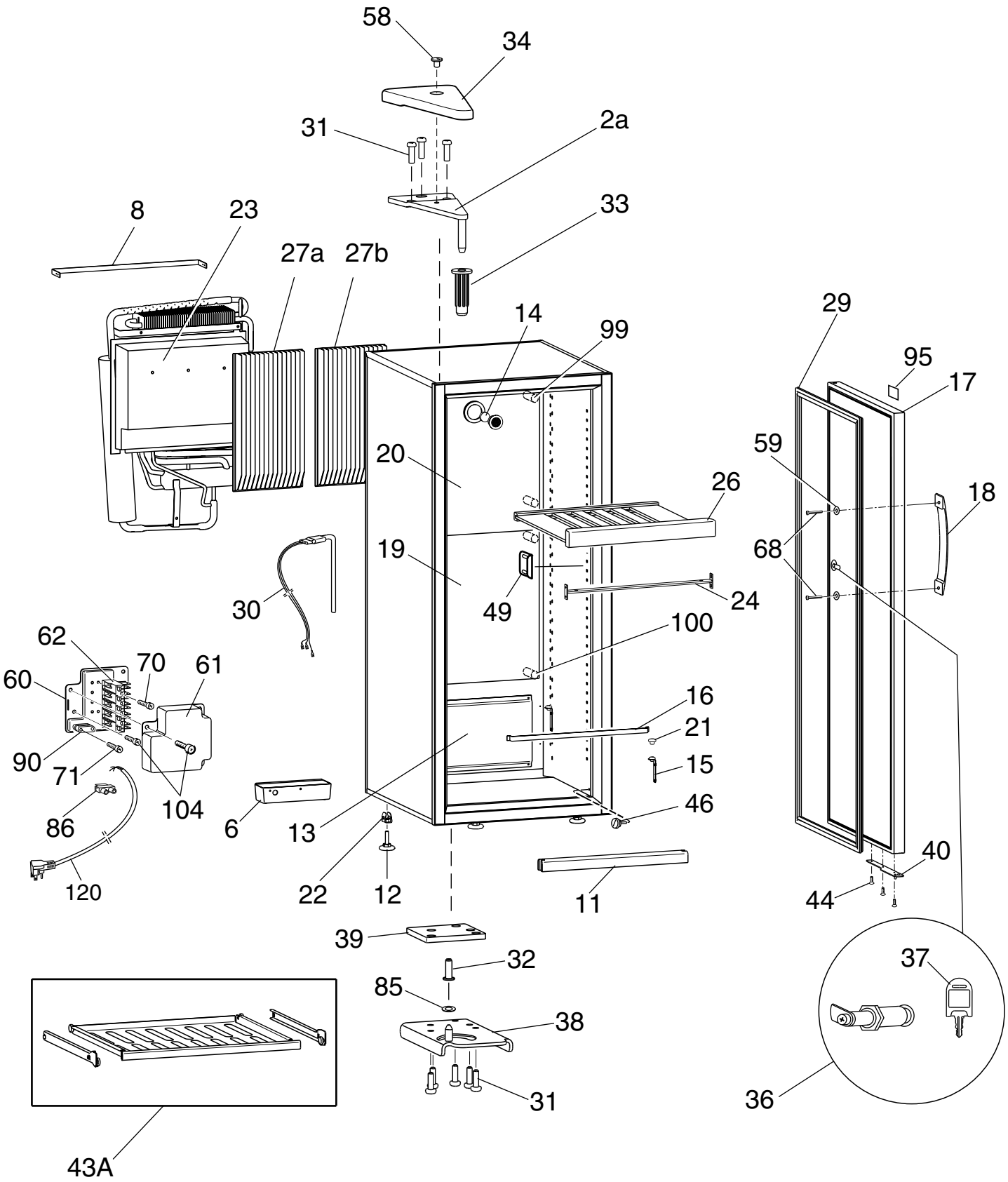

PCVK3008640

Exploded view no.: PCVK3008640
P00003008640

Matrix	PNC	ELC	ProdDate	Model
A	921178644	00	20080208	CS200BD

Pos	Part No.	Matrix	Description
2a	2955226028	A	Door hinge,upper
6	2955364019	A	Drop tray
8	2955273012	A	Detent,outer,rear,cpl.
11	2955276049	A	Wood,support,floor
12	2955592015	A	Foot
13	2955232067	A	Panel,cpl.,heating,127V, 40W
14	2955231010	A	Charcoal filter
15	2955385022	A	Shelf support,complete
16	2955309022	A	Detent,inner,rear
17	2955519083	A	Door assembly complete,wood,left
18	2955482019	A	Handle
19	2955384306	A	Disc,plastic,black
20	2955384280	A	Disc,plastic,black
21	2955373010	A	Cap,shelf support
22	3858058013	A	Nut,M10
23	2934706108	A	Cooling unit,with,thermal fuse,706
24	2955387010	A	Reinforcement bar,cpl.
26	2955480039	A	Shelf,wood
27a	2955358011	A	Evaporator,left
27b	2955358029	A	Evaporator,right
29	2955250036	A	Door gasket
30	3850644281	A	Heater,120V, 220W
31	3858052016	A	Screw,black,MRT M5X20
32	2955255019	A	Bush,door,lower
33	2955254012	A	Bush,door
34	2955400011	A	Cover
36	2955483017	A	Door lock
37	2955587015	A	Key,door,wood
38	2955311028	A	Hinge,detent,lower left
39	2955326018	A	Distance plate
40	2955313024	A	Door stop
43A	2955575010	A	Shelf,sliding type,cpl.
44	3858056025	A	Screw,zinc-plated,MFX M5X10
46	2955324013	A	Plastic screw
49	2955263013	A	Lock,catch
58	3858023017	A	Screw,LKCS M5X6
59	3858010170	A	Washer,black,5,3X15X2
60	2955396011	A	Terminal box,bottom
61	2955397019	A	Terminal box,Cover
62	2955398017	A	Terminal block
68	3858069028	A	Screw,black,MCS M4X50
70	3858006038	A	Screw,PT 35X30
71	3858006020	A	Screw,PT 35X20

© Dometic

Exploded view no.: PCVK3008640
P00003008640

Matrix	PNC	ELC	ProdDate	Model
A	921178644	00	20080208	CS200BD

Pos	Part No.	Matrix	Description
85	3858010196	A	Washer,zinc-plated,7X13X0,5
86	3858062015	A	Terminal block
90	2932342013	A	Cable clamp
95	2955351024	A	Name plate
99	2955259029	A	Spacer sleeve,upper
100	2955259011	A	Spacer sleeve,lower
104	3858068012	A	Screw,DK 4.8X19
120	2002699151	A	Cord set

© Dometic

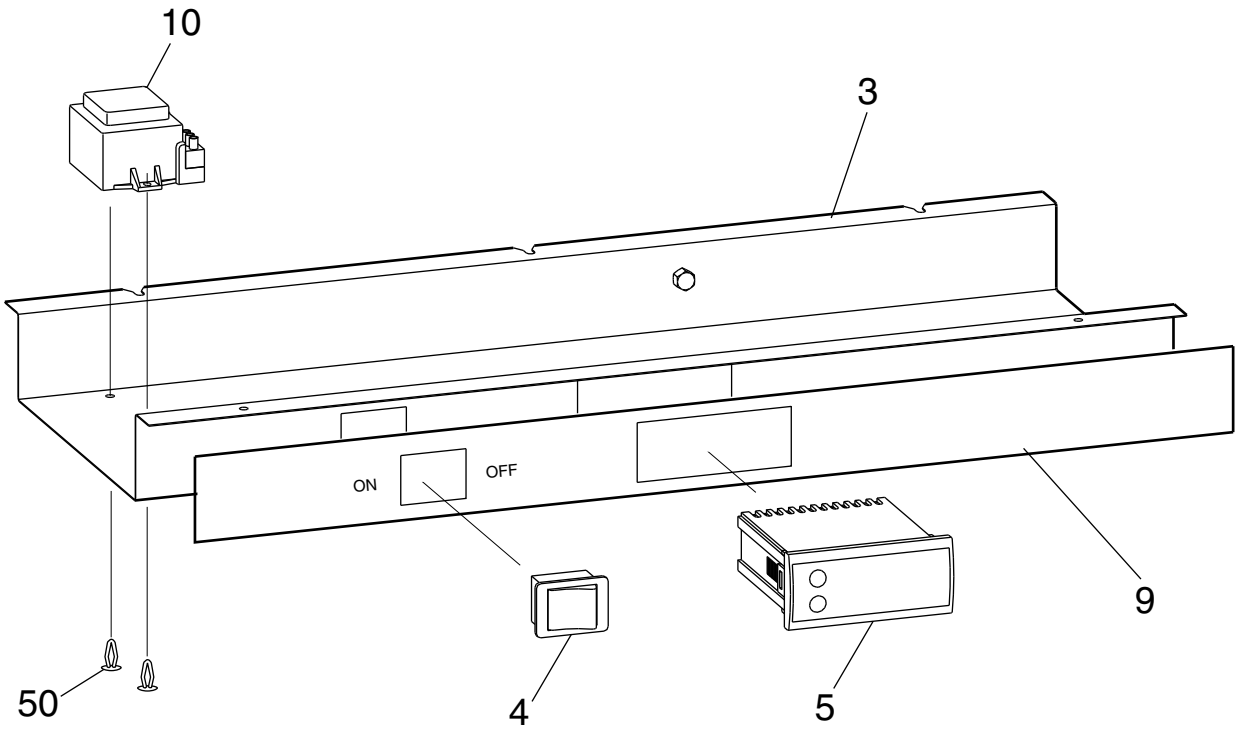

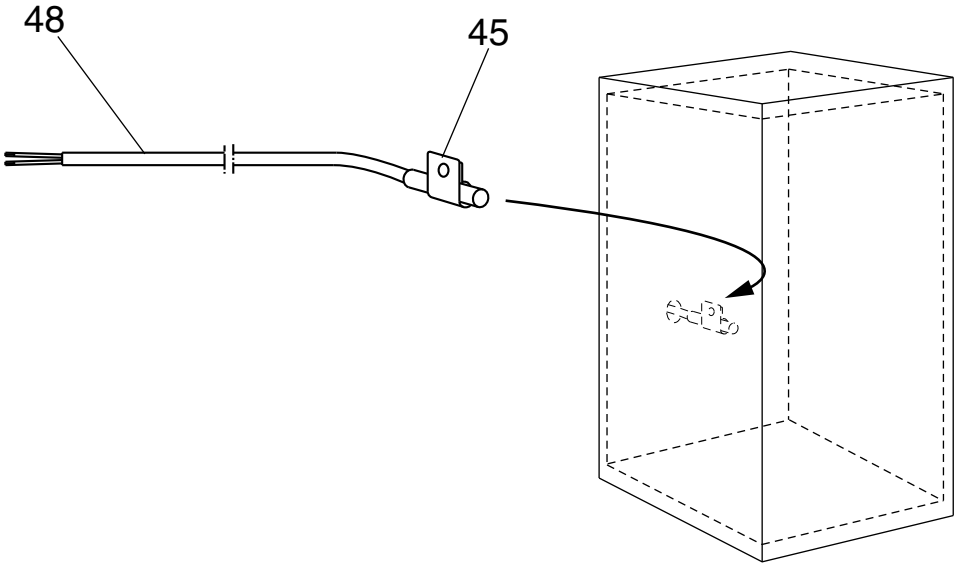

NCVK2096639

Exploded view no.: NCVK2096639
P00003008642

Matrix	PNC	ELC	ProdDate	Model
A	921178644	00	20080208	CS200BD

Pos	Part No.	Matrix	Description
3	2955242017	A	Bracket
4	2955244013	A	Toggle switch
5	2955477019	A	Control unit
9	2955355058	A	Label,control unit
10	2955243049	A	Transformer,115V/12V
45	2955433012	A	Cable clamp
48	3851059059	A	Thermistor
50	2932373034	A	Bung,black

© Dometic

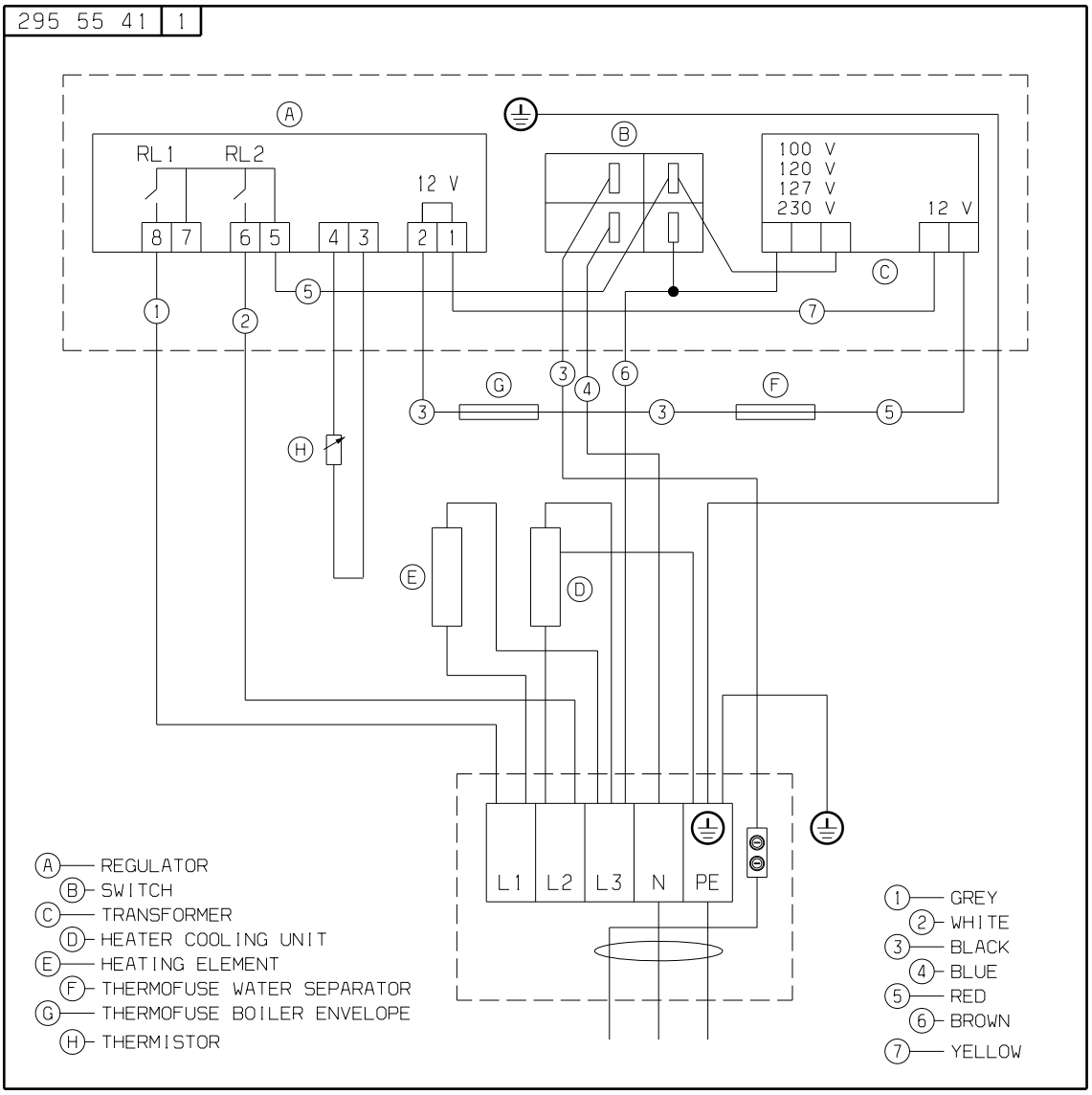
295 55 41 1
A
B
C
D
E
F
G
H
RL1
RL2
12 V
8 7 6 5 4 3 2 1
100 V
120 V
127 V
230 V
12 V
L1 L2 L3 N PE
A REGULATOR
B SWITCH
C TRANSFORMER
D HEATER COOLING UNIT
E HEATING ELEMENT
F THERMOFUSE WATER SEPARATOR
G THERMOFUSE BOILER ENVELOPE
H THERMISTOR
1 GREY
2 WHITE
3 BLACK
4 BLUE
5 RED
6 BROWN
7 YELLOW

N29555411