Dometic

When ordering parts, always state:
MODEL NO. - PRODUCT NO. - QUANTITY - PART NUMBER - DESCRIPTION
For Electric Details also state:
VOLTAGE - WATTAGE

USA
SERVICE OFFICE
Dometic, LLC
2320 Industrial Parkway
Elkhart, IN 46516
574-294-2511

CANADA
Dometic, LLC
46 Zatonski, Unit 3
Brantford, ON N3T 5L8
CANADA
519-720-9578

For Service Center Assistance Call:
800-544-4881

MODEL DM2852 Refrigerator

Product No.	Model	Voltage	Refrig Frame Color	Door Style	Door/Door Trim Color	Market	Brand
921146348	DM2852	120VAC	Black	Standard	Black	USA/Can	Dometic
921146349	DM2852	120 VAC	Black	Standard	Black	USA/Can	Dometic

PARTS LIST

MODEL DM2852 Series

3312323.011

Revision:
Form No. 3312323.011 6/08
(Replaces 3312323.000)

©2008 Dometic, LLC
LaGrange, IN 46761

ALPHABETICAL INDEX

	Page	Pos. No
Cabinet, exterior components	1-2	1-999
Cabinet, interior components	3-4	3-64
Cabinet, rear view	5-6	100-999
Door Asm.	7-8	1-35
Control & Burner components	9-10	1-253
Wiring Diagram	11	--

SPECIFICATIONS

PRODUCT NO.*	921146348 921146349
Energy Source **	120VAC/GAS
AC Heating Element	
Watts	325
Ohms	44
Amperage	2.7
BTU's Gas Burner	1500
Jet Size	# 58
Flue Baffle	
Size	5-1/8" x 13/16"
Position Above Burner	1-7/8"
Ice Trays	0
Crispers	2
Bottle Holders	0
Climate Control Heater	
Watts	6
Ohms	24
Amperage	.5

* Product number located on refrigerator data plate.
** 12 volt DC power is required to operate the refrigerator controls on all models.

531952T

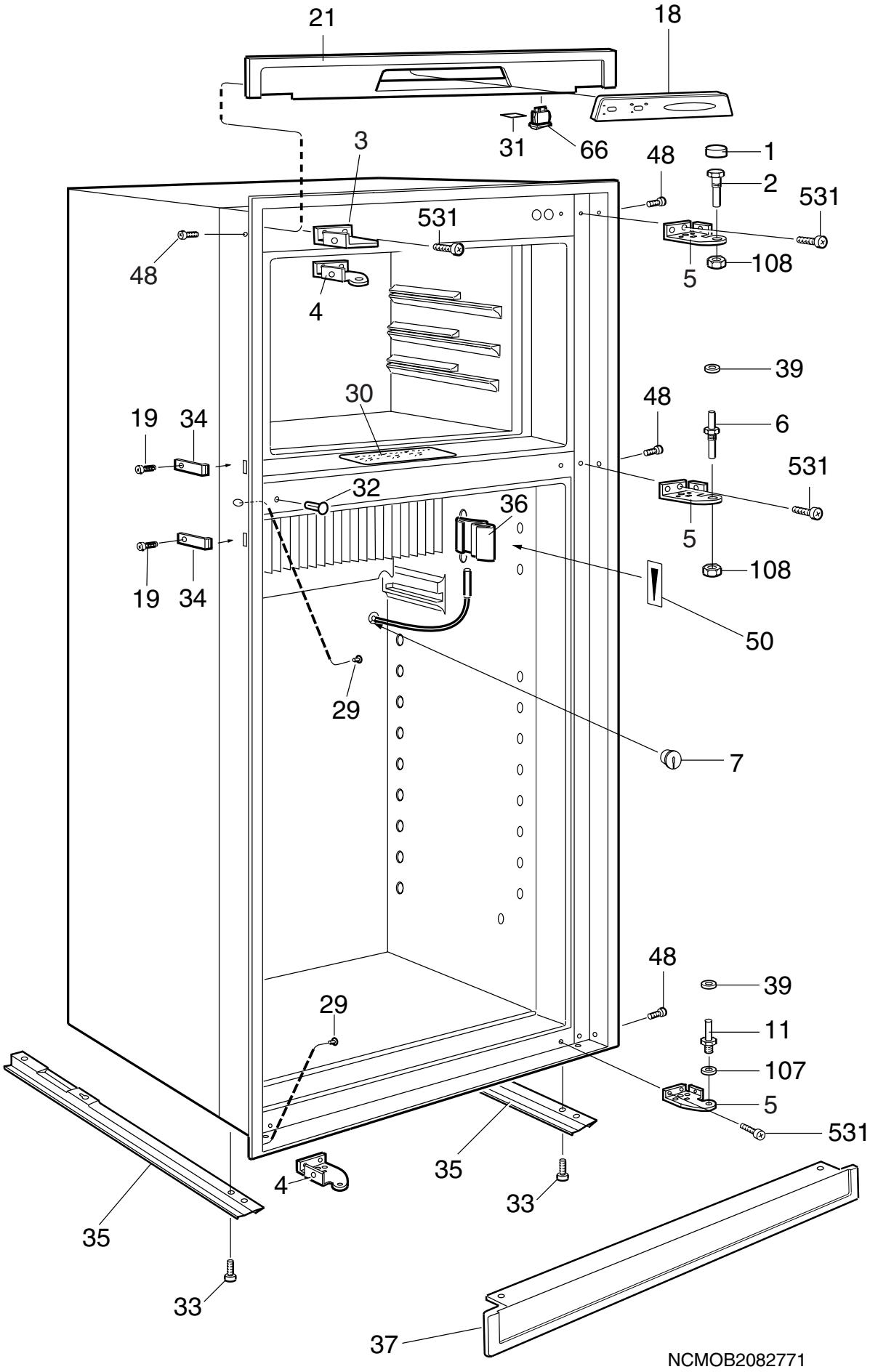
21
18
31
66
3
48
1
2
531
531
48
5
108
4
39
30
48
19
34
6
531
32
36
5
19
34
108
50
29
7
48
39
29
11
107
5
531
35
4
33
35
33
37
NCMOB2082771

© Dometic

Exploded view no.: NCMOB2082771
N00002099518

Matrix	PNC	ELC	ProdDate	Model
A	921146348	00	20080201	DM2852
B	921146349	00	20080121	DM2852

Pos	Part No.	Matrix	Description
1	2932736081	A B	Cover,black
2	2932647015	A B	Hinge pin,upper
3	2932644046	A -	Bracket,right,black
3	2932644038	- B	Bracket,left,black
4	2932643048	A -	Hinge,black
5	2932643030	A B	Hinge,black
6	2932648021	A B	Hinge pin,black
7	2002301006	A B	Cover
11	2932649011	A B	Hinge pin,lower
18	2932771021	A B	Panel,display board,black
19	3858002052	A B	Screw,zinc-plated,RXS B6X6,5
21	2932641034	A B	Front,black
29	2930740077	A B	Cover,black
30	2932776004	A B	Instruction plate
31	2932779008	A B	Label
32	3850585039	A B	Plug,black
33	3858039096	A B	Screw,zinc-plated,MRX M5X14
34	2932855014	A B	Fastening bow
35	2932660018	A B	Rail
36	3851088017	A B	Bracket,thermistor
37	2932690049	A B	Base cover,black
39	3858010022	A B	Washer,black,5,5X12X1
48	3858004058	A B	Screw,zinc-plated,MRX M4X4
50	3850774013	A B	Label
66	2932680016	A B	Switch
107	3858010113	A B	Washer,zinc-plated,BRB 6,4X12,5
108	3858009057	A B	Nut,black,ML6 M6
531	3858039047	A B	Screw,zinc-plated,MRX M4X10
999	2932750124	A -	Door reversing kit,left-right,black not shown
999	2932750116	- B	Door reversing kit,right-left,black not shown

© Dometic

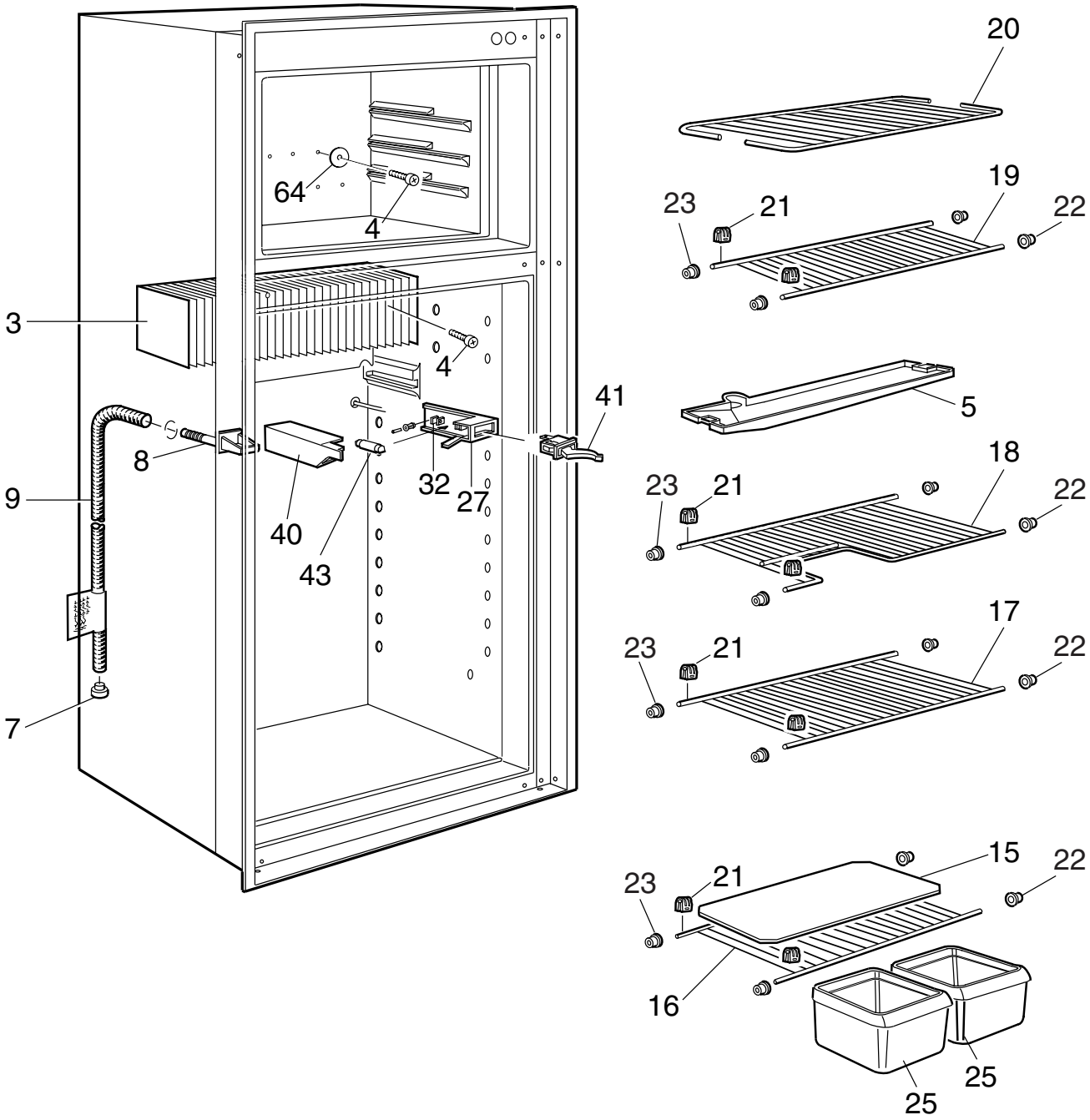

NCMOD2093663

Exploded view no.: NCMOD2093663
N00002099519

Matrix	PNC	ELC	ProdDate	Model
A	921146348	00	20080201	DM2852
B	921146349	00	20080121	DM2852

Pos	Part No.	Matrix	Description
3	2932630011	A B	Cooling flange
4	3858036019	A B	Screw,zinc-plated,KFXS B10X38
5	2932624014	A B	Evaporation tray
7	2932115013	A B	Discharge pipe,plug
8	2932635010	A B	Drain
9	2932749019	A B	Drain hose,L=1375mm
15	2931117176	A B	Shelf,plastic,transparent
			Up to serial no. 81899999
15	3851429013	A B	Shelf,plastic,white
			From serial no. 81900001
16	3850324025	A B	Grating shelf
17	3850324017	A B	Grating shelf
18	3850325014	A B	Grating shelf
19	3850324033	A B	Grating shelf
20	2932627025	A B	Grating shelf
21	2932102011	A B	Shelf support
22	2932101013	A B	Plug
23	2932103019	A B	Plug
25	2932621010	A B	Vegetable box,white
27	2932523018	A B	Lampholder
32	2932108018	A B	Contact pin
40	2932106012	A B	Lamp cover
41	2932665017	A B	Switch
43	2007290006	A B	Lamp,10W,12V
64	3858010147	A B	Washer,aluminium,5.2x22x1.5

© Dometic

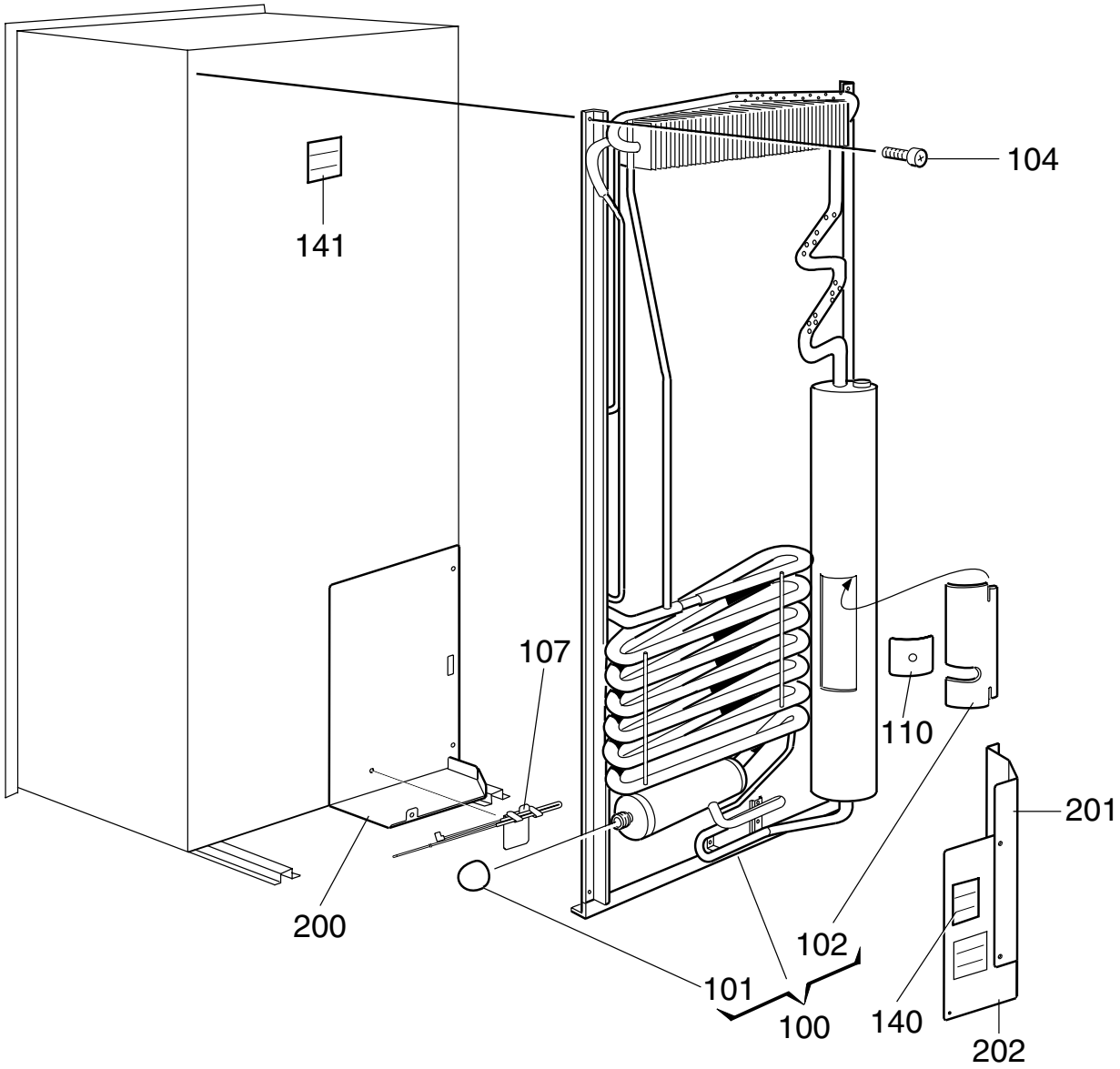

NCMOE2099520

Exploded view no.: NCMOE2099520
N00002099520

Matrix	PNC	ELC	ProdDate	Model
A	921146348	00	20080201	DM2852
B	921146349	00	20080121	DM2852

Pos	Part No.	Matrix	Description
100	2934806106	A B	Cooling unit,with,thermal fuse,806
101	173228008	A B	Cap
102	2933557007	A B	Cover sheet
104	3858068012	A B	Screw,DK 4.8X16
107	3851409015	A B	Thermal fuse,cpl.
110	3851397012	A B	Cover,for,heater
140	3850582002	A B	Label
141	3850583000	A B	Label
200	3851300016	A B	Cover plate
201	3851301014	A B	Cover plate,side
202	3851302012	A B	Cover plate,back
999	8251293000	A B	User manual
			not shown

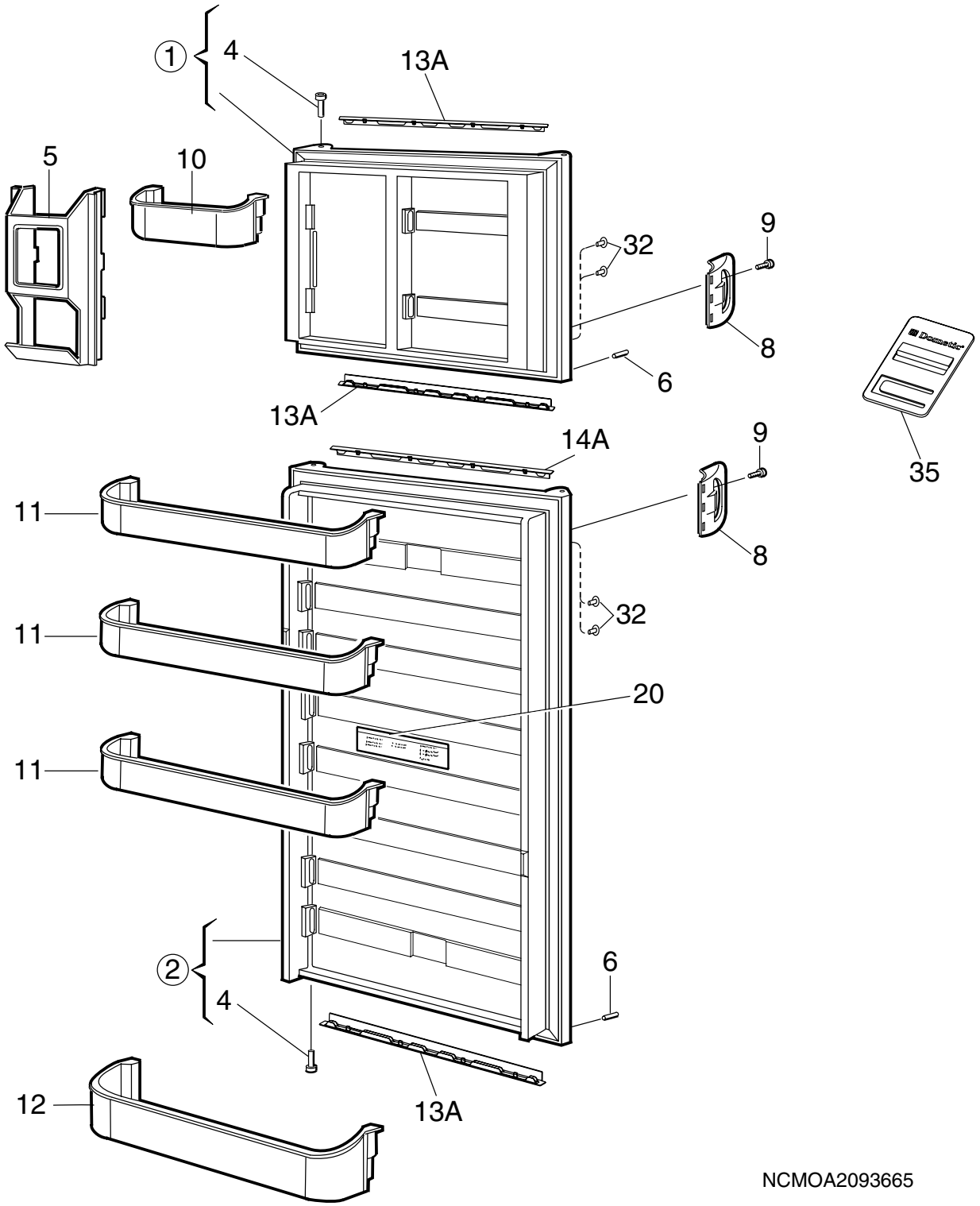
1
4
13A
5
10
9
32
8
6
13A
14A
9
35
11
8
11
32
20
11
2
6
4
12
13A
NCMOA2093665

Exploded view no.: NCMOA2093665
N00002099521

Matrix	PNC	ELC	ProdDate	Model
A	921146348	00	20080201	DM2852
B	921146349	00	20080121	DM2852

Pos	Part No.	Matrix	Description
1	2932561208	A -	Freezer door,left,black
1	2932561190	- B	Freezer door,right,black
2	2932562057	A -	Refrigerator door,left,black
2	2932562065	- B	Refrigerator door,right,black
4	2931171066	A B	Hinge bushing,black
5	2932578020	A B	Juice container
6	2932588011	A B	Stopper
8	3851174023	A B	Handle,black
9	3858000049	A B	Screw,black,PT 50X26
10	2932577014	A B	Door shelf
11	2932576016	A B	Door shelf
12	2932575018	A B	Bottle shelf
13A	3850919022	A B	Decoration strip,black
14A	3850919063	A B	Decoration strip,black
20	3851235006	A B	Label
32	3850625025	A B	Cover,black
35	3850781018	A B	Spacer,door

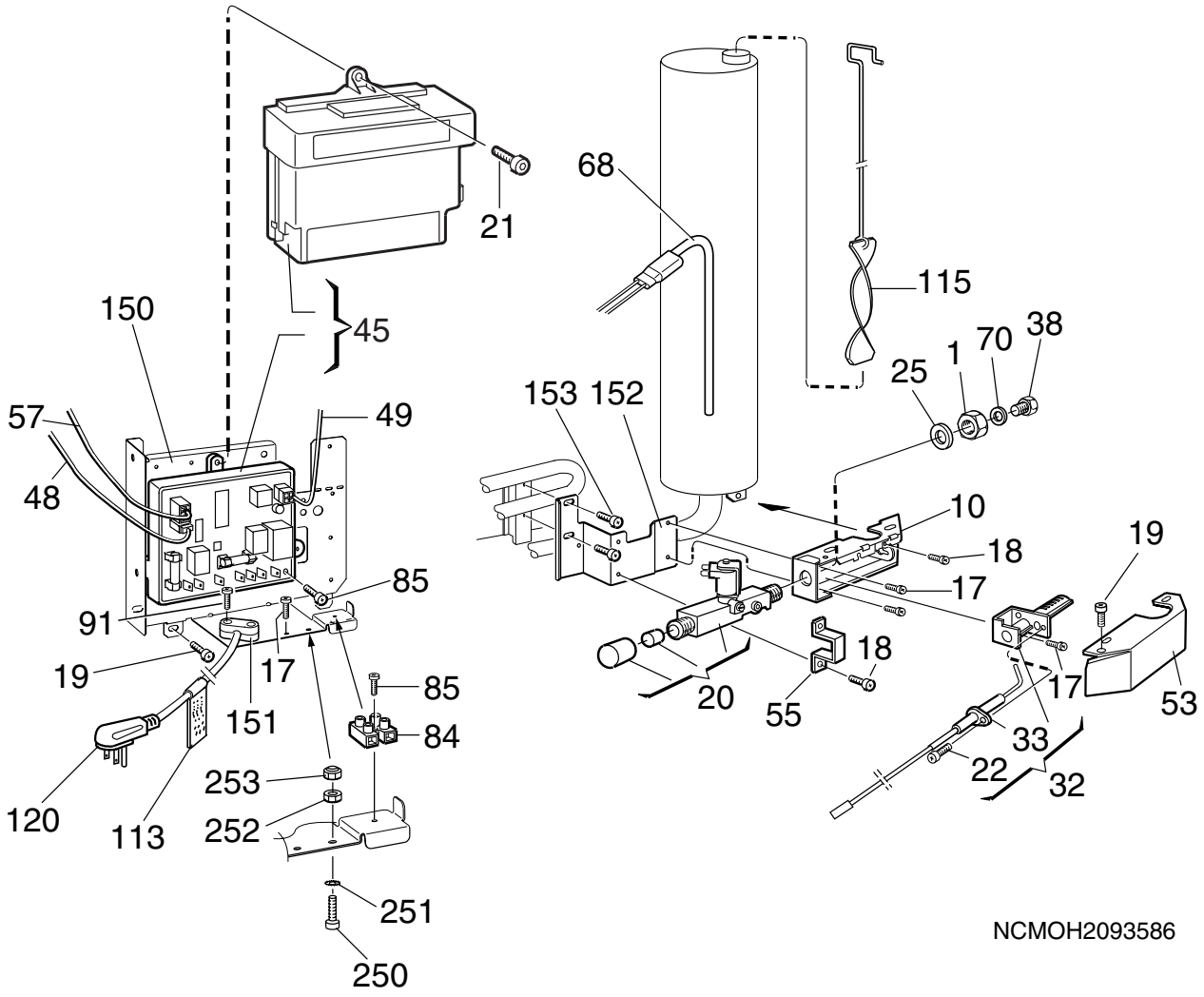
21
68
115
150
45
38
70
1
25
153
152
57
49
48
10
18
19
85
17
91
18
19
17
85
20
55
17
53
151
84
33
253
22
32
120
113
252
251
250
NCMOH2093586

Exploded view no.: NCMOH2093586
N00002099522

Matrix	PNC	ELC	ProdDate	Model
A	921146348	00	20080201	DM2852
B	921146349	00	20080121	DM2852

Pos	Part No.	Matrix	Description
1	140207044	A B	Nut
10	2932603018	A B	Burner housing
17	3858039039	A B	Screw,zinc-plated,MRX M4X8
18	3858039047	A B	Screw,zinc-plated,MRX M4X10
19	3858002144	A B	Screw,zinc-plated,RXS B6X9,5
20	2932615012	A B	Solenoid valve
21	3858002151	A B	Screw,zinc-plated,RXS B6X13
22	3858005014	A B	Screw,zinc-plated,RXK B6X9,5
25	3858010071	A B	Washer,12,5X18,5X1
32	2930697079	A B	Burner,with,conductor
33	2932781012	A B	Electrode,with,conductor
38	2007419217	A B	Jet,complete,no. 58
45	3850712013	A B	Power,module,integrated
48	3851059042	A B	Conductor,thermistor
49	2954539041	A B	Conductor,solenoid valve
53	2932661016	A B	Cover
55	2932662014	A B	Bracket
57	2954542037	A B	Conductor,PCB
68	3850644422	A B	Heater,325W, 120V
70	2007457001	A B	Washer,0,5mm
84	3858022019	A B	Terminal block
85	3858002185	A B	Screw,zinc-plated,RXS B6X25
91	3858002177	A B	Screw,zinc-plated,RXS B6X19
113	2932733005	A B	Label
115	2932667047	A B	Flue baffle
120	2002699094	A B	Cord set
150	3850337019	A B	Bracket
151	561014010	A B	Cable clamp
152	3850377015	A B	Retainer,solenoid valve
153	3858018017	A B	Screw,zinc-plated,M5X25
250	3858004033	A B	Screw,zinc-plated,MRX M4X16
251	3858011012	A B	Lock washer,zinc-plated,4,3X8
252	3858009016	A B	Hexagon nut,zinc-plated,M4X3,2
253	3858028024	A B	Lock nut,zinc-plated,M4

© Dometic

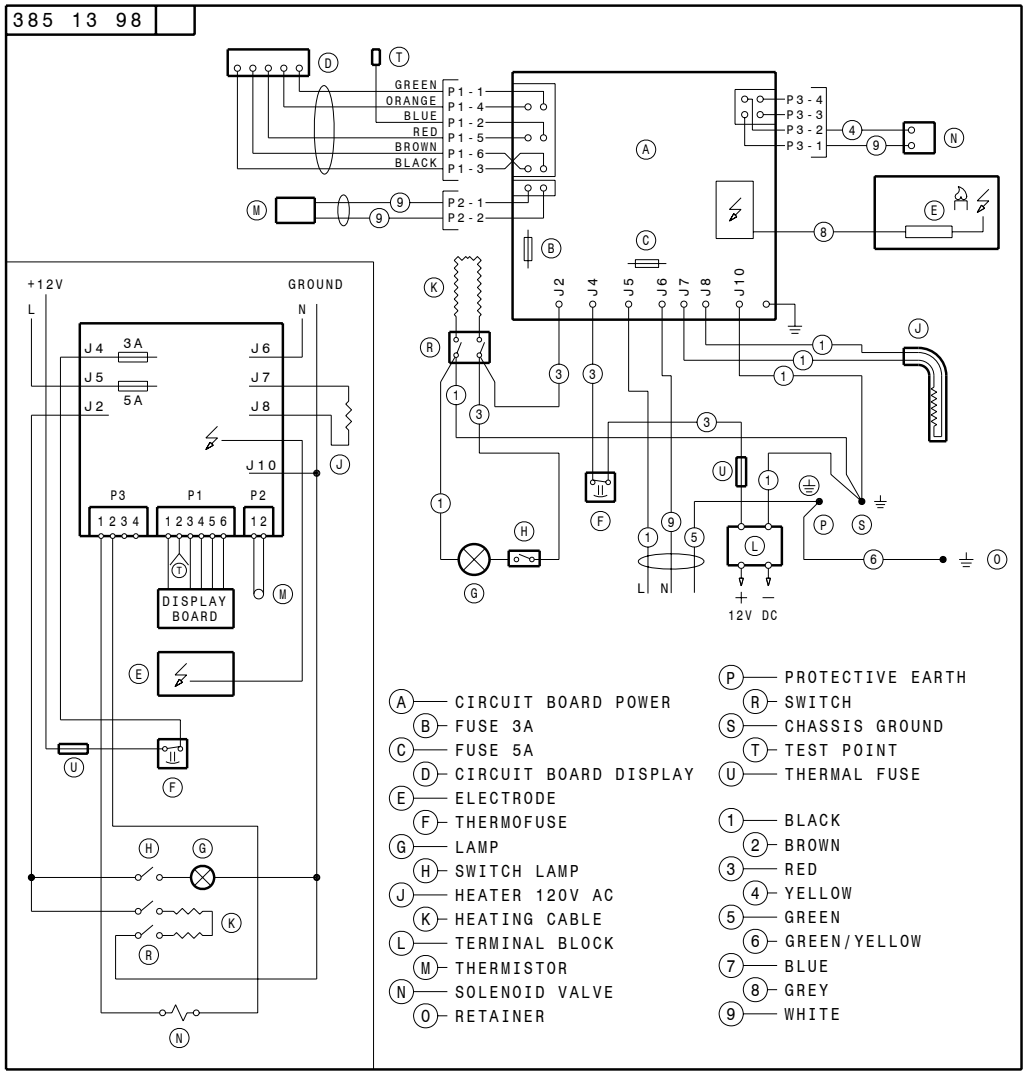
385 13 98
GREEN
ORANGE
BLUE
RED
BROWN
BLACK
P1-1
P1-4
P1-2
P1-5
P1-6
P1-3
P2-1
P2-2
P3-4
P3-3
P3-2
P3-1
J2
J4
J5
J6
J7
J8
J10
+12V
GROUND
L
N
3A
5A
P3
P1
P2
1 2 3 4
1 2 3 4 5 6
1 2
DISPLAY BOARD
12V DC
A CIRCUIT BOARD POWER
B FUSE 3A
C FUSE 5A
D CIRCUIT BOARD DISPLAY
E ELECTRODE
F THERMOFUSE
G LAMP
H SWITCH LAMP
J HEATER 120V AC
K HEATING CABLE
L TERMINAL BLOCK
M THERMISTOR
N SOLENOID VALVE
O RETAINER
P PROTECTIVE EARTH
R SWITCH
S CHASSIS GROUND
T TEST POINT
U THERMAL FUSE
1 BLACK
2 BROWN
3 RED
4 YELLOW
5 GREEN
6 GREEN/YELLOW
7 BLUE
8 GREY
9 WHITE

N38513980