Dometic

PARTS LIST
RM1350

USA
SERVICE OFFICE
Dometic Corporation
2320 Industrial Parkway
Elkhart, IN 46516
574-294-2511

CANADA
Dometic Corporation
46 Zatonske Unit 3
Brantford, ON N3T 5L8
CANADA
519-720-9578

For Service Center Assistance Call:
800-544-4881

Product NO	Model	Voltage	Refrigerator Frame Color	Door Style	Door Trim Color	Market	Brand
921148332	RM1350	120 V	Black	Surround	Black	USA/Canada	Dometic

PARTS LIST

MODEL RM1350

3312261.000

Form No. 3312261.000 12/07
©2007 Dometic Corporation
LaGrange, IN 46761

SPECIFICATIONS

Product number*	921148332
Energy Source**	
Watts	420
Ohms	34.3
Amperage	3.5
BTU's Gas Burner	2080
Jet Size	#76
Flue Baffle	
Size	6" x 15/16"
Position Above Burner	1-1/4"
Ice Bucker	1
Crispers	3
Bottle Holders	2
Climate Control Heater, Light Flap, and Fan	
Watts	36
Ohms	4
Amperage	3

* Product number located on refrigerator data plate.
** 12volt DC power is required to operate the refrigerator controls on all models

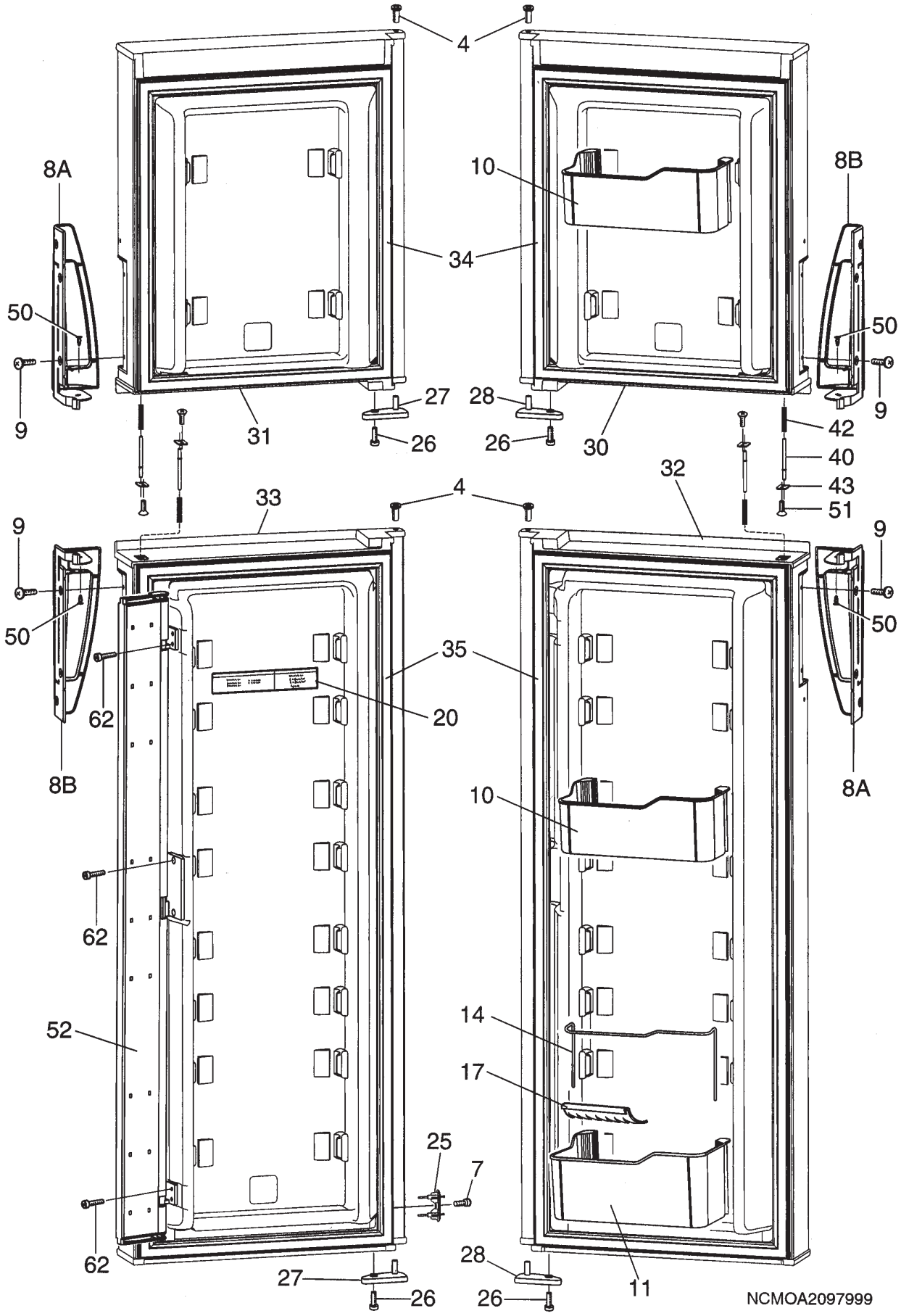
4
8A
10
8B
34
50
50
9
9
27
28
31
26
26
30
42
40
32
43
33
4
51
9
9
50
50
35
62
20
8B
8A
10
62
14
52
17
25
7
62
28
27
26
26
11
NCMOA2097999

INDEX	PART NO	MODEL	DESCRIPTION
4	2931171066	A	Hinge black
7	3858002102	A	Screw RXS B4X9.5
8A	3851299010	A	Handle
8B	3851299028	A	Hancle
9	3858089018	A	Screw, ELM 5X10 black
10	3850973011	A	Shelf, door clear
11	3851052013	A	Shelf, door clear
14	3850976022	A	Rack
17	2932658046	A	Bottle holder, white
20	3851235006	A	Decal
25	3851214019	A	Contact pin
26	3858006061	A	Screw, PT PH 35x12
27	3851244016	A	Door Stop, LH
28	3851244024	A	Door Stop, RH
30	3851169072	A	Freezer door right
31	3851169080	A	Freezer door left
32	3851170104	A	Refr door right
33	3851170112	A	Refr door left
34	3851228027	A	Door gasket freezer
35	3851228019	A	Door Gasket, Refridgerator
40	3851092019	A	Lock Bar
42	3850497011	A	Spring
43	3850496013	A	Plate
50	2932373042	A	Bung, Black
51	3858071024	A	Screw, Black, ETP 40x14
52	3851104038	A	Flap
62	3858002268	A	Screw, RXS B8X19

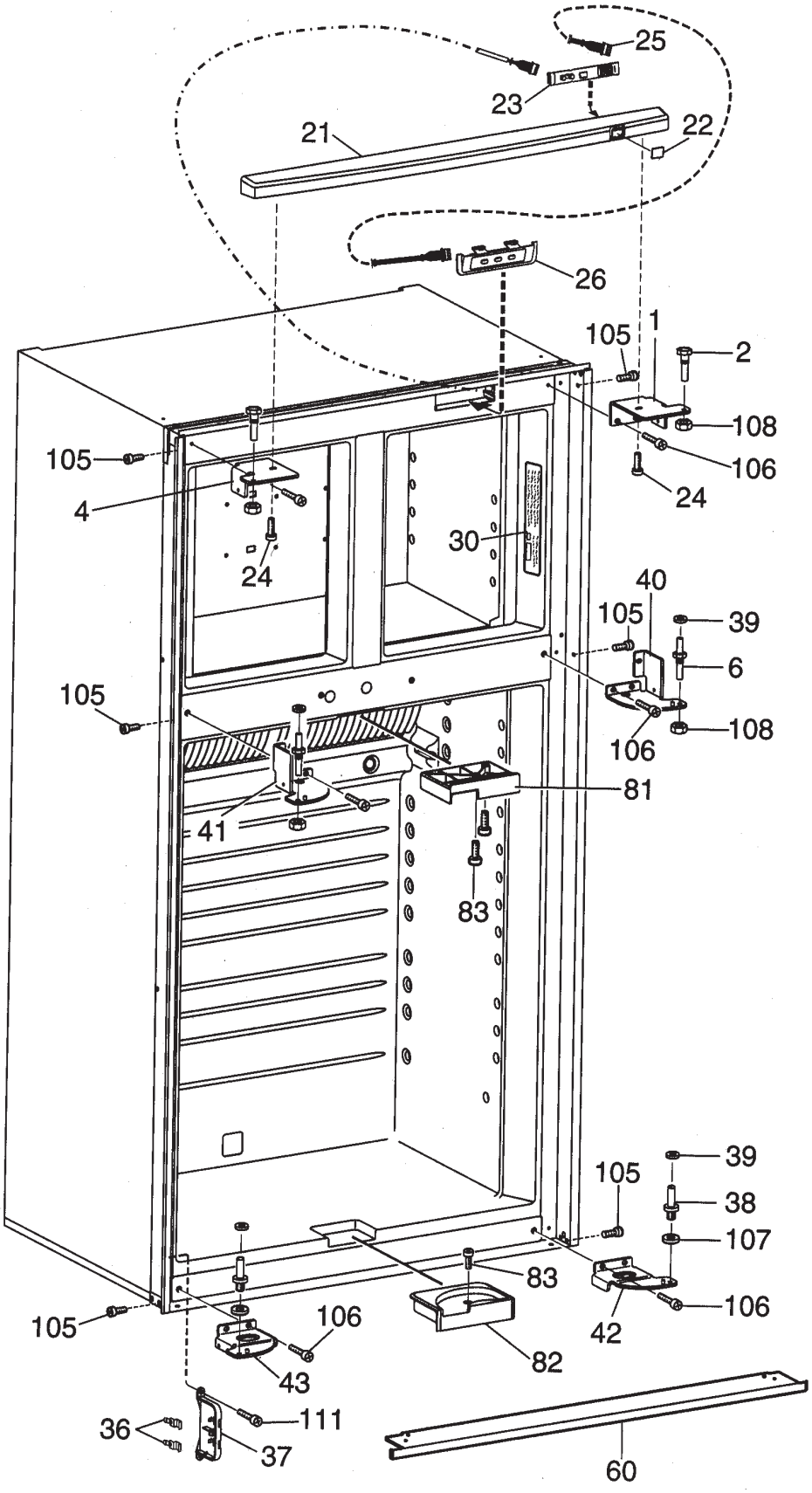

NCMOB2088279

INDEX	PART NO	MODEL	DESCRIPTION
1	3850989025	A	Hinge, Black
2	2932647015	A	Hinge Pin, Upper
4	3850989017	A	Hinge, Black
6	2932648021	A	Hinge Pin, Black
21	3851073019	A	Front, Black
22	3850970017	A	Lens
23	3850969019	A	Board, Control
24	3858006012	A	Screw, PT PH4X10
25	2954568016	A	Harness
26	3850964010	A	Control Panel, Complete
30	3851035000	A	Decal
36	3851212013	A	Contact Plate
37	3851211015	A	Holder
38	2932649029	A	Hinge Pin
39	3858010022	A	Washer
40	3851230049	A	Hinge, Complete
41	3851230031	A	Hinge, Complete
42	3851230023	A	Hinge, Complete, Lower
43	3851230015	A	Hinge, Complete, Lower
60	2932664093	A	Base Cover Black
81	3851102016	A	Guiding Device Upper
82	3851103014	A	Guiding Device Lower
83	3858002300	A	Screw, RXS 4.25X25
105	3858004041	A	Screw MRX 4X6FZ
106	3858039104	A	Screw, MRX-RR M4X10, Bblack
107	3858010113	A	Washer, BRB 6.4X12.5
108	3858009057	A	Nut, Black
111	3858002201	A	Screw, RXS B8X9.5

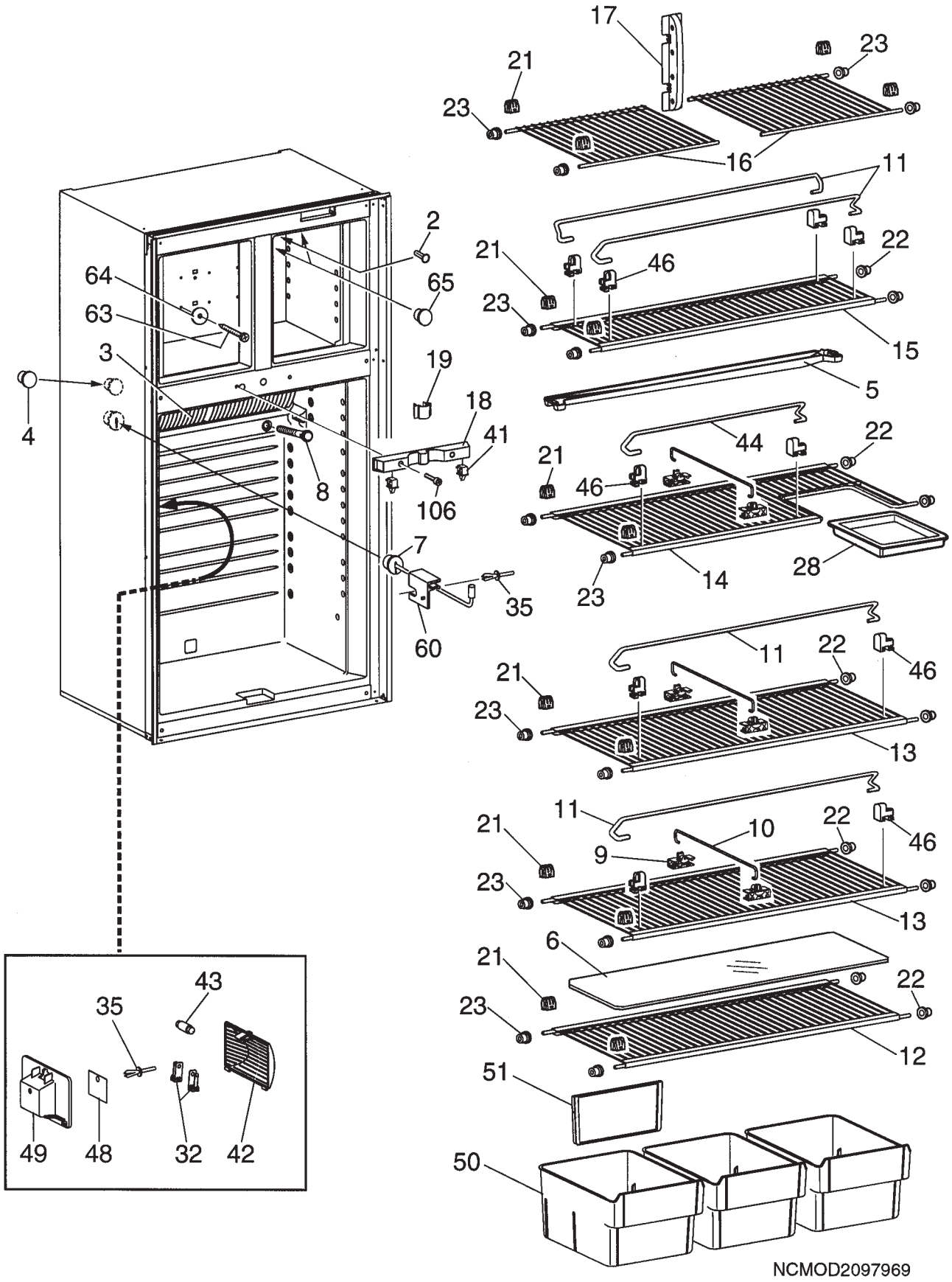
17
21
23
23
16
11
2
21
46
22
64
65
23
63
15
3
19
5
18
4
41
44
22
21
46
8
106
7
14
28
23
35
60
11
22
46
21
23
13
11
10
22
46
21
9
23
13
6
21
22
23
12
51
50
43
35
49
48
32
42
NCMOD2097969

INDEX	PART NO	MODEL	DESCRIPTION
2	3850585013	A	Bung, White
3	3851166011	A	Cooling Flange
4	3851222012	A	Cover
5	3851050017	A	Drip tray, clear
6	2931117226	A	Shelf, Plastic
7	2002301006	A	Cover
8	3851229017	A	Drain, Pipe
9	3851208011	A	Holder,Sliding
10	3851209019	A	Rack
11	2007337252	A	Rack
12	3851236012	A	Shelf, Wire
13	3851236020	A	Shelf, Wire
14	3851237010	A	Shelf, Wire
15	3851236038	A	Shelf, Wire
16	3851023014	A	Shelf, Wire
17	3851153019	A	Shelf Support, Rear
18	3851290019	A	Housing, Door Lock
19	3851270011	A	Air, Position, Device
21	2932102011	A	Shelf Support
22	2932101013	A	Plug
23	2932103019	A	Plug
28	2932636018	A	Box
32	2932108018	A	Contact Pin
35	0165521030	A	Rivet
41	3851000012	A	Switch
42	3850962014	A	Lamp Glass
43	2007290006	A	Lamp 10W 12VDC
44	2007337179	A	Rack
46	2930693045	A	Holder
48	3850963012	A	Reflector
49	3850961016	A	Lamp Housing
50	3851089015	A	Crisper, Clear
51	3851090013	A	Divider
60	3850679014	A	Bracket Thermistor
63	3858036027	A	Screw, KFXS 4.8X55
64	3858010147	A	Washer
65	2932400027	A	Cap, White
106	3858039104	A	ScrewMRX-TT M4X10 Black

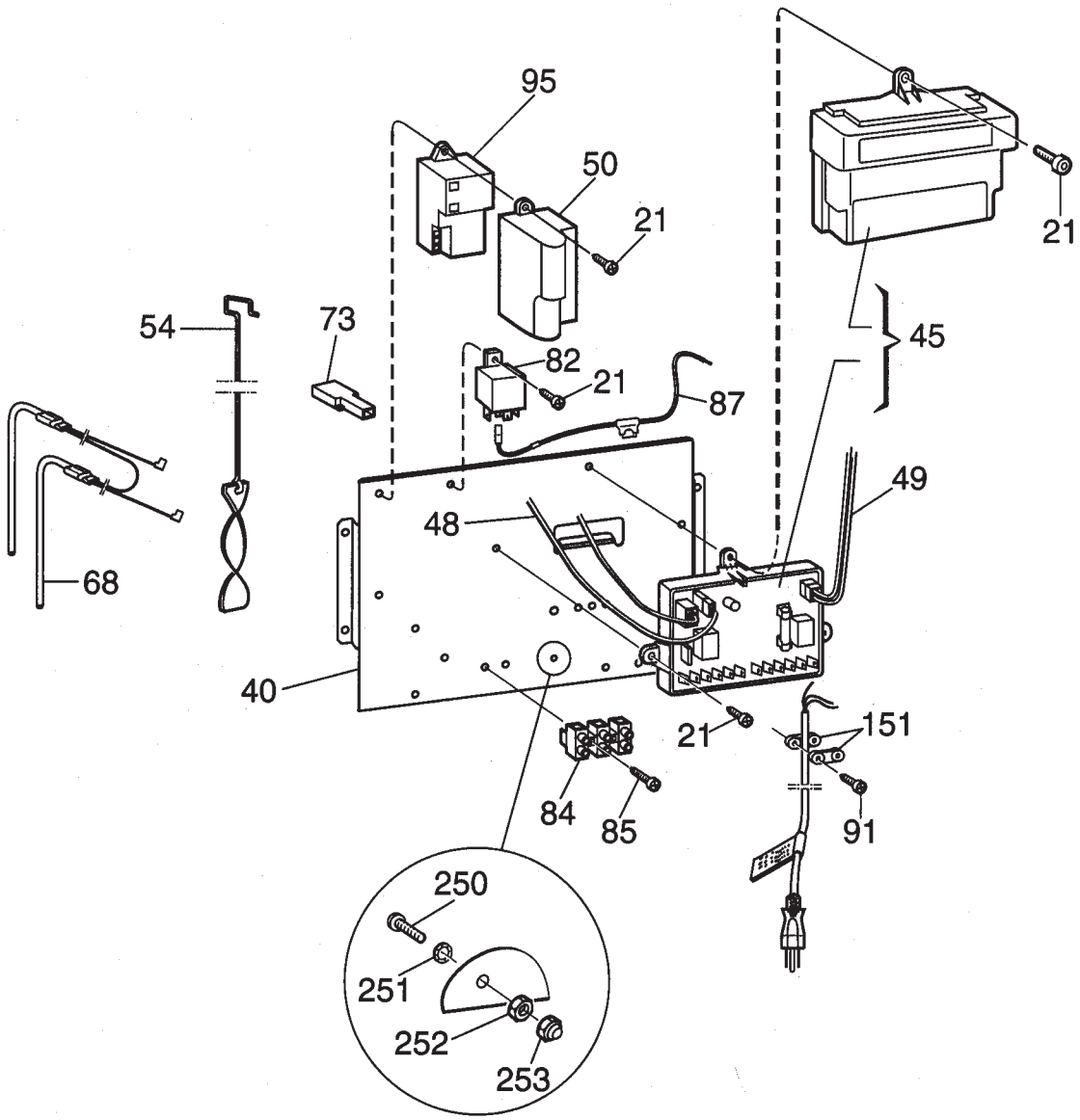

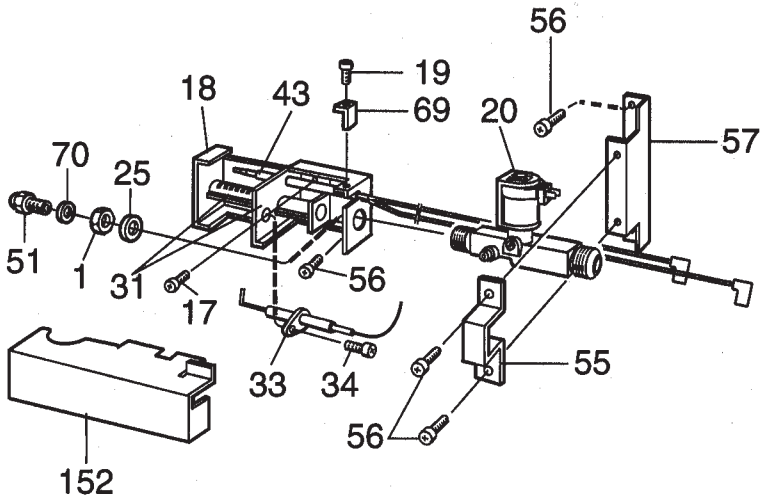

NCMOH2088658

INDEX	PART NO	MODEL	DESCRIPTION
1	0140207044	A	Nut
17	3858039039	A	Screw, MRX M4x8
18	2932161017	A	Burner Housing
19	3858002144	A	Screw, RXS B6x9.5
20	2932615020	A	Solenoid Valve
21	3858002151	A	Screw, RXS B6x13
25	3858010071	A	Washer, 12.5x18.5x1
31	0955001672	A	Burner Pipe, Complete
33	2932781046	A	Electrode
34	3858002052	A	Screw, RXS B6x6.5
40	3851198014	A	Bracket
43	2931826032	A	Thermocouple
45	3851005029	A	Power Module
48	3851059042	A	Conductor, Thermistor
49	2954539058	A	Conductor, Solenoid Valve
50	2931886010	A	Cover
51	2007419332	A	Jet #76
54	2932667054	A	Flame Spreader
55	2932662014	A	Bracket
56	3858039047	A	Screw, MRX M4x10
57	2932043017	A	Support Plate
68	3850644539	A	Heater, 120VAC, 2 x 210W
69	3851342018	A	Bracket, Thermocouple
70	2007457001	A	Washer, 0.5mm
73	2931963017	A	Connector, “Y”
82	3851334007	A	Relay
84	3858022027	A	Terminal Block
85	3858002185	A	Screw, RXS B6x25
87	2954553034	A	Wire W/fuse
91	3858002177	A	Screw, RXS B6x19
95	2931132019	A	Spark Generator
151	0561014010	A	Cable Clamp
152	2931401018	A	Cover
250	3858004033	A	Screw, MRX M4x16
251	3858011012	A	Lock Washer, 4.3x8
252	3858009016	A	Hexagon Nut, M4x3.2
253	3858028024	A	Lock Nut, M4

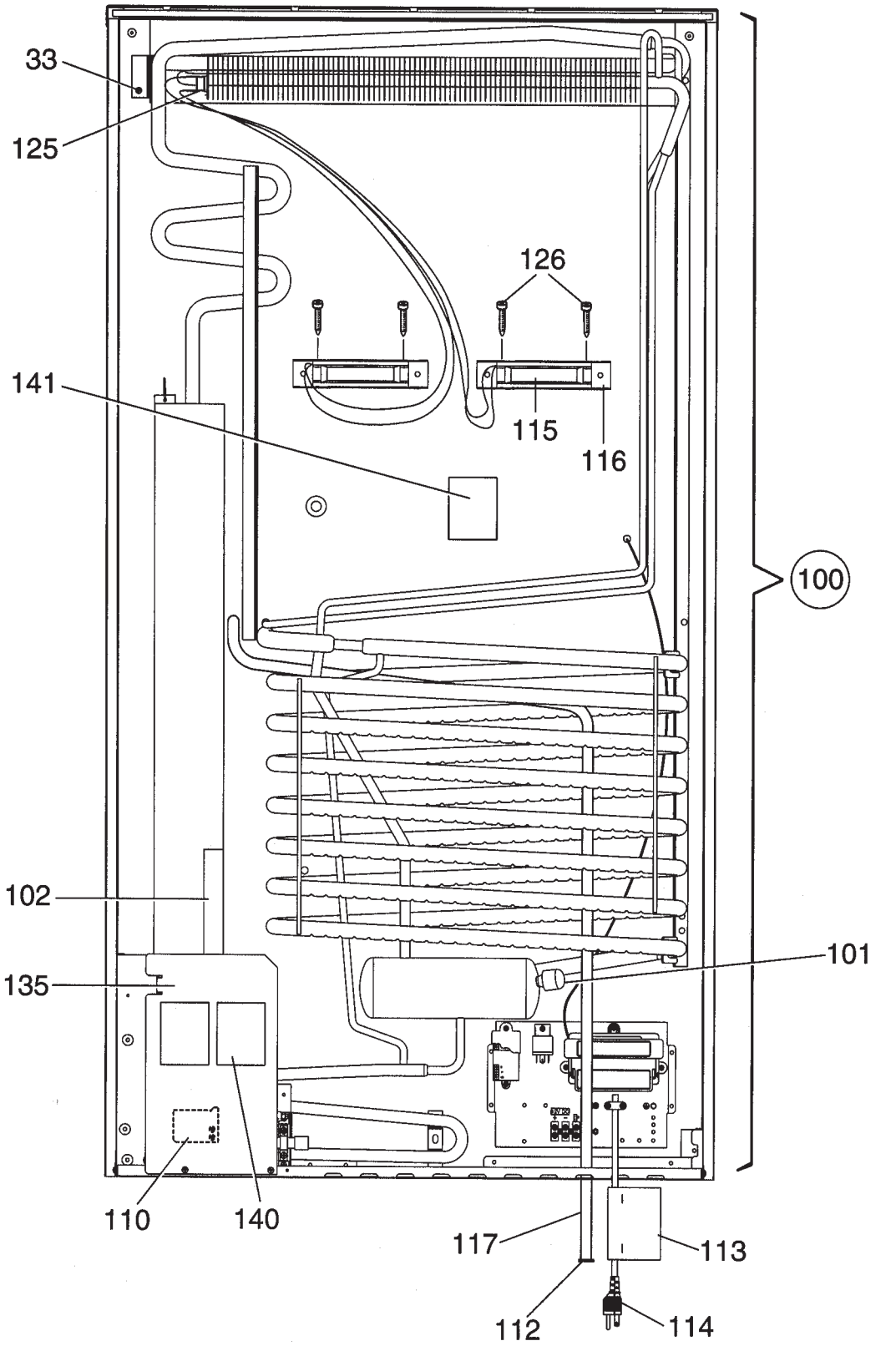

NCMOE2091801

INDEX	PART NO	MODEL	DESCRIPTION
33	3858039096	A	Screw, MRX 5x14
100	2934949104	A	Cooling Unit, Type 949, W/Fuse
101	0173228008	A	Cap
102	2933557023	A	Flap
110	3850600010	A	Blow-Out Protection
112	2932115013	A	Discharge Pipe Plug
113	2932733005	A	Label
114	2002699110	A	Cord Set
115	3851183016	A	Fan
116	3851184014	A	Bracket, Fan
117	2932749100	A	Drainage Hose
125	3850306055	A	Thermal Fuse
126	3858002318	A	Screw, RXS 4.2x32
135	2932155019	A	Support Plate
140	3850582002	A	Label
141	3850583000	A	Label

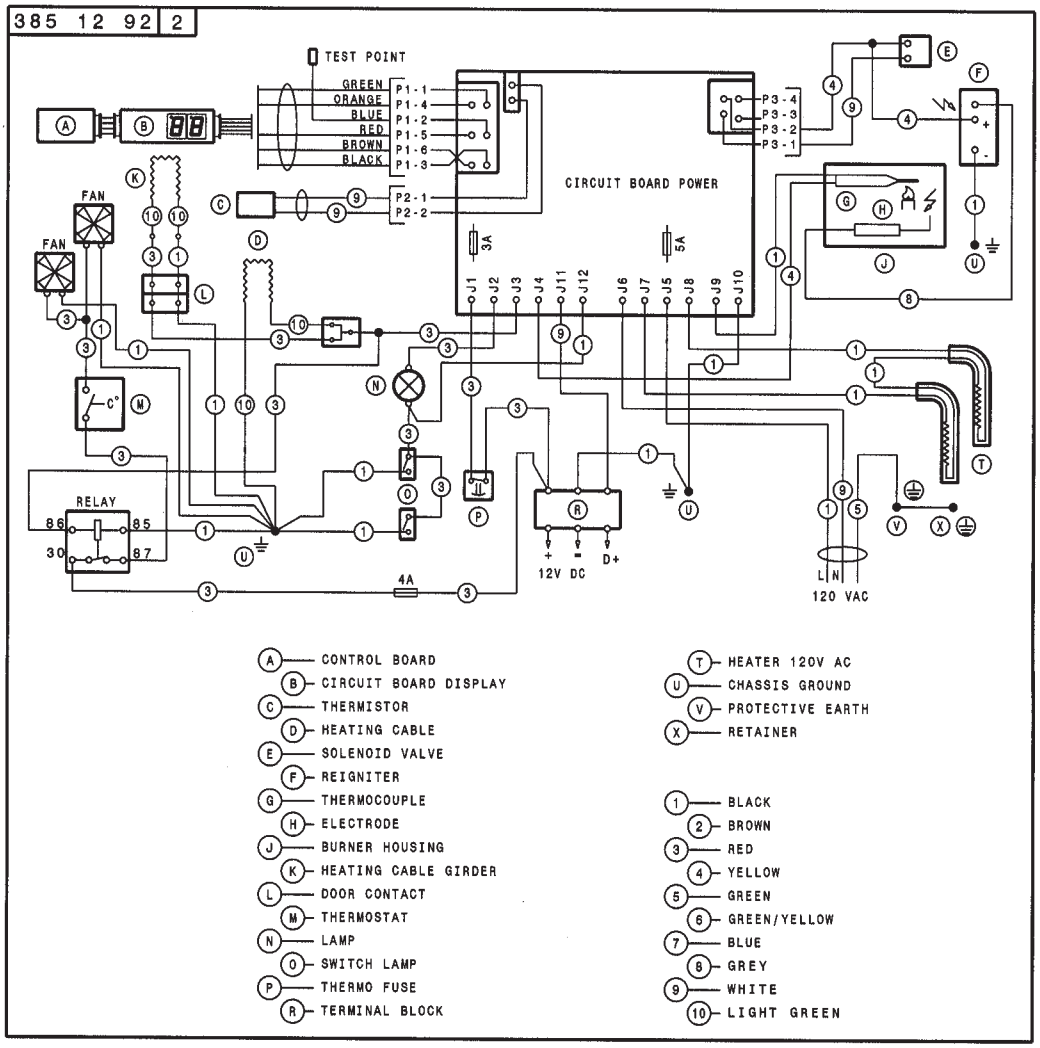
385 12 92 2
TEST POINT
GREEN P1-1
ORANGE P1-4
BLUE P1-2
RED P1-5
BROWN P1-6
BLACK P1-3
P2-1
P2-2
P3-4
P3-3
P3-2
P3-1
CIRCUIT BOARD POWER
3A
5A
J1 J2 J3 J4 J11 J12 J6 J7 J5 J8 J9 J10
FAN
FAN
RELAY
86
85
30
87
4A
12V DC
D+
L N
120 VAC
A CONTROL BOARD
B CIRCUIT BOARD DISPLAY
C THERMISTOR
D HEATING CABLE
E SOLENOID VALVE
F REIGNITER
G THERMOCOUPLE
H ELECTRODE
J BURNER HOUSING
K HEATING CABLE GIRDER
L DOOR CONTACT
M THERMOSTAT
N LAMP
O SWITCH LAMP
P THERMO FUSE
R TERMINAL BLOCK
T HEATER 120V AC
U CHASSIS GROUND
V PROTECTIVE EARTH
X RETAINER
1 BLACK
2 BROWN
3 RED
4 YELLOW
5 GREEN
6 GREEN/YELLOW
7 BLUE
8 GREY
9 WHITE
10 LIGHT GREEN

N38512922