Dometic

DIAGNOSTIC SERVICE MANUAL

NEW GENERATION REFRIGERATOR
RM3762 & RM3962

USA
Service Office
Dometic Corporation
2320 Industrial Parkway
Elkhart, IN. 46516

CANADA
Dometic Corporation
46 Zatonski, Unit 3
Brantford, ON. N3T 5L8

Form No. 3312124.013 1/13
(Replaces 3312124.000)
©2013 Dometic Corp.
LaGrange, IN. 46761

Foreword

This service manual is the result of the dedication of Dometic Corporation Technical staff and its engineers in giving service people the necessary instruction for making accurate analyses of certain conditions. Provided is a diagnostic chart leading a qualified mechanic into the service manual pages to locate and solve symptoms which may occur. Dometic has continued its commitment in providing service people with this, the most up-to-date information about servicing Dometic RV accessories.

SAFETY INSTRUCTIONS

This manual has safety information and instructions to help users eliminate or reduce the risk of accidents and injuries.

RECOGNIZE SAFETY INFORMATION

This is the safety alert symbol. It is used to alert you to potential physical injury hazards. Obey all safety messages that follow this symbol to avoid possible injury or death.

UNDERSTAND SIGNAL WORDS

A signal word will identify safety messages and property damage messages, and will indicate the degree or level of hazard seriousness.

⚠ WARNING indicates a hazardous situation that, if NOT avoided, could result in death or serious injury.

⚠ CAUTION indicates a hazardous situation that, if NOT avoided could result in minor death or serious injury.

NOTICE is used to address practices NOT related to physical injury.

Read and follow all safety information and instructions.

CONTENTS

PAGE NO.

DIAGNOSTIC FLOW CHART 4

SECTION 1

OPERATION

Refrigerator Operation 6

SECTION 2

AC VOLTAGE

AC Voltage Requirements 10

SECTION 3

AC COMPONENTS

Heating Element 10

SECTION 4

DC VOLTAGE

DC Voltage Requirements 10

SECTION 5

DC COMPONENTS

5.1 Thermistor 12
5.2 Solenoid Valve 12
5.3 Igniter 12
5.4 High Voltage Cable 13
5.5 Electrode 13
5.6 Control Panel 13
5.7 Climate Control Heater 13
5.8 LED Display Panel 14/16
5.9 Lower Board 14/16
5.10 Door Switch 18
5.11 Fuses 18
5.12 Thermo Disc 18
5.13 Thermo Fuse 18

SECTION 6

LP GAS

LP Gas Requirements 19

SECTION 7

LP GAS COMPONENTS

7.1 Manual Gas Shut-Off Valve 19
7.2 Orifice 19
7.3 Flame Sensing 20
7.4 Burner 20

CONTENTS

PAGE NO.

SECTION 7

7.5 Flue Baffle 20
7.6 Flue Tube 20

SECTION 8

COOLING UNIT

8.1 Leveling 21
8.2 Ventilation 21
8.3 Ventilator Fans 21
8.4 Air Leaks 22
8.5 Interior Liner Seal to Frame 22
8.6 Door Position 23
8.7 Ambient Temperature 23
8.8 Cooling Unit 23
8.9 Food Storage 23
8.10 High Humidity 23

SECTION 9

WIRING

9.1 Internal Wiring 25
9.2 External Wiring 25
9.3 Wiring Schematics 25

SECTION 10

ERROR CODES

10.1 Codes 25

SECTION 11

DIAGNOSTIC MODE

11.1 Diagnostic Test 25

SECTION 12

ICE MAKER

12.1 Operation 26
12.2 Mold Heater 26
12.3 Ice Ejector 26
12.4 Mold Thermostat 26
12.5 Shut Off Arm 27
12.6 Mold Switches 27
12.7 Timing Motor 27
12.8 Water Valve 27
12.9 Ice Maker Replacement 28
12.10 Water Fill Adjustment 28
12.11 Water Supply 28
12.12 Wiring Schematics 28

This program will address the most common system problems associated with the RM3762 and RM3962 refrigerators supplied by Dometic Corporation. Our intent is to provide you with a guideline of checks to make, should you encounter one of the following symptoms.

SYMPTOM	CAUSE	SECTION & PAGE
1. No operation - no panel lights	Operation	**1, page 06**
	DC Volts	**4, page 10**
	Fuse	**5, page 18**
	Wiring	**5, page 14**
	Control Panel	**5, page 13**
	LED Display Board	**5, page 14**
	Lower Circuit Board	**5, page 14**
2. No operation - has panel lights	Operation	**1, page 06**
	DC Volts	**4, page 10**
	Thermistor	**5, page 12**
	Wiring	**5, page 14 & section 9, page 25**
	Lower Circuit Board	**5, page 14**
3. No AC operation - operates on gas mode	Operation	**1, page 06**
	AC Volts	**2, page 10**
	Fuse	**5, page 18**
	Heating Element	**3, page 10**
	Wiring	**5, page 14 & section 9, page 25**
	Lower Circuit Board	**5, page 14**
4. No Gas operation - operates on AC mode	Operation	**1, page 06**
	LP Gas	**6, page 19**
	Manual Gas Valve	**7, page 19**
	Igniter	**5, page 12**
	High Voltage Cable	**5, page 13**
	Electrode	**5, page 13**
	Solenoid	**5, page 12**
	Wiring	**5, page 14 & section 9, page 25**
	Lower Circuit Board	**5, page 14**
5. Insufficient cooling on all modes.	Ventilation	**8, page 21**
	Leveling	**8, page 21**
	Ambient Temperature	**8, page 23**
	Air Leaks	**8, page 22**
	Thermistor	**5, page 12**
	Cooling Unit	**8, page 23**
6. Insufficient cooling on AC - cools properly on gas mode.	AC Volts	**2, page 10**
	Heating Element	**3, page 10**
	Lower Circuit Board	**5, page 14**
7. Insufficient cooling on Gas - cools properly on AC mode.	LP Gas	**6, page 19**
	Orifice	**7, page 19**
	Flue Baffle	**7, page 20**
	Flue Tube	**7, page 20**
	Burner	**7, page 20**
	Lower Circuit Board	**5, page 14**
8. Freezes.	Thermistor	**5, page 12**
	Lower Circuit Board	**5, page 14**
	DC Volts	**4, page 10**

SYMPTOM	CAUSE	SECTION & PAGE
9. Check light on	DC Volts Wiring LP Gas Manual Gas Valve Solenoid Orifice Burner Flame Sensing Lower Circuit Board	**4, page 10** **5, page 14 & section 9 page 25** **6, page 19** **7, page 19** **5, page 12** **7, page 19** **7, page 20** **7, page 20** **5, page 14**
10. Interior light on when door is closed	Wiring Door Switch Door Position	**5, page 14 & section 9 page 25** **5, page 18** **8, page 23**
11. Rapid formation of frost	Food Storage Interior Liner to Frame High Humidity Air Leaks	**8, page 23** **8, page 22** **8, page 23** **8, page 22**
12. Water on frame	Interior Liner to Frame High Humidity Air Leaks Climate Control Heater	**8, page 22** **8, page 23** **8, page 22** **5, page 13**

SECTION 1

Refrigerator Operation

DISPLAY PANEL RM3762 , RM3962

Refrigerator Control Panel

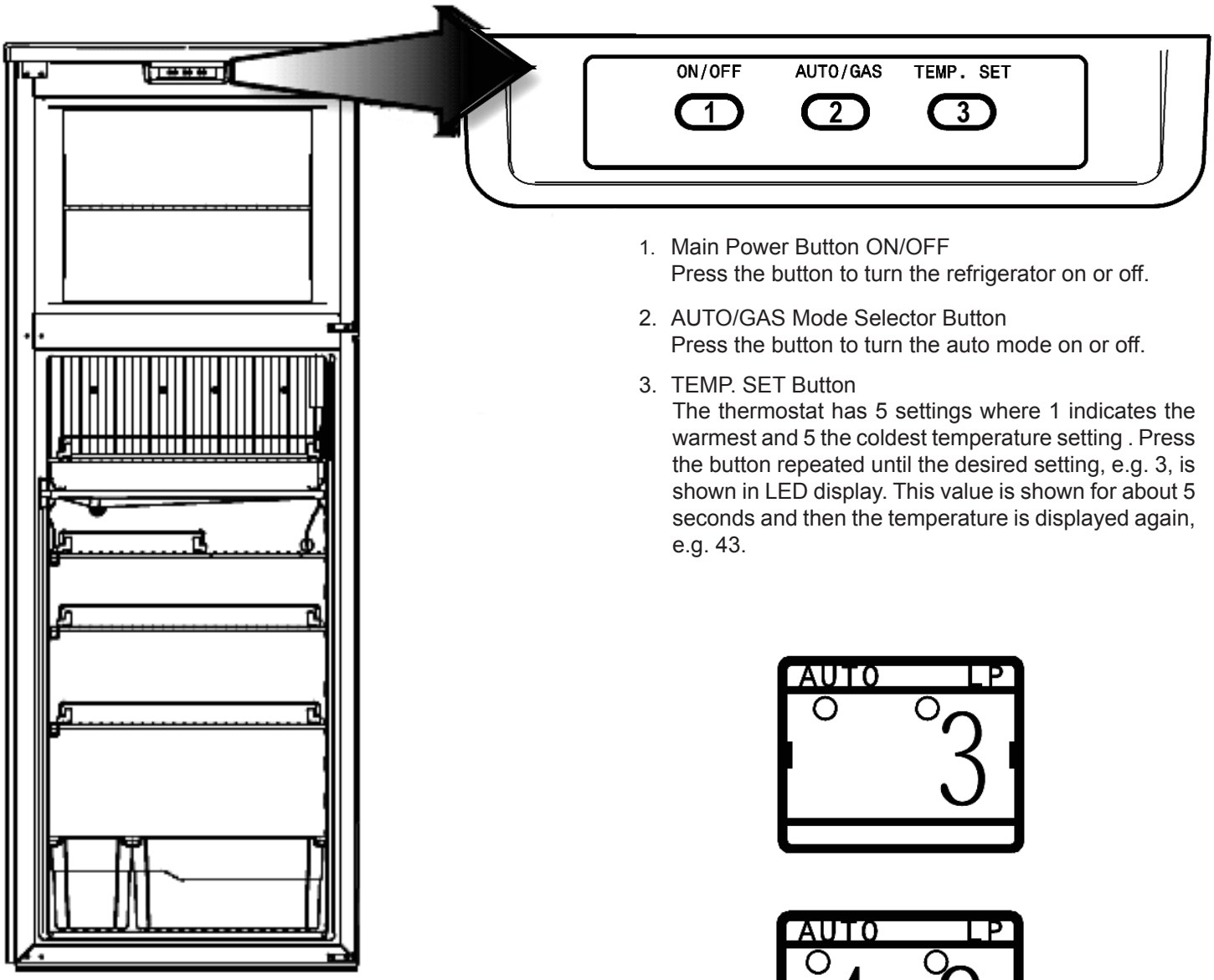

1. Main Power Button ON/OFF
   Press the button to turn the refrigerator on or off.
2. AUTO/GAS Mode Selector Button
   Press the button to turn the auto mode on or off.
3. TEMP. SET Button
   The thermostat has 5 settings where 1 indicates the warmest and 5 the coldest temperature setting . Press the button repeated until the desired setting, e.g. 3, is shown in LED display. This value is shown for about 5 seconds and then the temperature is displayed again, e.g. 43.

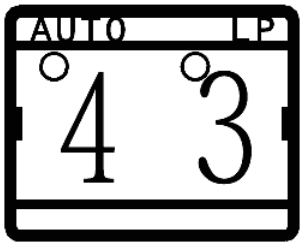

Refrigerator Control Panel
LED Display Panel

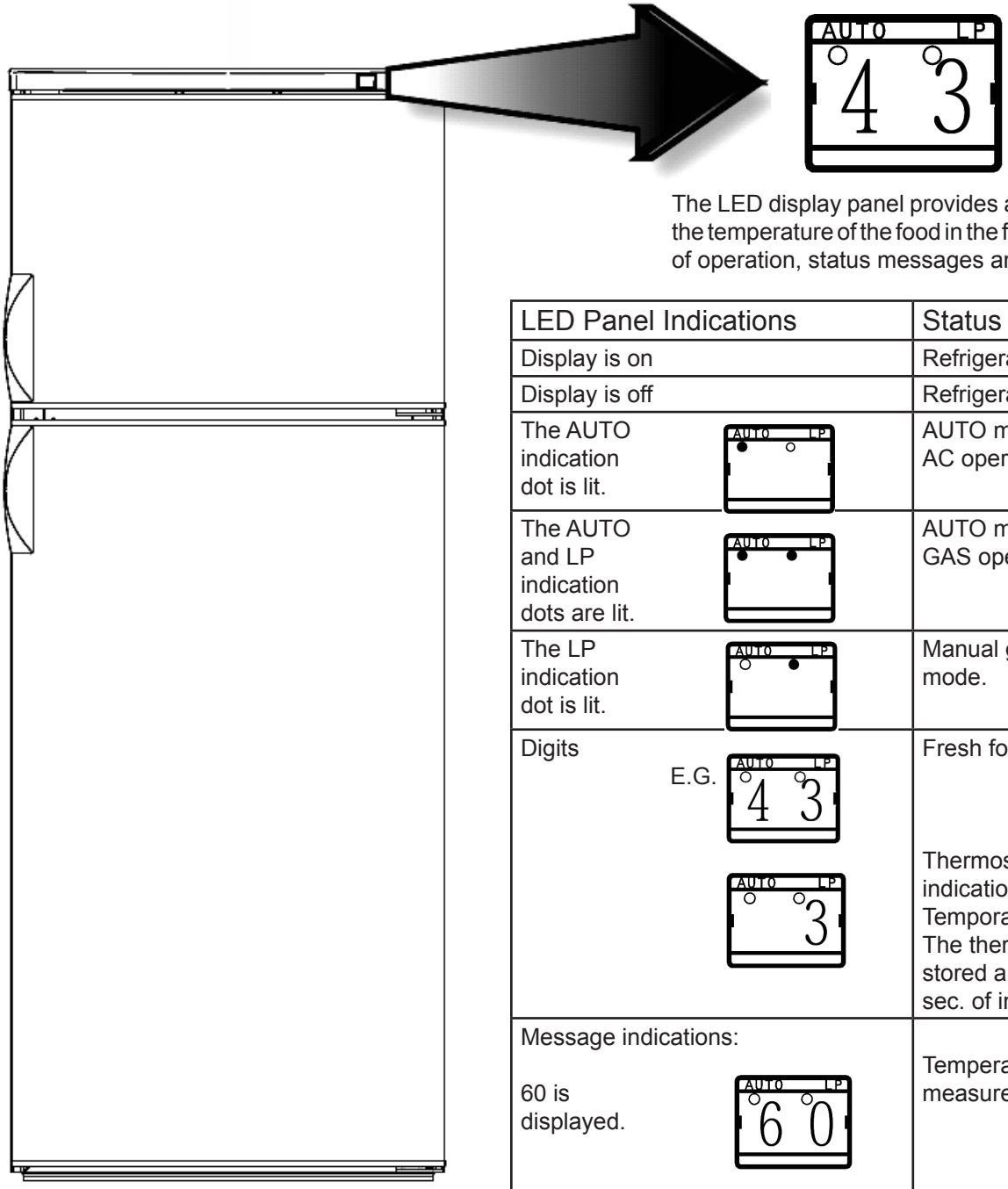

The LED display panel provides a quick visual indicator of the temperature of the food in the fresh food cabinet, modes of operation, status messages and alarm conditions.

LED Panel Indications	Status Information
Display is on	Refrigerator on
Display is off	Refrigerator off
The AUTO indication dot is lit.	AUTO mode and AC operation
The AUTO and LP indication dots are lit.	AUTO mode and GAS operation
The LP indication dot is lit.	Manual gas operation mode.
Digits E.G. 4 3	Fresh food temperature.
3	Thermostat range setting indication (1 - 5). Temporary during setting. The thermostat settings are stored automatically after 5 sec. of inactivity
Message indications: 60 is displayed.	Temperature is above measurement range.
LP is flashing (The message alternates between LP and the temperature.) 1 P	Gas operation lock out. (Check gas.)

REFRIGERATOR OVERVIEW

Absorption Cooling System

In an absorption refrigerator system, ammonia is liquefied in the finned condenser coil at the top rear of the refrigerator. The liquid ammonia then flows into the evaporator (inside the freezer section) and is exposed to a circulating flow of hydrogen gas, which causes the ammonia to evaporate, creating a cold condition in the freezer. When starting this refrigerator for the very first time, the cooling cycle may require up to four hours of running time before the cooling unit is fully operational. The tubing in the evaporator section is specifically sloped to provide a continuous movement of liquid ammonia, flowing downward by gravity through this section.

Importance of Leveling

If the refrigerator is operated when it is not level and the vehicle is not moving, liquid ammonia will accumulate in sections of the evaporator tubing. This will slow the circulation of hydrogen and ammonia gas, or in severe cases, completely block it, resulting in a loss of cooling. Any time the vehicle is parked for several hours with the refrigerator operating, the vehicle should be leveled to prevent this loss of cooling. The vehicle needs to be leveled only so it is comfortable to live in (no noticeable sloping of floor or walls). When the vehicle is moving, the leveling is not critical, as the rolling and pitching movement of the vehicle will pass to either side of level, keeping the liquid ammonia from accumulating in the evaporator tubing.

Operation

Before starting the refrigerator, check that all the manual gas valves are in the ON position. DO NOT forget the manual shutoff valve on the rear of the refrigerator. This refrigerator is equipped with a control system, which can be set to automatically select either 120V AC or LP gas operation (AUTO mode), or if desired LP gas only (GAS mode).

⚠ WARNING

Most LP gas appliances used in recreational vehicles are vented to the outside of the vehicle. When parked close to a gasoline pump, it is possible that the gasoline fumes could enter this type of appliance and ignite from the burner flame, CAUSING A FIRE OR AN EXPLOSION.

FOR YOUR SAFETY, when refueling, shut off all LP gas appliances which are vented to the outside.

Automatic Energy Selector Control System

The refrigerator is equipped with an automatic energy selector control system. The user turns the refrigerator on, selects the desired temperature and then, the refrigerator automatically selects the most suitable energy source available (either 120V AC or LP gas operation). The system can be set by the user to be fully automatic (AUTO mode is selected) or to operate on LP gas only (AUTO mode is off). The refrigerator controls will work down to 9.6V DC (Gray incased module) or 8.5V DC (Flip cover module).

AUTO MODE
When the refrigerator is in the AUTO mode, it automatically uses the most efficient energy source that is available for operation. Should a more efficient energy source become available during operation, the refrigerator controls change from the current energy source to the more efficient energy source as follows:

1. AC operation (if 120V AC is available). AC operation is only possible in AUTO mode.
2. GAS operation (if 120V AC is not available).

GAS MODE (manual LP gas operation)
When AUTO mode is turned off, the refrigerator uses GAS as energy source - even if AC is available.

Startup

Before starting the refrigerator:
- Check that all manual gas valves are in the on position.
- Make sure that a continuous 12V DC supply is available for the electronic control to function.

To start the refrigerator:
1. Press the ON/OFF button.
2. Select operation mode:
   - AUTO mode (AC and GAS)
     Press the AUTO/GAS mode selector button (if not already on).
   - GAS mode (gas operation only).
     Press the AUTO/GAS mode selector button to turn off the AUTO mode (if not already off).

Adjusting The Thermostat

The thermostat controls both the gas and electric operation. Thus it is not necessary to reset each time a different energy source is employed. The adjustable thermostat ranges from 1 - 5 where 5 signifies the coldest temperature setting. Press the button repeatedly until the desired setting, e.g. 3, is shown in the LED display. This value is shown for about 5 seconds and then the temperature is displayed once again.

NOTE: Do not continue to reset GAS operation if the LP is flashing in the display after several tries. LP flashing (message alternates between LP and the temperature) indicates gas operation lockout (Flame Failure).

Turning Off The Refrigerator

The refrigerator may be shut off while in any mode of operation by pressing the main power ON/OFF button (OFF position). This shuts off all DC power to the refrigerator, including the interior light. If the refrigerator will not be in operation for a period of weeks, it should be emptied, defrosted, cleaned and the doors left ajar.

Description Of Operating Modes

Auto Mode

When operating in the AUTO mode, the AUTO mode indicator dot is lit. The control system will automatically select between AC and GAS operation with AC having priority over GAS. If the control system is operating with AC energy and it then becomes unavailable, the system will automatically switch to GAS. As soon as AC becomes available again the control will switch back to AC operation. **Gas operation** (When 120V AC is not available): The control system will activate the ignition system and will make three attempts to light the burner for a period of approximately 45 seconds each, with two minute rest (purge) intervals between attempts. (Some versions may only have 1 attempt). If unsuccessful, LP will be flashing (the message alternates between LP and the temperature) in the display. To restart an ignition attempt with LP flashing in the display turn the unit off, wait a few seconds and turn back on. The control system will attempt a new ignition sequence. If 120V AC becomes available while LP is flashing, the refrigerator will operate on AC but the LP flashing will not turn off until the main power ON/OFF button is pressed to the OFF then ON position.

GAS MODE

When operating in the GAS mode, the AUTO indication dot will be off and the LP indication dot is lit. This mode provides LP gas operation only. The control system will activate the ignition system and will make three attempts to light the burner for a period of approximately 45 seconds each with two minute (purge) intervals between attempts. (Some versions may only have 1 attempt). If unsuccessful, the display will flash LP. To restart GAS operation, press the main power ON/OFF button to the OFF and then ON position. The control system will attempt a new ignition sequence. If the refrigerator has not been used for a long time or the LP tanks have just been refilled, air may be trapped in the supply lines. To purge the air from the lines may require resetting the main power ON/OFF button three or four times. If repeated attempts fail to start the LP gas operation, check to make sure that the LP gas supply tanks are not empty and all manual shutoff valves in the lines are turned on.

Limp Mode

This control system contains a feature where it will continue to operate the cooling system in event of a failure of a major operating component. If the power modules cannot communicate, the control system will revert to full AUTO operation selecting the best energy source available with AC first and GAS second priority. The temperature setting will be maintained at mid-position. If the control cannot read the temperature sensor, then the control will run the cooling unit continuously at the energy source available. The refrigerator will continue to operate in this mode indefinitely or until a new sensor is installed and the system is reset (Gray incased control module only).

Low Ambient Control

In colder weather, the temperature inside the absorption refrigerator lower box tends to hold the temperature inside for a very much longer period of time, with very long periods in between ON/OFF cycling of the heat source; this is OK for any food product inside the refrigerator cabinet, but is not OK for the freezer compartment (if it happens to have perishable product inside). Because of the long time in between cycling ON/OFF, there is a chance that the temperature may rise above freezing in the freezer compartment, resulting in food spoilage. This is why we have a low ambient control. If it so happens that the temperature in the refrigerator has satisfied the thermostat setting, and the CUT-OUT threshold has been reached, the refrigerator cycles OFF. If the temperature remains at lower than the CUT-IN threshold for 35 minutes or longer, the LAC output will be activated; this output, typically, is connected to the interior lamp situated inside the refrigerator compartment. The warmth generated by the lamp slowly raises the temperature inside the refrigerator cabinet to the CUT-IN threshold; when CUT-IN is achieved, the refrigerator cycles back ON again. At this point, the LAC output is de-activated, and the interior lamp turns OFF. The refrigerator will now assume normal operation, and will continue to cool until thermostat is satisfied once more. If it should so happen that CUT-IN is not achieved again within 35 minutes, the LAC process will be initiated once more (and any time thereafter) as required.

Temporary Gas Lockout

If alternator (D+) is connected, the gas operation will automatically be locked out for a period of 15 minutes when the engine is switched off. This will prevent gas operation e.g. when stopping at a refueling station.

Auto Mode is Turned Off (Gas Mode)

The system operates on LP gas only. The control system activates the ignition system and makes one attempt to light the burner. **NOTE:** The temporary gas lockout feature does not work when the AUTO mode is turned off! Consequently, when parking close to a gasoline pump all LP gas appliances vented to the outside of the vehicle must be turned off. Otherwise gasoline fumes from gasoline pumps might enter LP gas appliance and these can then ignite from the burner flame and cause a fire or an explosion.

SECTION 2 AC VOLTAGE

AC Voltage Requirements

⚠ WARNING

This is an energized circuit. Shock can occur if not tested properly. Testing is to be done by a qualified service technician.

The refrigerator is a 120V AC, 60 Hz appliance. The proper operating range is 108 to 132 volts. If voltage drops below 108 volts, cooling efficiency will decrease with voltage decrease. Check the AC volts at the receptacle where the refrigerator is attached. If voltage is outside of the proper operating range, correct the power source problem.

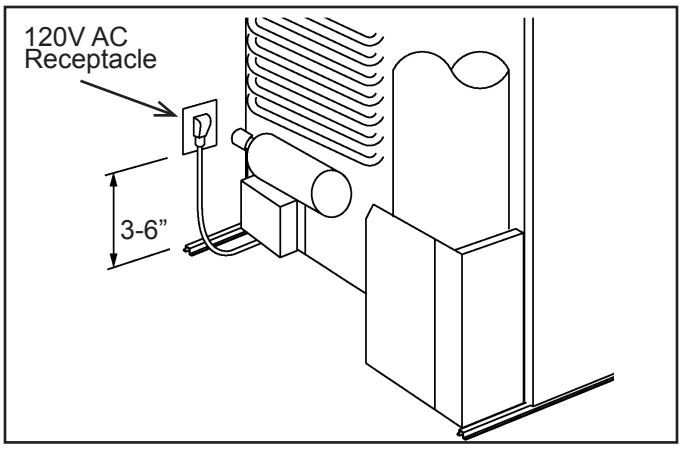

The refrigerator is equipped with a grounded three-prong plug for protection against shock hazards. It should be plugged directly into a properly grounded three-prong receptacle. **Do not cut or remove the grounding prong from this plug!** The free length of the cord is 2 feet and therefore recommended that the receptacle be located to the left side (opposite side of refrigerator burner assembly) of the refrigerator (viewed from the rear). To allow easy access through the vent door, place the receptacle 3-6” above the refrigerator mounting floor. The cord should be routed to avoid direct contact with the burner cover, flue cover or any other components that could damage the cord insulation.

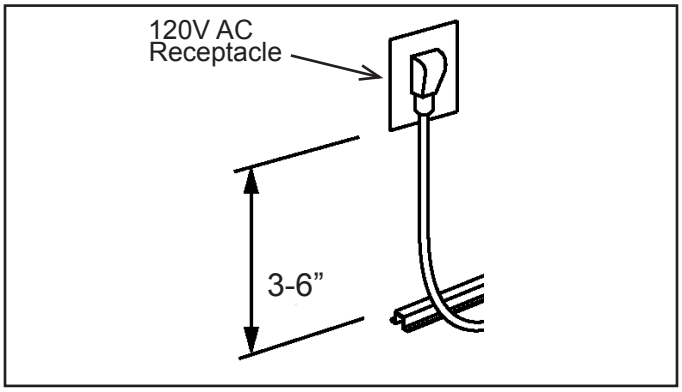

The refrigerator will not switch to another mode of operation until all AC power is lost.

SECTION 3 AC COMPONENTS

Heating Element

The heating element is designed to deliver a predetermined amount of heat to the cooling unit. To check a heating element, remove the heater leads from the printed circuit board and measure for proper resistance across the two leads with a properly calibrated ohm meter. This check is to be done with the heating element at room temperature. You should obtain the following readings ± 10%.

Model	Watts	Ohms	Amps
RM3762	325	44	2.7
RM3962	325	44	2.7

Note: Never over or under size the AC heater.

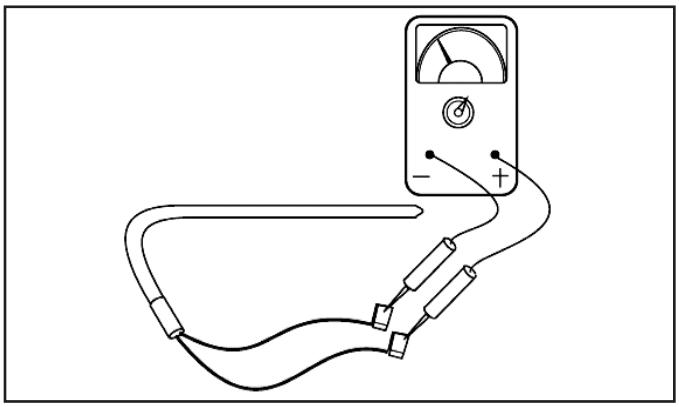

SECTION 4 DC VOLTAGE

12V DC Connection

The refrigerator requires a continuous 12V DC supply to maintain the automatic energy system. The connection is made to the positive (+) and negative (-) terminals of the terminal block on back of the refrigerator.

Correct polarity must be observed when connecting to the DC supply. Do not use the chassis or vehicle frame as one of the conductors. Connect two wires at the refrigerator and route to the DC supply. The connections must be clean, tight and free from corrosion.

Ensure that the wires from the battery to the refrigerator are able to handle the load. The distance the current must travel from the battery to the refrigerator dictates the AWG wire size to be used. Inadequate wire sizes can result in a voltage drop which affects the refrigerator performance.

Recommended wire sizes are displayed in the following table:

Wire Length	AWG
17 ft. (5m)	14
27ft. (8m)	12

Example: If the distance between the refrigerator and the 12V DC supply is 17 ft, the total wire length is 34 ft and a wire size of 14 AWG should be used.

Clean Direct Current (DC) power is mandatory for high-tech circuits to operate as designed. A battery will provide straight line DC power. The converter and alternator produce DC power by a series of diodes that rectify AC current to DC. The Dometic control system will only tolerate up to 6V AC on the DC line. AC ripple can be measured by a digital voltmeter set on the AC scale at the main DC terminal block connections at the refer. Six volts AC or less is acceptable. If AC volts exceed 6 on the DC incoming line the power source should be cleaned up. AC voltage in excess of 6 volts will affect the processor and create erratic operation. When testing for AC ripple on the DC line put a load on the converter. The operational range of the unit is a minimum of 9.6V DC to a maximum of 22V DC (Gray incased control module) or 8.5V DC to 18V DC for (Flip cover control module). The refrigerator requires at least 9.6 volts DC for proper operation; however, the panel lights will continue to illuminate until voltage has dropped to 4V DC or below (Gray incased control module). **Do not** use the body or chassis of the RV as a substitute for either of the two conductors. The refrigerator must be connected to the battery circuit with two wires of adequate capacity to avoid voltage drop. Proper polarity is crucial for refrigerator operation. **No other electrical equipment or lighting should be connected to the refrigerator circuit**. Just because you can read volts does not mean you have the amps to operate the control system. If relays buzz, lights go dim or out during operation, this could indicate there is a loose connection somewhere.

Main Terminal Block

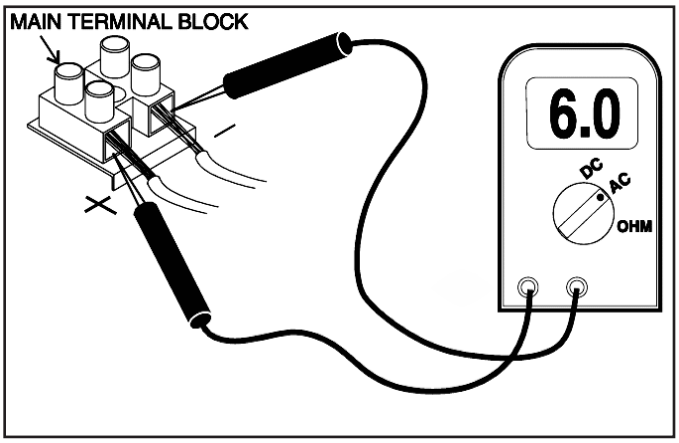

Grounds

The operation of the Dometic refrigerator is also dependent on good, clean ground connections. Loose or corroded ground terminals create a unknown resistance factor that can affect the voltage detected by the Power Module. A loose negative DC wire will create a negative millivolt signal that the control board will pick up and create erratic operation. Check the integrity of the grounds from the refrigerator all the way to the power source/battery. Clean or tighten any suspicious looking connections.
NOTE: The DC terminal block below the control board should be cleaned and tightened at all wires.

Alternator (D+) Connection

The refrigerator requires the connection of a signal wire from the alternator (D+) in order to maintain the temporary gas lockout function. The gas operation will automatically be locked out for a period of 15 minutes when the engine is switched off. **NOTE:** The temporary gas lockout feature does not work when the AUTO mode is turned off! Consequently, when parking close to a gasoline pump all LP gas appliances vented to the outside of the vehicle must be turned off. Otherwise gasoline fumes from gasoline pumps might enter LP gas appliance and these can then ignite from the burner flame and cause a fire or an explosion.

Connect the vehicles alternator (D+) to the D+ on the terminal block.

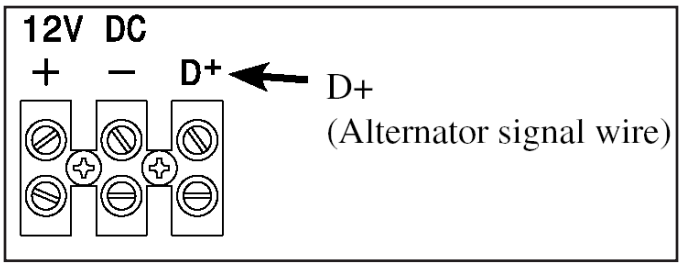

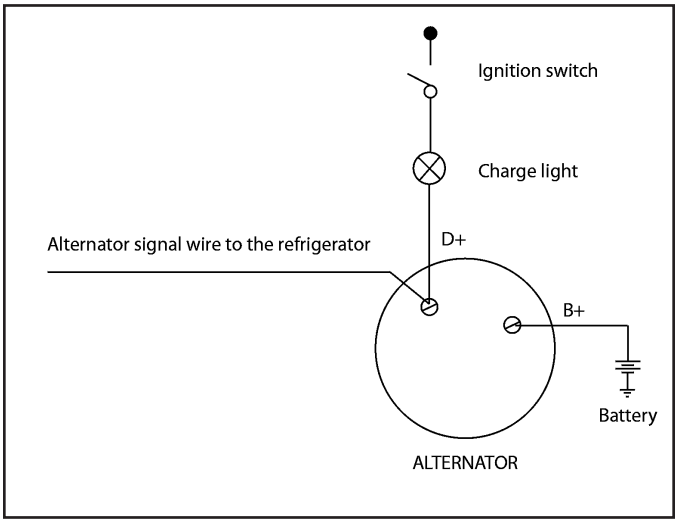

SECTION 5 DC COMPONENTS

5.1 Thermistor

Disconnect the thermistor harness from the P2, 2-pin terminal (Gray incased control module) or J3, 2-pin terminal (Flip cover control module) on the lower circuit board. Place the thermistor in a glass of ice water (more ice than water), approximately 33° F to 35° F. Wait 8 to 10 minutes. You should get a reading of approximately 8,500 to 9,500 ohms. Always test from the wire side as shown below as not to create a connection problem at the board.

NOTE: The Flip cover control module will NOT run constantly when the thermistor is unplugged or becomes an open circuit. An E2 error code will be observed.

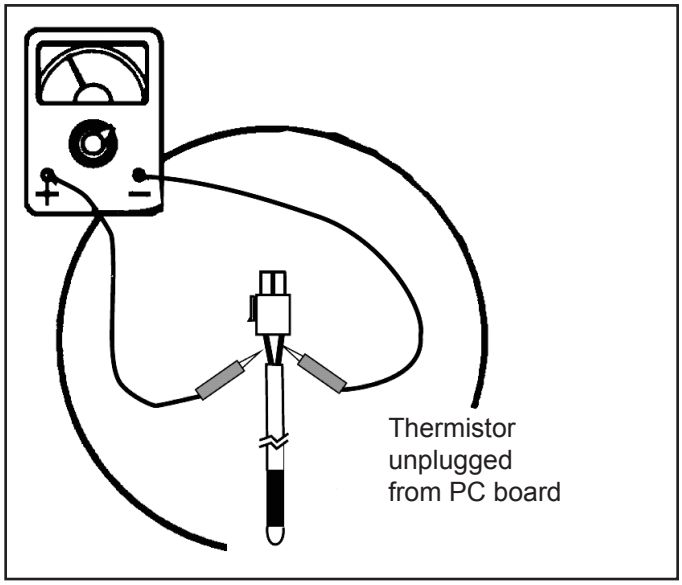

5.2 Solenoid

Check the solenoid coil with a properly calibrated ohm meter. Remove the connectors from the solenoid and measure the resistance across the terminals. The proper reading would be 49 ohms ± 10%. Failure of the solenoid is very unlikely. Next, hook up a manometer at the test port. Then check for DC volts at the gas valve terminals (Yellow +, White -), (some units may have two blue wires) while the unit is in trial-for-ignition. If DC volts are present and pressure is low, replace the valve. If DC volts are not present at the valve while the unit is in trial-for-ignition, verify for DC voltage from control board. **Gray incased module** (P3, terminal 2). **Flip cover module** (J1, pin 4). The voltage should be 9.6V DC or greater.

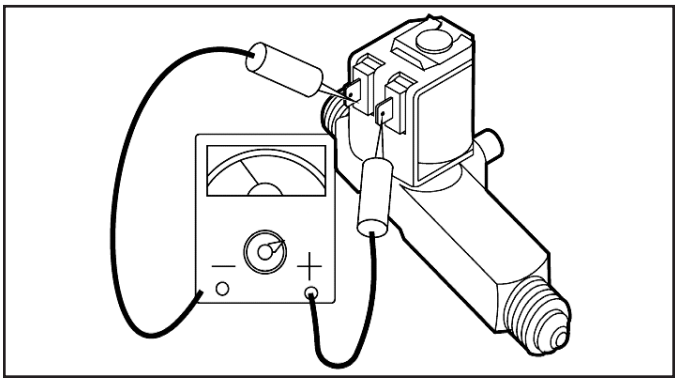

5.3 Igniter

NOTE: The Gray incased module boards use a separate igniter (see below). The flip cover module boards have an integrated igniter.

The igniter used on Dometic model refrigerators, operates on 12V DC. On gas operation the igniter senses the resistance through the flame between the electrode and burner. When there is no flame at the burner, the resistance is high and the igniter begins sparking to light the burner. As soon as the flame is lit, the resistance between the electrode and burner drops and the igniter stops sparking. The resistance is monitored by the igniter, and, if for any reason the flame goes out, the igniter begins sparking until the burner is lit. The resistance between the electrode and burner drops and the igniter stops sparking.

⚠ WARNING

This is an energized circuit. Shock can occur if not tested properly. Testing is to be done by a qualified service technician.

This insures that the flame will always be lit when desired. First verify proper voltage at the positive (Yellow +) and ground (Black –) terminals of the igniter. The reading should be within 1.5 volt of incoming voltage at the main terminal block during trial-for-ignition. Next, remove high voltage cable from igniter. The igniter should produce a sparking sound during trial-for-ignition. If not, replace the igniter. While operation is in the gas mode, the power module and igniter are constantly monitoring the presence of flame. If the flame is blown out, the reignitor will immediately start sparking. When the power module senses the loss of flame (thermocouple voltage below 13-MVDC) the 45 seconds trial for ignition period is started. The igniter installed on the refrigerators as original equipment is part number 2931132019 (RV Gas Model 679). This igniter is rated 50 MA. This igniter may also be used on any other model. When replacing the igniter always provide the product number for proper replacement. **DO NOT** install the Channel Mark 6, Model 12 E igniter (as shown) as a service replacement part. Installation of the Channel Products, Inc., Gasliter Mark 6, Model 12 E, will VOID the Warranty on the refrigerator. The Dometic refer could use a few different igniters. To acquire the proper igniter always provide the product number.

Do not use the Channel Mark 6, Model 12 E igniter.

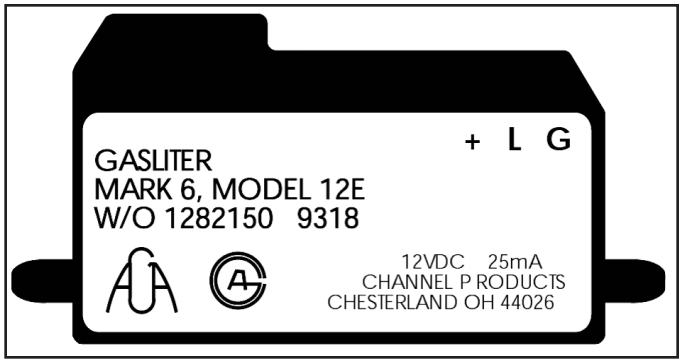

5.4 High Voltage Cable

If sparking starts during trial-for-ignition, the cable is good. If there is no sparking during trial-for-ignition: Disconnect DC power at the refrigerator terminal block or switch unit off. Disconnect high voltage cable from electrode. Reconnect DC power. If there is a sparking sound from the igniter during trial-for-ignition, then replace high voltage cable and/or electrode. On newer units the electrode and high voltage cable are integrated into one component.

5.5 Electrode

Do a visual check for cracks or breaks on the ceramic insulator. A hair-line crack can be hard to see at the electrode. The spark gap must be set at three-sixteenths (3/16”) of an inch from the tip of electrode above the slots in the burner. When adjusting, always loosen the screw and move into place: never try to move without loosening the screw. On newer units the electrode and high voltage cable are integrated into one component. To acquire the proper part always provide the product number.

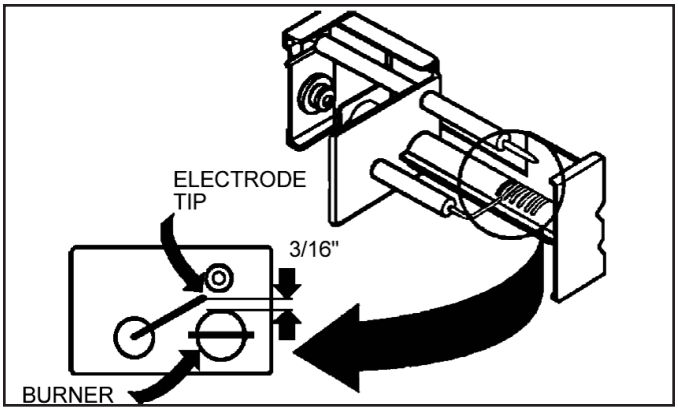

5.6 Control Panel

Check for continuity between the solder joints when the button is held down. If the control panel has continuity it is ok. From the 4 pin connection at the control panel continuity can be tested for proper operation also.

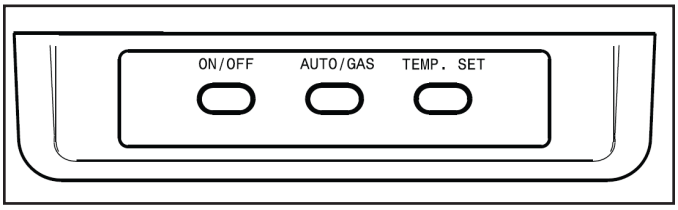

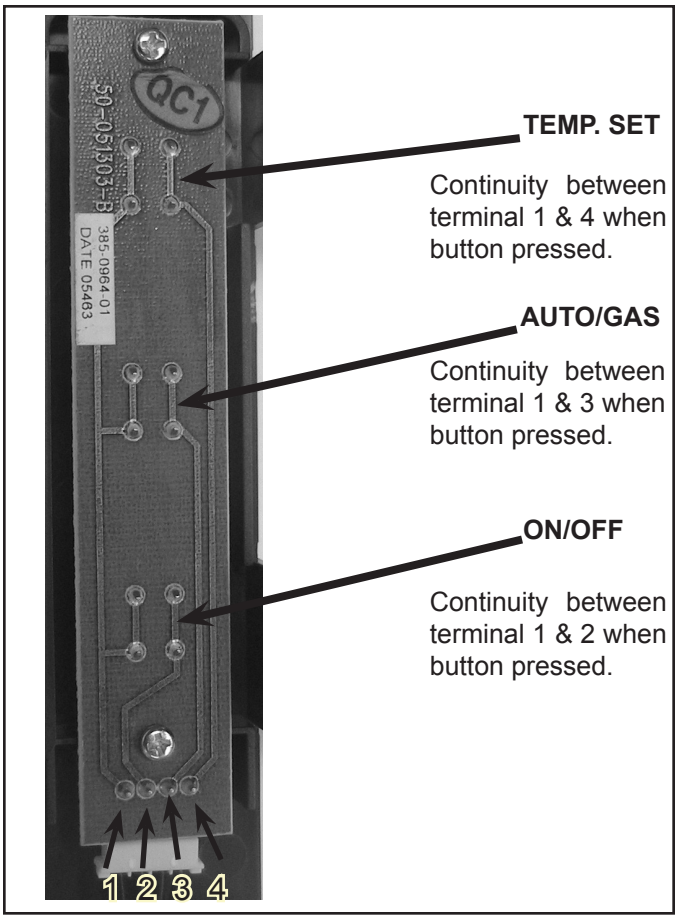

5.7 Climate Control Heater

The climate control heater keeps the frame from sweating in high humidity. Unplug the light green wire from J3 (Gray incased control module) or the light blue wire from P5 (Flip cover control module) and test for proper ohms. From the light green wire or light blue wire to ground the reading should be 24 ohms +/- 10%.

5.8 LED Display Panel

Gray Incased Control Module

With the control panel in the OFF position, check for DC voltage at Plug 1, Terminal 4 (orange wire) positive and terminal 5 (red wire) negative DC volts at the lower circuit board. If no voltage to upper control, then check for input DC volts between J1 positive and J10 negative terminals on the lower circuit board. If no voltage into lower control correct power supply to control system. If DC volts at J1 (positive) and J10 (negative) and no volts on orange wire to upper control and fuse test OK, replace the lower board. Next, with control panel in the ON position, check for DC voltage at the upper circuit board between terminal P1-4 (orange) positive input from lower control , P1-3 (black wire) positive output to lower control, P1-5 (green) positive output to lower control and P1-1 (red) negative and or chassis ground. If no voltage and your previous check verified voltage on the orange wire at the lower board the upper display board or wire harness would be at fault. The orange wire sends power to upper control and when turned on the upper control sends volts back down the green and black wire. The red wire in the harness is the upper display ground (12 volt negative) .

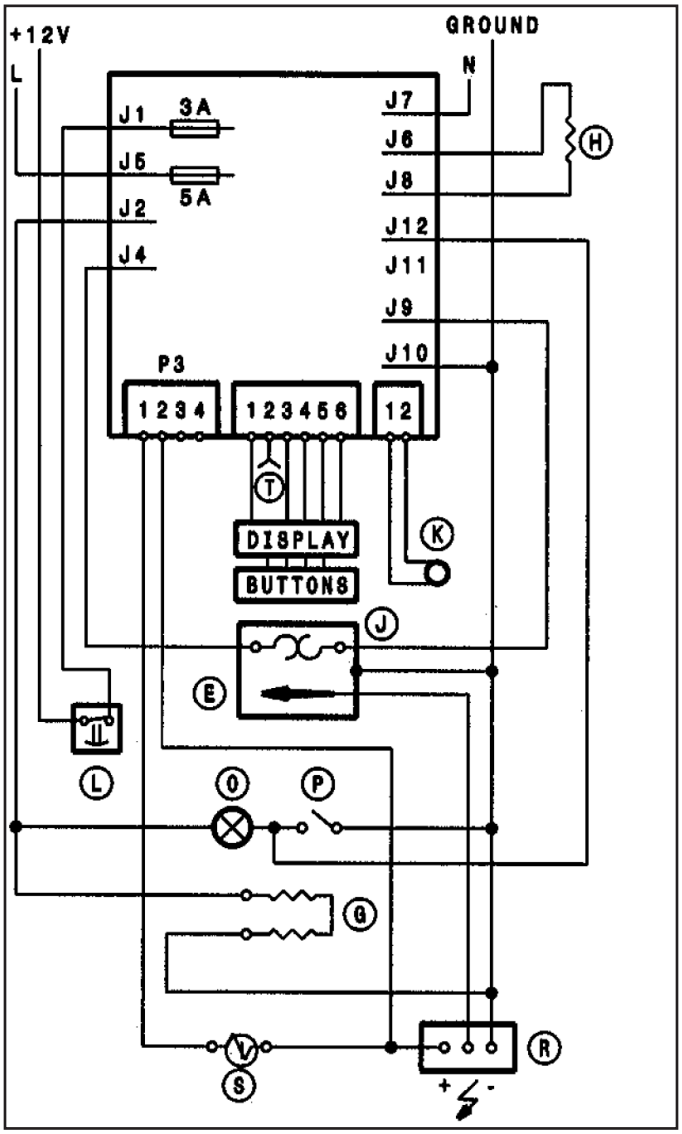

5.9 Lower Board

P1 To upper display board
P2 Thermistor
P3 To gas valve and igniter
J1 Positive 12V DC from thermo disc / terminal block
J2 To interior light
J3 To heating cable for climate control (frame heater)
J4 Negative lead from thermocouple
J11 Open not used on this model (TAG Line)
J12 Low ambient control
J6 AC Neutral (White)
J7 AC Heater
J5 AC Hot (Black)
J8 AC Heater
J9 Positive wire from thermocouple
J10 Negative to Chassis ground at control board
NOTE: Terminals 9 and 10 could be reversed as both terminals are chassis ground on control board.

Lower Board Testing

ALL TESTS ARE TO BE DONE WITH THE REFRIGERATOR IN THE COOLING MODE.

Unplug the thermistor from the control board during lower board testing to assure unit is calling for cooling.

DC Volts

Measure DC voltage between terminal J1 positive and J10 ground. The voltage should be the same as at the positive (+) and negative (–) on DC input terminal block. The operating range is 9.6V DC min to 22V DC max. If the voltage is outside the 9.6V DC to 22V DC range, check power supply, terminal block and correct power source before going on with the test.

AC Mode

⚠ WARNING

This is an energized circuit. Shock can occur if not tested properly. Testing is to be done by a qualified service technician.

Before testing the lower board for AC operation, test upper control board ON/OFF switches, LED display control and wiring harness between upper and lower controls. Next, check that incoming AC voltage is present at terminals J5 (black) and J6 (white) on the circuit board. With the unit in AC mode, check for voltage at the heating element connection terminals J7 and J8 on the circuit board. If no voltage is present and 5 amp AC fuse, 3 amp DC fuse, wiring harness and upper controls test ok, change the lower control board. The AC voltage detection circuit is damaged. Reference to section 11 Dianostic Mode.

RM3762 & RM3962

Gray incased Control Module

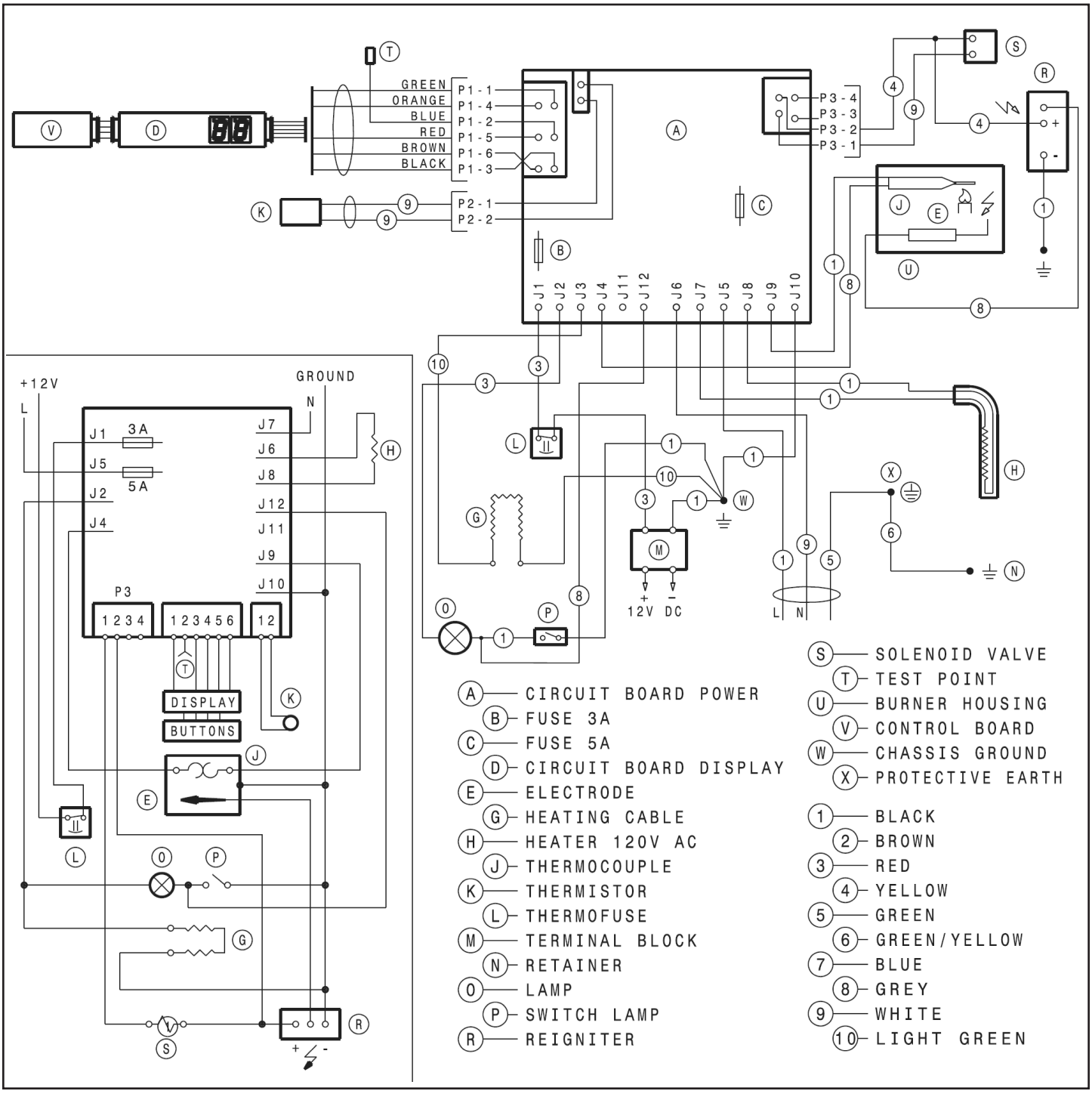

5.8 LED Display Panel

Flip Cover Control Module

The flip cover control module use Bi-directional bus communication. This simply means the lower control board and the upper display module communicate via a single wire, J2-pin 1 (Brown). DC Voltage should always be present at the upper display module between J2-pin 3 (Red+) and J2-pin 2.(Black-). If no DC voltage is present, check for DC voltage at the 8 pin molex connector, between pins 6 & 7. If no voltage is present, correct the power supply to the control system. If DC voltage is present between pins 6 & 7 and no voltage is detected between J2-pin 3 (Red+) and J2-pin 2 (Black-), disconnect the 12v positive lead from the main terminal block for 30 seconds and reconnect (this is to allow the PTC devise to reset). If you still have no voltage, replace the lower control module. If DC voltage is present between J2-pin 3 (Red+) and J2-pin 2 (Black-) and you have no display. Verify the unit is turned ON or the harness & display module may be at fault.

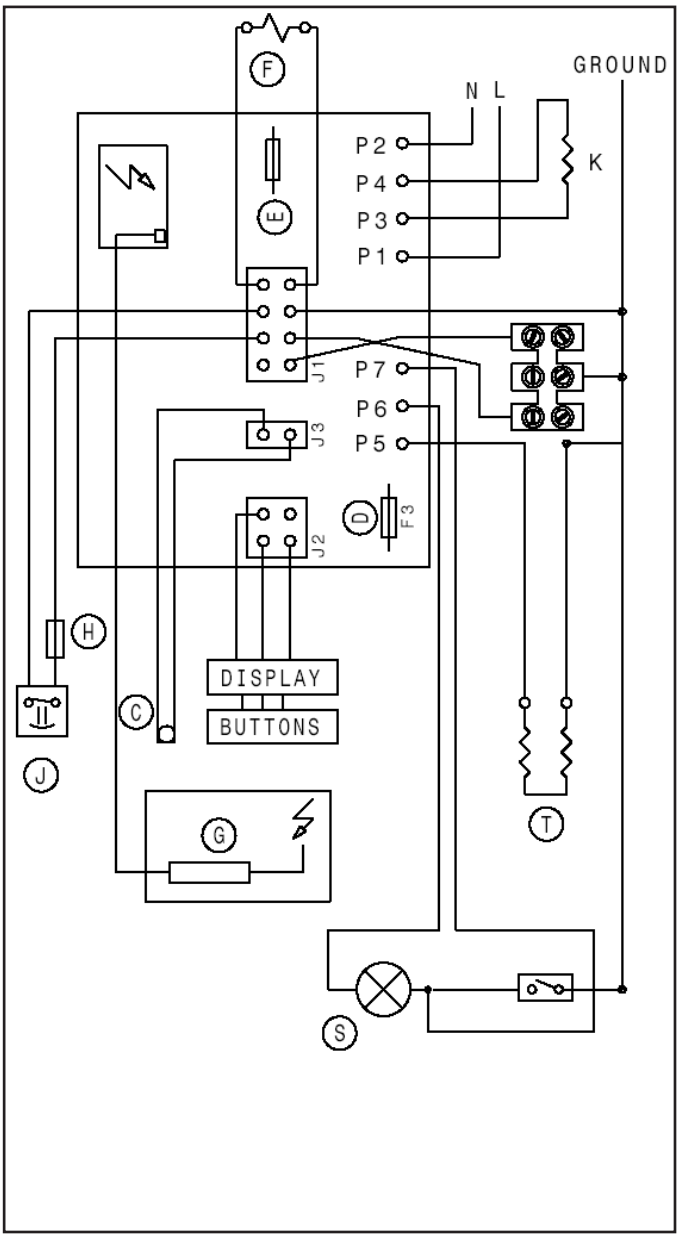

5.9 Lower Board

P1 AC Hot (Black)
P2 AC Neutral (White)
P3 AC Heater
P4 AC Heater
P5 On/Off switched, 12v
P6 On/Off switched, 12v
P7 LAC Heater Output
J1 Pin 1, Not used
Pin 2, 12v output to thermo fuse & thermo disc
Pin 3, 12v return from thermo fuse & thermo disc
Pin 4, Gas Valve
Pin 5, 12v positive from D+
Pin 6, 12v positive from terminal block
Pin 7, 12v negative from terminal block / Ground
Pin 8, Gas Valve
J2 To upper display board
J3 Thermistor

Lower Board Testing

ALL TESTS ARE TO BE DONE WITH THE REFRIGERATOR IN THE COOLING MODE.

DC Volts

Measure DC voltage at the 8 pin Molex connector between Pin 6 (Red wire+) and Pin 7 (Black-). The DC voltage should be the same as at the positive (+) and negative (–) on DC input terminal block. The operating range is 8.5V DC min to 18V DC max. (Damage can occur if the voltage exceeds 22V DC). If the DC voltage is outside the 8.5V DC to 18V DC range, check power supply, terminal block and correct power source before going on with the test.

AC Mode

⚠ WARNING

This is an energized circuit. Shock can occur if not tested properly. Testing is to be done by a qualified service technician.

Before testing the lower board for AC operation, test upper control board ON/OFF switches, LED display control and wiring harness between upper and lower controls. Next check that incoming AC voltage is present at terminals P1 (black) and P2 (white) on the circuit board. With unit in AC mode, check for voltage at the heating element connection terminals P3 and P4 on the circuit board. If no voltage is present and 5 amp AC fuse, 5 amp DC fuse, wiring harness and upper controls test ok, change the lower control board. The AC voltage detection circuit is damaged. Reference to section 11 Dianostic Mode.

RM3762 & RM3962

Flip Cover Control Module

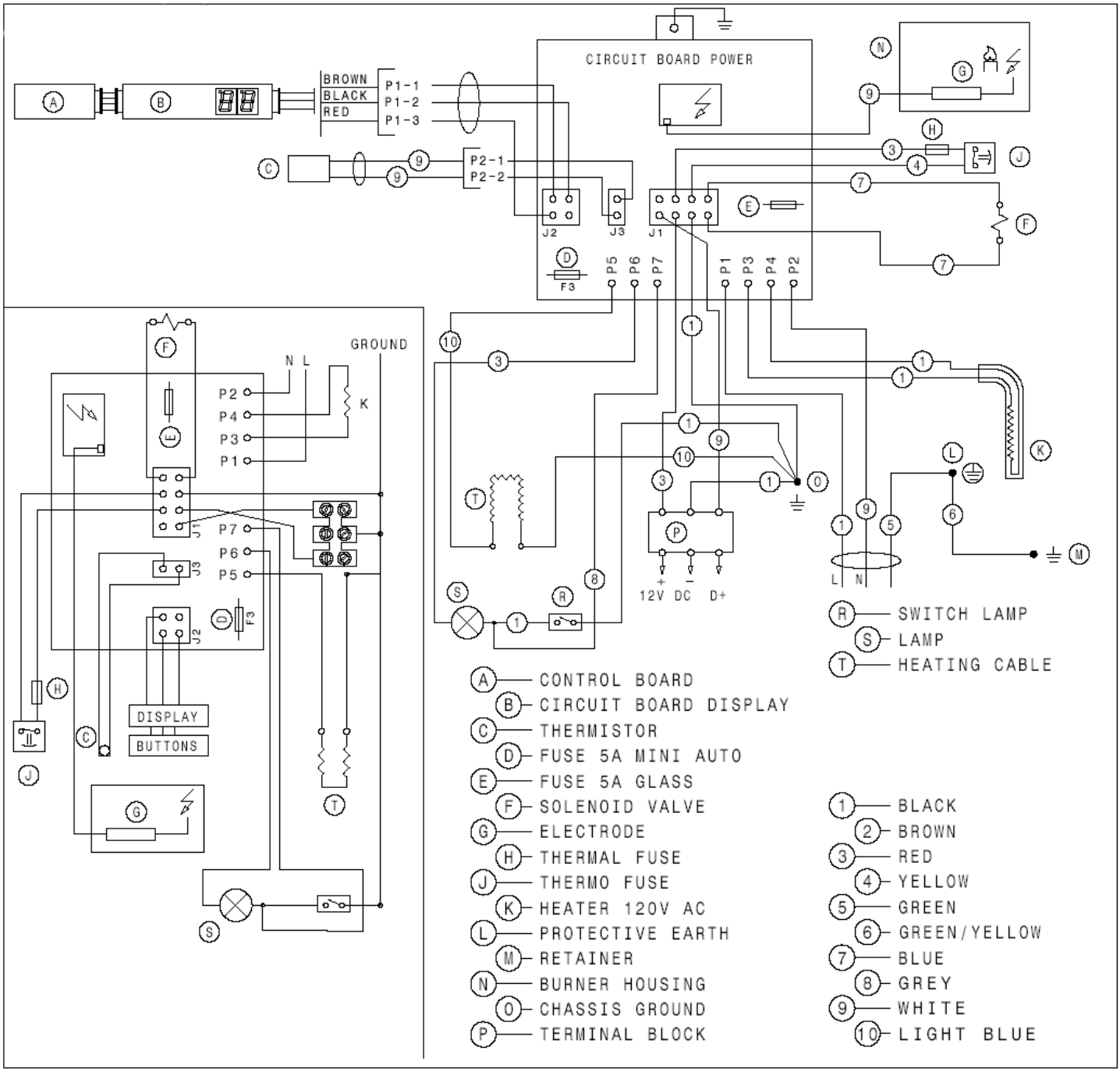

Gas Mode

Note: Gray incased control modules have a 3 try ignition. There is a 2 minute purge cycle between each trial for ignition. Flame failure could take 6 to 7 minutes. Flip cover control modules are a single try system and flame failure will take 45 seconds.

Verify that the following components are good, upper circuit control boards, thermistor, wire harness and fuses. First, check for DC voltage during **trial-for-ignition** at Plug 3, Terminal 1 (white Wire -) and Terminal 2 (yellow wire +) to the igniter and solenoid (Gray incased module). Check for DC voltage at J1, Pin 4 & 8 to the gas valve (Flip cover module). If no voltage is present change the circuit board. If voltage is present, check for voltage at the igniter and solenoid. If no voltage is present, check the wires. To check the flame sense circuit of the lower circuit board, operate the refrigerator on GAS and measure the millivolts between J4 (NEGATIVE) terminal and J10 (POSITIVE) connection from the thermocouple. The thermocouple should produce 20 millivolts minimum. Anything less than 20 millivolts will cause erratic gas operation. The millivolts meter should read between 25 to 35 millivolts with the gas flame burning. When the power module senses the loss of flame (thermocouple millivolts below 13 MVDC) the 45 seconds trial for ignition period is started. Turning the refrigerator OFF/ON while operating in the gas mode may cause a “LP” code.

NOTE: A loose ground will create erratic or no gas operation.

5.10 Door Switch

The door switch is an open switch when the switch arm is depressed (interior light should be off). When the refrigerator door is open the switch is closed (interior light should be on). Check that the switch assembly is properly aligned and that it is not broken. Check the switch assembly for continuity. To do a continuity check, first be sure all power is disconnected or OFF to the refrigerator. Second, remove all wires from the switch assembly, then check the switch. When the switch is depressed, there should not be continuity. When the switch is NOT depressed, there should be continuity. If any of these checks are incorrect, replace the switch. After the check, be sure the switch assembly is wired properly per the wiring diagram.

5.11 Fuses

Gray incased modules have a 3 amp DC fuse to protect the circuit board from internal/external DC shorts. **Flip cover modules** are protected with a PTC devise (Resettable fuse). To rest the fuse, disconnect the 12v positive lead from the main terminal block for 30 seconds and reconnect. Both modules have a 5 amp AC fuse designed to protect the integrity of the AC detection and heater circuit from shorts. The flip cover modules also have a 5 amp DC fuse to protect from external loads such as ventilator fans & the frame heater. All fuses can be checked for continuity. If a fuse blows don’t replace it until the problem has been found. If a fuse blows there is a short or component that has created the problem.

5.12 Thermo Disc

The RM3762/RM3962 cooling units have a Thermo disc located on the boiler. The function of the thermo disc is to shut down the control system in the event the cooling unit over heats. On certain units the thermo disc can be reset by pushing the button in the center. The thermo disc is a replaceable component of the cooling unit. When the disc pops, it is normally an indication of a over heating situation or the cooling unit has a problem and the cooling unit will have to be replaced. The disc can be checked for continuity. The disc is Normally Closed (Has continuity) and opens (No Continuity) when over heated.

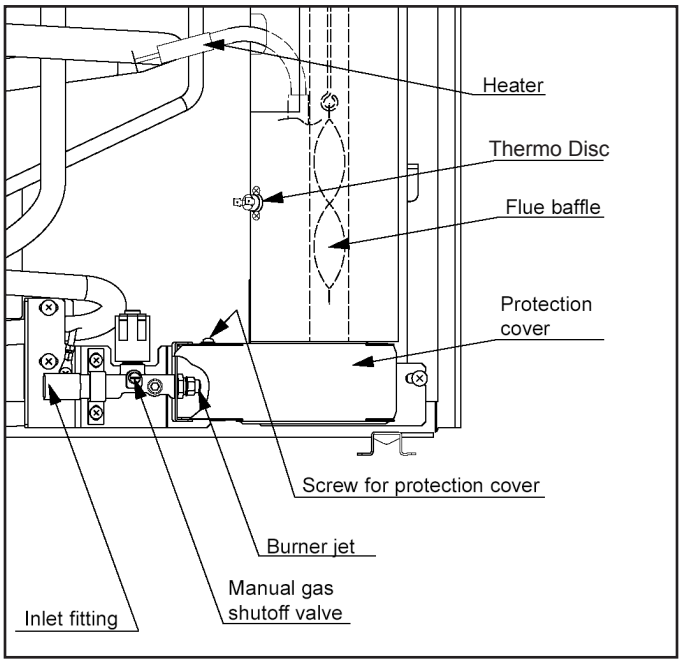

5.13 Thermo Fuse

The flip cover control module uses an add’l thermo fuse for over heating protection. This is located on the back wall behind the burner. It is inline with the thermo disc and if either device is tripped, the cooling cycle is stopped. This will result with a E3 code on the upper display module. The fuse can be checked for continuity. The fuse is Normally Closed (Has continuity) and opens (No Continuity) when over heated.

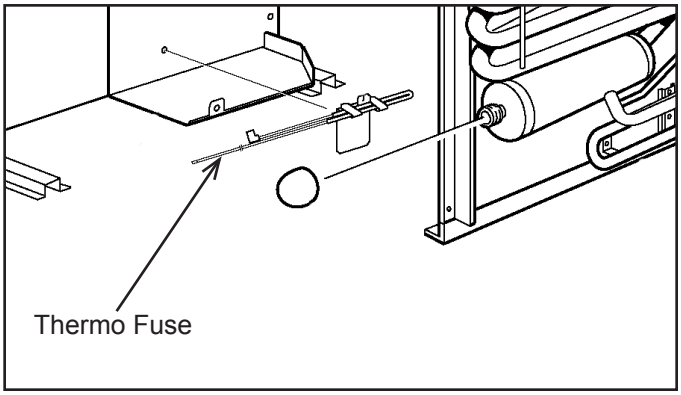

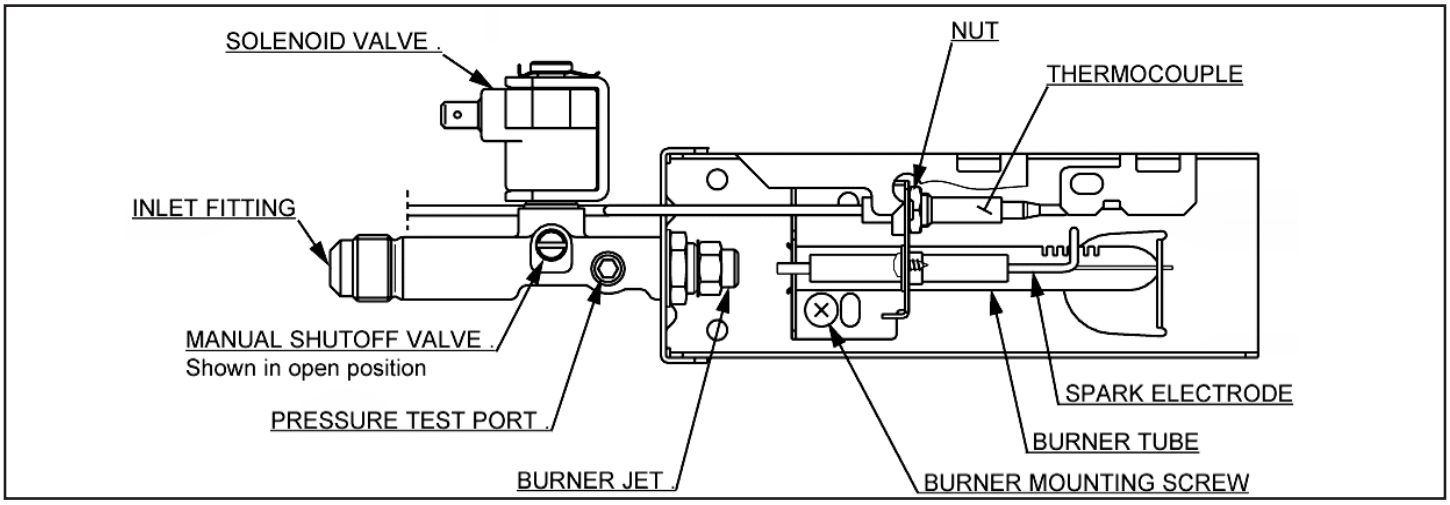

SECTION 6 LP GAS REQUIREMENTS

⚠ WARNING

DO NOT use a flame to check for gas leaks.

The LP gas pressure to the refrigerator should be 11 inches water column with half of all BTU's of the RV turned on. With all other appliances off, the pressure to the refrigerator should not exceed 12 inches water column. To check the gas pressure when the refrigerator is operating, there is a pressure test port below the solenoid valve assembly.

SECTION 7 LP GAS COMPONENTS

7.1 Manual Gas Shutoff Valve

The manual shutoff valve is a non-serviceable part. The valve is part of the solenoid valve assembly. It is very rare to have problems with the manual shutoff or the solenoid assemblies. If you have checked gas pressure and it is low, check pressure at input line to refer. If pressure is 11 inches at input and low at the pressure test port, change solenoid valve assembly. The valve is not opening all the way.

Testing LP Gas Safety Shutoff

The gas safety shutoff must be tested after the refrigerator is connected to the LP gas supply.

To test the gas safety shutoff, proceed as follows:

1. Start the refrigerator according to the instructions, and switch to GAS mode.
2. Check that the gas flame is lit and the GAS mode indicator lamp is on.
3. Close the manual gas shutoff valve at the back of the refrigerator.
4. Wait for the unit to go into flame failure. The display will flash "LP".
5. Remove protection cover from burner and open the manual gas shutoff valve. Do not change any button positions on the control panel. Apply a non-corrosive commercial bubble solution to the burner jet orifice.
6. No bubbles should appear at the opening of the burner jet orifice. The presence of bubbles indicates a defective gas safety shutoff, and service is required.
7. If no bubbles were present at the burner jet orifice, it should be rinsed with fresh water. Be careful not to damage the burner jet orifice. Replace cover and press the main power ON/OFF button "OFF" and back "ON". Normal operation of the burner should return. Allow the burner to operate for a minimum of five minutes.

7.2 Orifice

The Dometic orifice is a brass alloy with a man-made ruby pressed in the center that has been laser-beam drilled in a spiral pattern. The orifice is cleaned by using an alcohol based solvent. Soak the orifice for approximately 1 hour and allow to air dry. Don't insert anything in the center of the orifice because it will harm the man-made ruby. Do not use an air nozzle to blow thru the orifice as the ruby could be moved. Never over or under size the orifice on a Dometic refrigerator. The cooling unit is designed to work with a predetermined amount of heat and modifying the orifice size will decrease cooling. If there is a lack of cooling on gas operation, verify the orifice is the proper size per the chart.

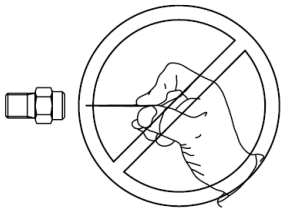

⚠ WARNING

DO NOT use a wire or pin when cleaning the burner jet as damage can occur to the precision opening. This can cause damage to the refrigerator or create a fire hazard.

MODEL	JET SIZE
RM3762	#58
RM3962	#58

Always check the parts list with the model and product number to assure the right jet size.

7.3 Flame Sensing

Gray Incased Control Module (Thermocouple)

The Thermocouple is a component that extends over the burner assembly so its tip is in the path of the flame. During normal gas operation, the thermocouple should produce 25 to 35 millivolts when connected to the lower circuit board.

Any reading below 20 millivolts could cause erratic gas operation. **NOTE:** A reading of 20 or less could be caused by low gas pressure, carbon build up or improper thermocouple location. The thermocouple should be centered over the burner and extend over 3 slots. The control board reads negative millivolts from the thermocouple and the positive lead goes to the ground terminal on the control board. The lower control has a built-in delay when the unit is first turned on. If the lower control reads millivolts in excess of 6 MVDC the control will go into a 30 second gas delay before attempting to light on gas. To test the thermocouple set the meter to DC millivolts. Put the black lead from the meter to terminal J4 and the red lead from the meter to J9 or ground (other lead from thermocouple). Start the unit on gas and measure the DC millivolts produced by the thermocouple. The thermocouple should produce 25 to 35 millivolts within 45 seconds. If the millivolts are 20 or below erratic operation will occur. Anything below 10 to 13, the control board will not keep the gas valve energized and “LP” will be dispayed on the upper panel after the third trial-for-ignition.

Flip Cover Control Module (Flame Rectification)

The flame is detected by a method often called “flame rectification”. A gas flame is slightly conductive and by applying voltage to the spark electrode, a small amount of current will flow through the flame to chassis ground. To detect if a flame is present, this high frequency AC voltage is then “rectified” and converted to DC voltage. As long as this current flow exists, the control module will power the gas valve. The flame sensor is not sensing anything. The flame sensor’s only “claim to fame” is that it is resistant to the effects of being immersed in flame. A flame sensor can become coated with a silica-type material. (Silica is a component of glass and glass is a great insulator.) When this happens, all that is required is a cleaning of the sensor with a light abrasive.

7.4 Burner

The slots in the burner should be directly below the flue tube. The burner should be cleaned periodically, at least once a year. Soak the burner in an alcohol based solvent and allow to air dry. If the burner does not have a good ground it can cause erratic gas operation. The electrode sparks to the burner tube and a erratic ground will cause erratic gas operation.

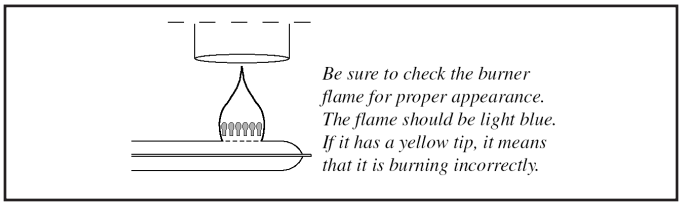

7.5 Flue Baffle

The flue baffle (spiral baffle) is a twisted piece of metal that hangs in the flue tube to slow the heat from the flame to the proper location on the cooling unit. If the flue baffle is too high or low the heat will not be transferred to the cooling unit properly.

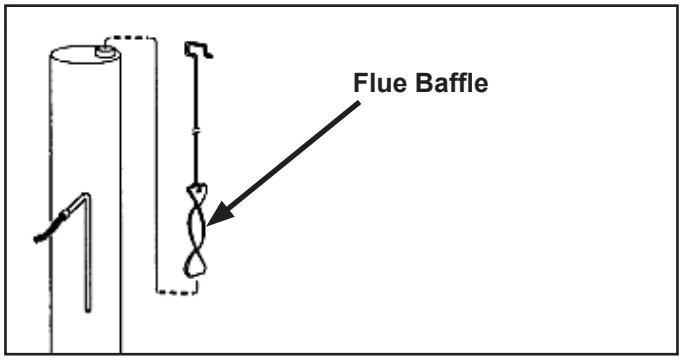

MODEL	ABOVE BURNER	SIZE
RM3762	1-7/8	5-1/8X13/16
RM3962	1-7/8	5-1/8X13/16

Lack of heat transfer to the cooling unit will cause low cooling performance in the gas mode. It should be cleaned periodically, at least once a year. The proper position of the baffle above the burner should be as shown in the chart : **Always Refer to parts list on the model/product number unit you are currently working on.**

7.6 Flue Tube

The flue tube is welded to the boiler of the cooling unit. As heat travels up the flue tube and slows at the flue baffle it transfers heat to the cooling unit. Carbon build up will not allow the heat transfer to the cooling unit and cause lack of cooling on gas. In a rough riding coach there has been rare cases where the weld will crack and create lack of heat transfer to the cooling unit. The flue tube must be cleaned periodically, at least once a year. Clean by using a flue brush, Dometic Part no. 0151404001.

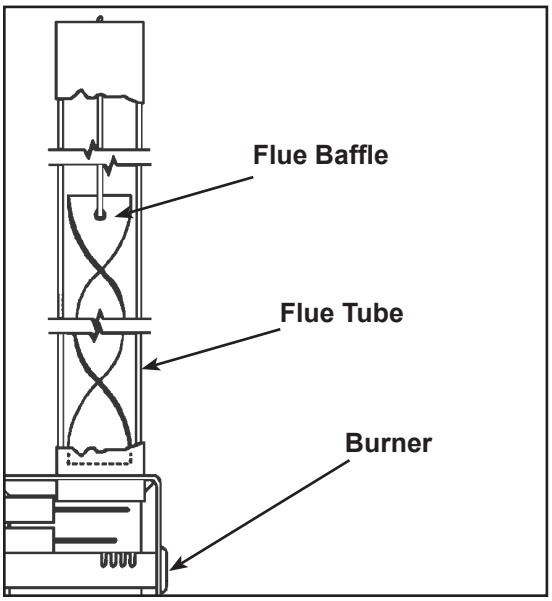

SECTION 8 COOLING UNIT

8.1 Leveling

Leveling is one of the requirements for proper operation of absorption refrigerators. The absorption design utilizes no mechanical pumps or compressors to circulate the refrigerant within the system, so proper leveling must be maintained to provide the correct refrigerant flow. Without proper leveling, refrigerant within the cooling unit will collect and stagnate at certain areas. Without proper refrigerant flow, the cooling process will stop. Absorption refrigerators have a type of cooling unit that utilizes an enclosed pump tube surrounded by a solution to protect the assembly. To ensure proper leveling, the vehicle needs to be leveled so it is comfortable to live in. (No noticeable sloping of floor or walls). When the vehicle is moving, leveling is not critical as the rolling and pitching movement of the vehicle will pass to either side of level, keeping the refrigerant from accumulating in the piping.

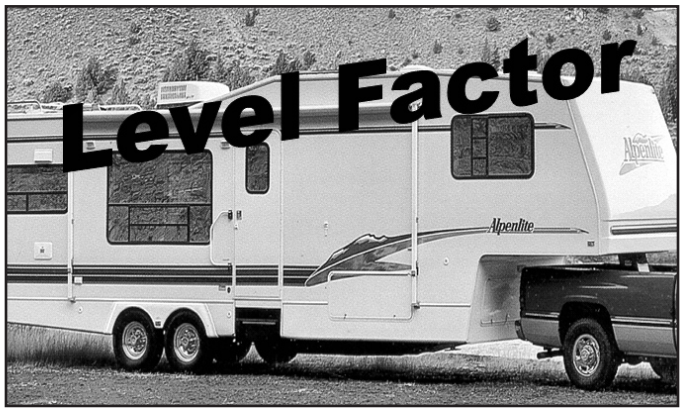

PERFECTLY LEVEL NOT REQUIRED
MORE LEVEL = BETTER COOLING

8.2 Ventilation

The installation shall be made in such a manner as to separate the combustion system from the living space of the mobile home or recreational vehicle. Openings for air supply or for venting of combustion products shall have a minimum dimension of not less than 1/4 inch. Ventilation is a critical requirement for proper cooling unit operation. The coach vent system must be able to provide a way to direct the hot air, produced by the action of the cooling unit, out away from the installation of the refrigerator. The refrigerator extracts heat from the interior of the refrigerator cabinet and dissipates the heat out through the vent system. In a proper installation there should be zero (0”) clearance surrounding the sides and top of the refrigerator to achieve proper air flow. Clearance from the back of the refer to the outside wall must be no greater than 1 inch. All potential dead air pockets should be blocked or baffled to ensure that heat won’t be trapped in these spaces and reduce efficiency.

NOTE: Refrigerators should be installed in accordance with appropriate installation instructions received with the refrigerator.

FOR MORE UPDATED INFORMATION ON UNIQUE VENTILATION REQUIREMENTS, refer to Vent Installation Instructions, Form No. 3313238.XXX.

Typical Roof Vent and Side Wall Vent

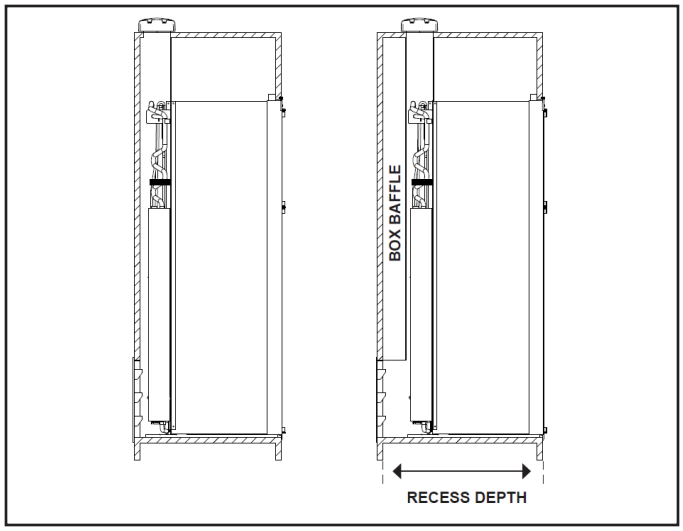

Typical Two Side Wall Vents

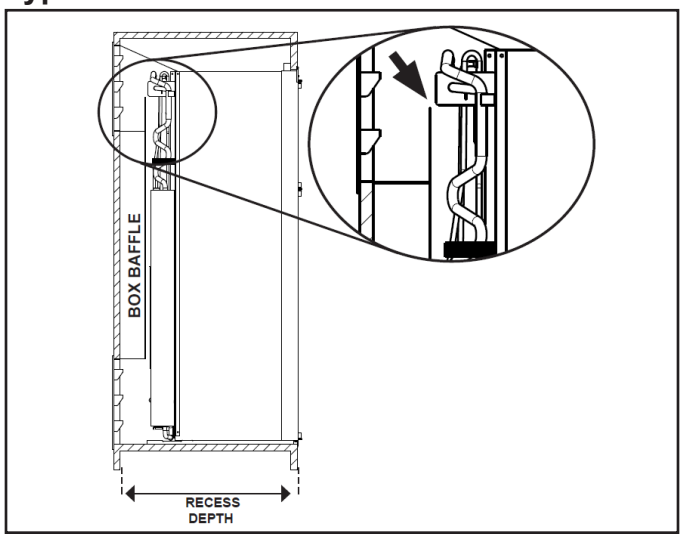

8.3 Ventilator Fans

The RM3762/RM3962 have optional ventilator fan(s) mounted to the back of the refrigerator (exterior). The purpose is to assist required air movement across the refrigerator condenser to ensure optimum performance. The fan(s) are powered from DC current and are controlled from a limit switch, mounted on the end plate to the condenser fins just above the flue. The limit switch is normally open and will close at 149° F +/- 9° F and re-open at 122° F +/- 9° F. The switch can be checked for continuity. If the fans fail to run, check all wiring, the inline 3 amp fuse and the limit switch. If these checks are good, replace the fan(s).

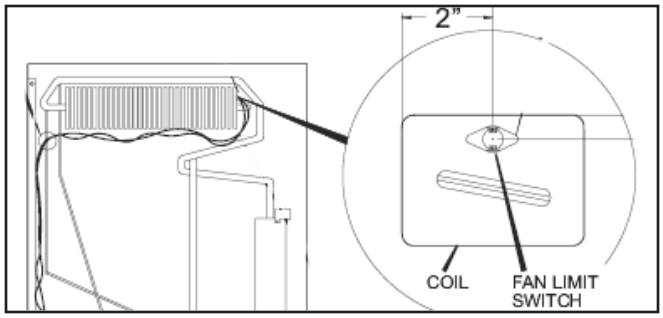

8.4 Air Leaks

Check the gasket on the doors to be sure of a positive air seal. A simple method to check gaskets is to close the door on a dollar bill, then pull the dollar bill out. If no resistance is felt, the gasket in that place is not sealing properly. This should be done on all four sides of the door in several places. If a gasket is not sealing properly, warm the gasket material with a hair dryer. Then close the door and the magnetic strip should pull the gasket to the metal frame. Leave door closed until the material has cooled. Then recheck for a positive seal. If a positive seal cannot be achieved, replace the door gasket. Also check that the cooling unit is installed properly. The cooling unit's foam block, the portion that surrounds the evaporator coils, must be flush to the cabinet at the back of the refrigerator and have a positive seal. If the cooling unit is not installed properly, remove and install properly. If the cooling unit has been changed it could be letting air in from the back-side , creating excessive frost.

NOTE: Air leaks will cause insufficient cooling as well as rapid formation of frost**.**

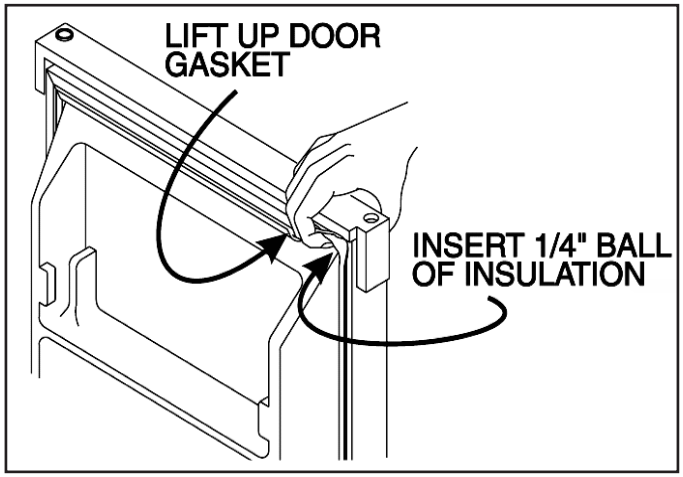

⚠ CAUTION

DO NOT OVERHEAT AS YOU CAN MELT THE MATERIAL

Another source for an air leaks could be the drain hose. When units are installed, at the end of the drain is a check valve. At install the hose might be shortened and the check valve must be moved to the end of drain hose. Any time lack of performance or excessive frost is experienced, look for the check valve at the end of hose. If the drain hose is cracked or not attached at discharge, performance of frost could be a problem.

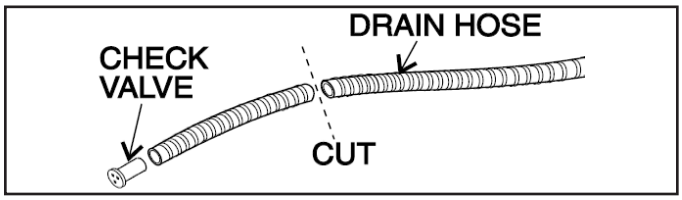

8.5 Interior Liner Seal To Frame

There is a seal that is applied to the liner in the area where the metal frame makes contact with the interior liner. If this seal is incomplete, cold air can migrate out to the metal frame. If this happens, condensation could form on the frame and could promote rapid formation of frost. If you suspect an improper seal, apply a small bead of silicone all the way around the perimeter where the frame meets the interior liner. Next remove all screws securing the refrigerator into the cabinet and slide the refrigerator out approximately 2 - 4 inches. Clean the metal frame and foil-backed insulation around the refrigerator. Apply a foil-backed adhesive tape to the joint between outer frame and foil-backed refrigerator insulation. Make sure the refrigerator is dry and that the surface temperatures are above 50° F. Use a clear silicon caulking compound and seal the seam between the refrigerator's plastic liner and the metal frame. Apply the silicon in a continuous bead around both the refrigerator freezer and food compartments.

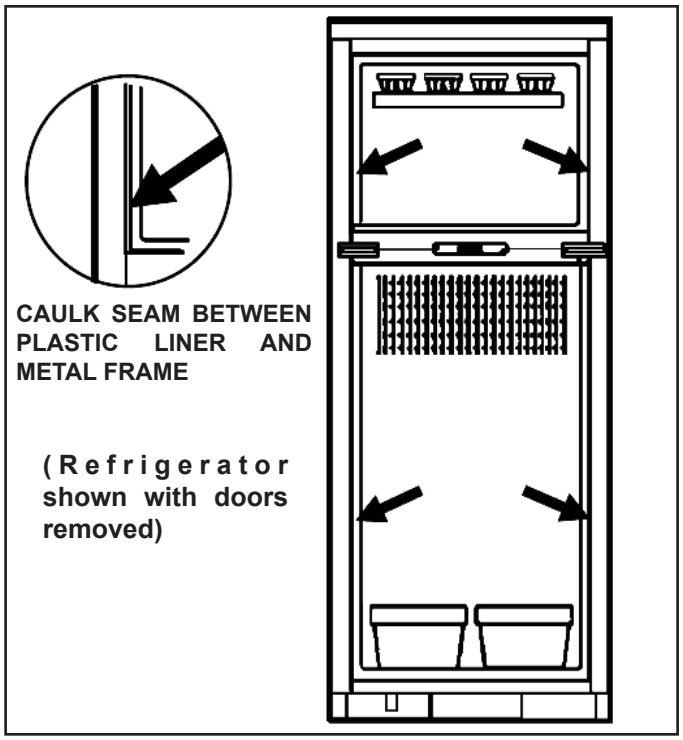

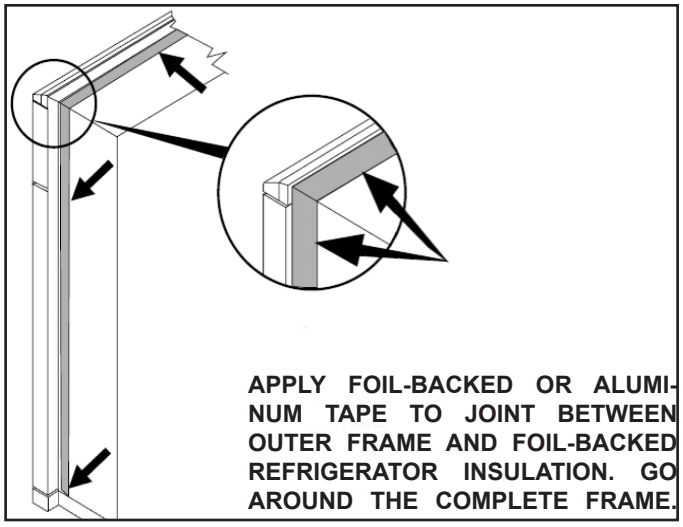

Note: To form a proper seal, it is important not to leave any gaps.

8.6 Door Position

If the upper or lower door is closing too high or low against the frame, cold air leakage can occur. Adding or deleting a flat thin washer on top of the lower or middle hinge pin can raise or lower the door position. To correct the door alignment, loosen the hinge screws slightly and reorient the door in the proper position. Hold the door in its new position and carefully retighten the hinge screws.

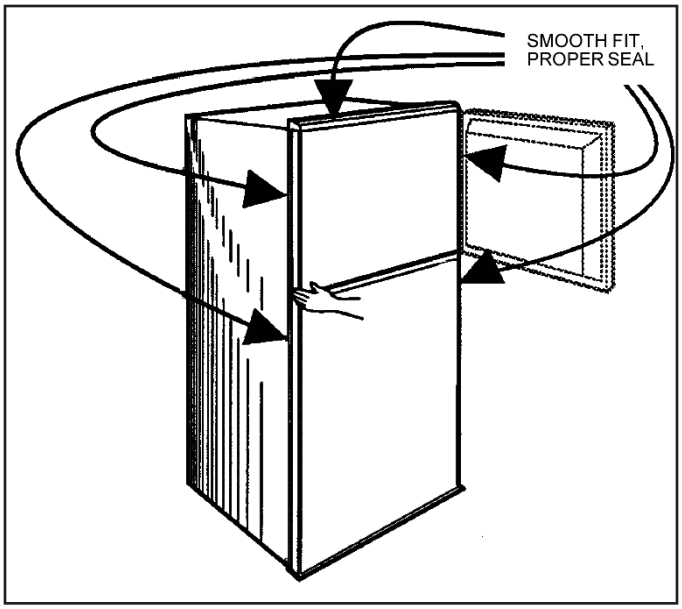

8.7 Ambient Temperature

This is the temperature surrounding the recreational vehicle, as well as the temperature of air at the back of the refrigerator. As the ambient temperature increases, the air temperature in the area of the cooling unit increases. Improper venting at this point will cause the cooling unit to have reduced efficiency. A refer that chases the out-side temperature is improperly vented or a weak cooling unit.

8.8 Cooling Unit

The cooling unit is a self-contained, hermetically sealed set of coils where the refrigeration process takes place. The chemicals involved in the cooling process include hydrogen, ammonia, water and a rust inhibiting agent. There are no repairs recommended on the cooling unit. If it is defective, replace with a new cooling unit. To check the cooling unit, first verify the AC heating element is good (Proper ohms at room temperature), proper venting and unit is level. Then place approximately one gallon of water inside the refrigerator and place a thermometer in one of the containers. **Gray incased control modules:** Unplug the thermistor from the lower control board. This will bypass the thermostat control and operate for at least 12 hours. **Flip cover control modules:** Unplug the original thermistor from the lower control board, and plug up a new thermistor and let it hang outside the lower vent. Let it operate for at least 12 hours.

Then check the temperature on the thermometer. It should be at 43 degrees or lower depending on test conditions. If so, the cooling unit is good. If the temperature of the water is above 43 degrees, replace the cooling unit. The outside temperature will affect the cooling capacity of the unit. There is that rare occasion when the cooling unit will work OK for the first 12 hours and start to warm up. If the customers complaint is “works OK for 2 to 5 days and then warms up” the unit may have an internal problem. To test this it would be necessary to operate the cooling unit for up to 24 to 48 hours in the test mode.

8.9 Food Storage

Proper refrigeration requires free air circulation within the food storage compartment. Restricted air circulation within this compartment will cause higher cabinet temperatures. To remedy this situation, simply rearrange your food. It is also essential that the shelves are not covered with paper or large storage containers. Always remember to allow for proper air circulation. Odorous or highly flavored foods should always be stored in covered dishes, plastic bags or wrapped in foil or waxed paper to prevent food odors. Vegetables, lettuce, etc., should be covered to retain their crispness.

Note: NEVER PUT HOT FOOD INTO THE REFRIGERATOR.

To reduce frost formation in and on the freezing compartment, cover stored liquids and moist foods and do not leave the door open longer than necessary. When the refrigerator is heavily loaded, it takes a longer time for refrigerator temperatures to lower, also increasing the ice making time. A very heavy load may also cause defrosting. Defrosting every 7 to 21 days would be normal, depending on the humidity level.

8.10 High Humidity

High humidity may cause a small amount of condensation to form on the frame of the refrigerator. In some cases it can develop to such a degree that it will run off the frame. As the humidity is reduced, the sweating will decrease. High humidity can also be a factor in rapid formation of frost. If this occurs the climate control heater should be tested.

The Absorption System

The continuous absorption type of cooling unit is operated by the application of a limited amount of heat furnished by gas, electricity or kerosene. No moving parts are employed.

The unit consists of four main parts—the boiler, condenser, evaporator and absorber.

The unit can be run on either electricity, kerosene or gas. When the unit operates on kerosene or gas the heat is supplied by a burner which is fitted underneath the central tube (A) and when the unit operates on electricity the heat is supplied by a heating element inserted in the pocket (B).

The unit charge consists of a quantity of ammonia, water and hydrogen at a sufficient pressure to condense ammonia at the room temperature for which the unit is designed.

When heat is supplied to the boiler system, bubbles of ammonia gas are produced which rise and carry with them quantities of weak ammonia solution through the siphon pump (C). This weak solution passes into the tube (D), while the ammonia vapor passes into the vapor pipe (E) and on to the water separator. Here any water vapor is condensed and runs back into the boiler system leaving the dry ammonia vapor to pass to the condenser.

Air circulating over the fins of the condenser removes heat from the ammonia vapor to cause it to condense to liquid ammonia in which state it flows into the evaporator.

The evaporator is supplied with hydrogen. The hydrogen passes across the surface of the ammonia and lowers the ammonia vapor pressure sufficiently to allow the liquid ammonia to evaporate. The evaporation of the ammonia extracts heat from the evaporator which in turn extracts heat from the food storage space, as described above, thereby lowering the temperature inside the refrigerator.

The mixture of ammonia and hydrogen vapor passes from the evaporator to the absorber.

Entering the upper portion of the absorber is a continuous trickle of weak ammonia solution fed by gravity from the tub (D). This weak solution, flowing down through the absorber, comes into contact with the mixed ammonia and hydrogen gases which readily absorbs the ammonia from the mixture, leaving the hydrogen free to rise through the absorber coil and to return to the evaporator.

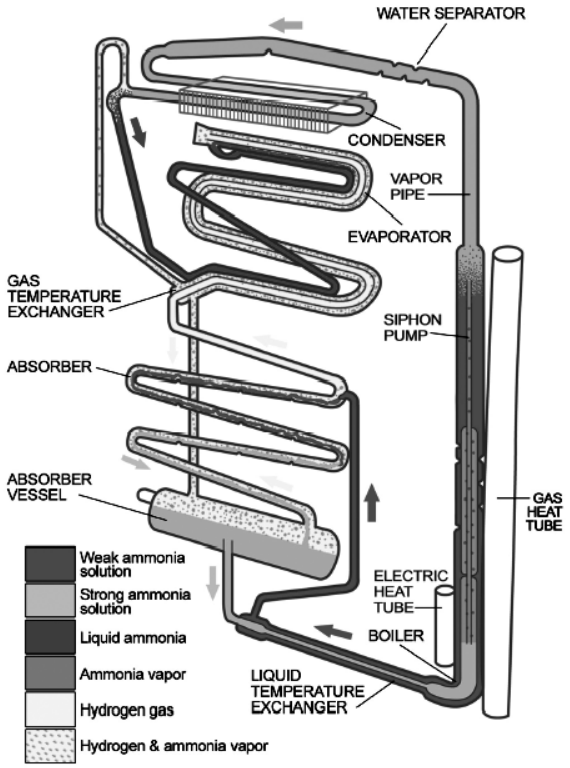

The hydrogen thus circulates continuously between the absorber and the evaporator.

The strong ammonia solution produced in the absorber flows down to the absorber vessel and then to the boiler system, thus completing the full cycle of operation.

The liquid circulation of the unit is purely gravitational.

Heat is generated in the absorber by the process of absorption. This heat must be dissipated into the surrounding air. Heat must also be dissipated from the condenser in order to cool the ammonia vapor sufficiently for it to liquefy. Free air circulation is therefore necessary over the absorber and condenser.

The whole unit operates by the heat applied to the boiler system and it is of paramount importance that this heat is kept within the necessary limits and is properly applied.

Dometic

SECTION 9 WIRING

9.1 Internal Wiring

Check all wires and the connectors to ensure a proper and tight connection. Also verify the refrigerator is wired per the wiring diagram for the model you are working on. (See applicable wiring diagrams for your model refrigerator). A loose connection can create erratic operation. Always check the wires at the DC terminal block, wires in and wires out.

9.2 External Wiring

120V AC Connection: The refrigerator is equipped with a three prong (grounded) plug for protection against shock hazards and should be plugged directly into a properly grounded three prong receptacle. DO NOT cut or remove the grounding prong from this plug.

12V DC Connection: The connection is made to the terminal block marked 12V DC. The control system is connected to a battery/converter circuit and could draw up to 3 amps at 12V DC. The refrigerator must be connected to the battery circuit with two wires of adequate capacity to avoid voltage drop. Proper polarity is crucial for refrigerator operation. Don't use the chassis for the ground circuit. A loose connection will create erratic operation on gas and AC. The wires must be a dedicated circuit. **No other electrical equipment or lighting should be connected to refrigerator circuit.**

9.3 Wiring Schematics

To view typical wiring schematics look in the Lower Circuit board testing section 5, pages 14-17. All units should have a specific schematic on the rear of that unit. To acquire the proper one always have the product number when you call or e-mail.

SECTION 10 ERROR CODES

Flip Cover Control Module

10.1 Error Codes

The codes are displayed flashing (alternating between temperature and message) on the display.

E 0

No communication between display and power modules. The control system will revert to full automatic operation selecting the best energy source available with AC, GAS priority. The temperature setting will be maintained at the mid position. The power module will continually attempt to reestablish operation of the display module. Test Cable, Upper LED display panel, Lower board, clean all grounds, and try a different DC power source. If problem still exist change lower control board.

E 1

Hardware fault in the gas operation system.
Test Upper and lower controls, Solenoid, wire harness, clean all grounds and try a different DC power source.

E 2

A failure of the temperature sensor device or associated electronic circuitry has occurred. If the connection to the temperature sensor is faulty, the cooling unit will be shut down (No cooling). Test Thermistor.

E 3

Overheating thermostat is open. Check for continuity of the thermo disc and thermo fuse, reset if tripped. Check for restrictions in venting and possible internal failure of the cooling unit.

E 4

DC Voltage is out of range. (exceeds or has dropped below operational limits approx. 8-18 VDC). Check DC voltage at lower control board.

SECTION 11 DIAGNOSTIC MODE

11.1 Diagnostic Test

To perform a diagnostic test:

1. Turn off the refrigerator. (press ON/OFF button)
2. Press and hold the TEMP. SET button and then, press the ON/OFF button.
3. Release the TEMP. SET button. Press it again to toggle the list of functions step by step.

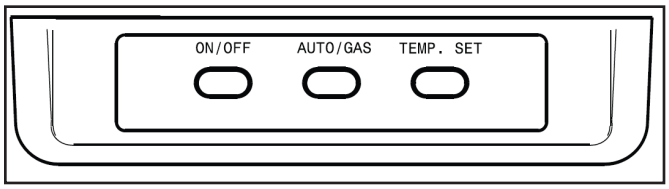

Number
Test Function
Test Indication
Test Results Indication

1	All outputs off	F	E 0 Communication Fault E 2 Temperature sensor fault
2	Turn LAC heater on	L H	E 0 Communication Fault 0 N LAC heater on Press the lamp switch. The lamp should still be on.
3	Turn AC heater on	A C	E 0 Communication Fault 0 N AC heater on " " AC heater off, AC not available
4	D+ status (if D+ is connected) Not available on all models	d Pw	E 0 Communication Fault 0 N D+ high " " D+ low
5	Run gas (one attemp only)	L P	E 0 Communication Fault E 1 Igniter & valve off, gas hardware fault 0 N Igniter & valve on F L Igniter off &valve on flame detected " " Igniter & valve off, gas problem (check gas) (If flame is not ignited within 45 seconds)

SECTION 12 ICE MAKER

12.1 Operation

The refrigerator must be allowed to pre-cool before starting the ice maker. The refrigerator has to be connected to 120 volts AC before the ice maker can operate. The water line manual shutoff valve (not part of Dometic unit) must be open. To start making ice, move the ice level bail arm to DOWN position.

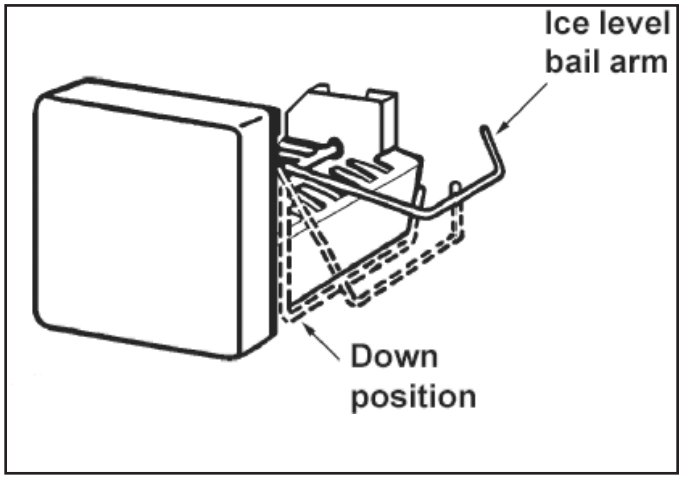

When the ice maker mold thermostat senses the preset temperature for ejection of the ice cubes, the fingers will start to rotate dumping any ice cubes and filling the mold with water. When the storage container is full of ice, the ice level bail arm cannot return to the DOWN position. This will stop further production of ice until the container is emptied and the bail arm is returned to the down position. The absorption system will keep the compartment at the proper temperature for storage of ice. Ice making is accelerated if the thermostat is set to the coldest position. It is a good idea to do this a few hours before you anticipate a need for ice. The first few cycles may have small cubes due to air trapped in the water lines. The first container of ice cubes should be dumped if the water system has been winterized or not used for several weeks.

NOTE: IF THE ICE MAKER WAS CLEANED AND DRAINED, NO ICE CUBES WILL BE DUMPED INTO THE STORAGE CONTAINER DURING THE FIRST FEW CYCLES.

12.2 Mold Heater

The mold heater uses 165 watts to thaw the ice free from the mold. It is wired in series with the thermostat which also acts as a safety device. With power to the appliance off, check for resistance between the two leads to the heater element. You should obtain a reading of approximately 80 ohms +/- 10%. If the heater is found to be defective, the manufacturer recommends replacement of the entire ice making unit for proper operation.

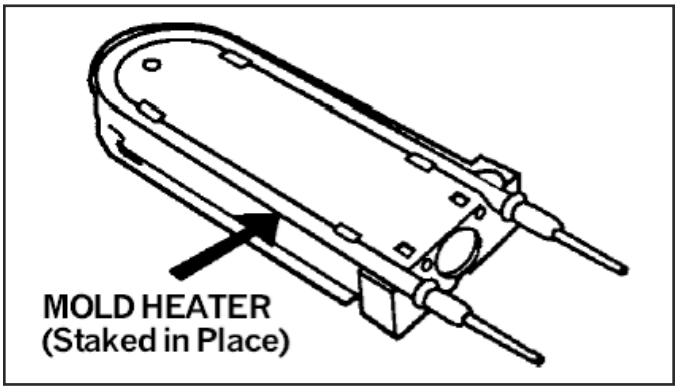

12.3 Ice Ejector

The ice ejector blades sweep the ice from the mold cavities during the ejection cycle. The drive end of the ejector is “D” shaped for positive coupling. The bearings at both ends are lubricated with silicone grease. If the ejector blades are frozen into the ice, defrost the ice maker and manually cycle the ice making unit, making sure the ejector stops at the right location.

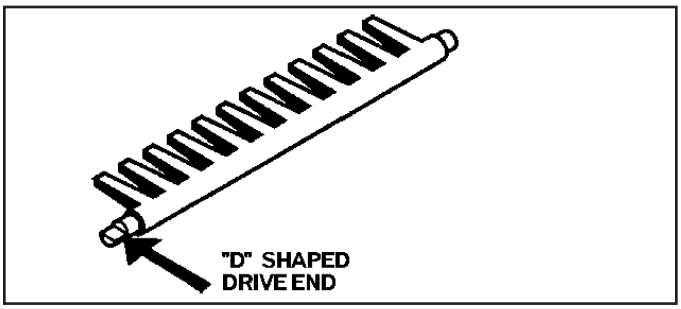

12.4 Mold Thermostat

This is a single-pole, single-throw, bimetal switch. It starts an ejection cycle by closing at 15º F ± 5º. The reset temperature is 50º F ± 5º. The thermostat is in series with the mold heater and acts as a safety against overheating in case of a mechanical failure. If the thermostat is defective, replace it. The mold thermostat starts the ice ejection cycle. The freezer must be down to proper temperature for the mold thermostat to stare the cycle. The cycle can be started by turning the large gear clock wise 1/8 to 1/4 of a turn.

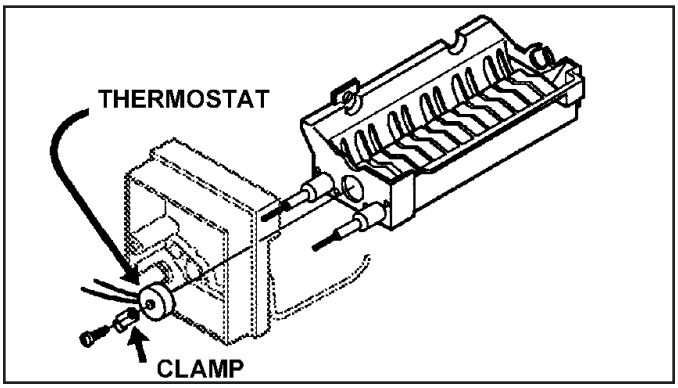

12.5 Shut Off Arm

The shutoff arm is cam driven. It operates a switch to control the quantity of ice produced. During the ejection cycle the arm is raised and lowered during each of the two revolutions of the timing cam. If the shutoff arm comes to rest on top of the ice in the storage bin during either revolution, the switch will remain open and stop the ice maker at the end of that revolution. The arm has a manual shutoff built into the linkage; by raising the arm as high as possible, it will lock in that position until forced down. If the arm and switch do not operate properly, check for damage and repair or replace parts as necessary.

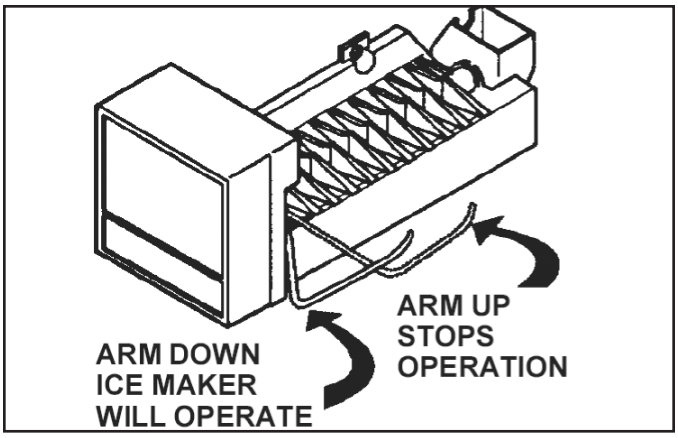

12.6 Mold Switches

The three switches are single-pole, double-throw style. They are identical and interchangeable. The holding switch assures completion of a revolution once a cycle has started. The water valve switch opens the water valve during the fill stage of the cycle. NOTE: This is the only adjustable component of the ice maker. If you use a double throw switch, DO NOT use the N.O. terminal. The shutoff switch stops the ice maker's operation when the storage bin is full.

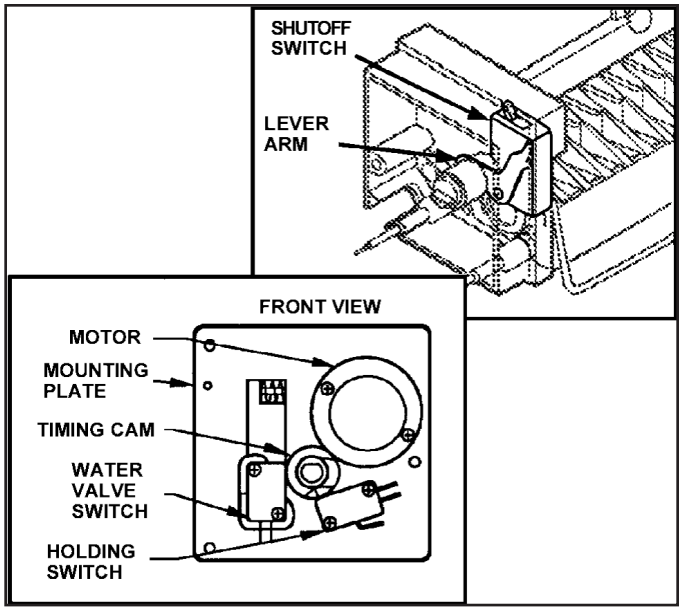

12.7 Timing Motor

This is a low-wattage, stall-type motor which is geared to the timing cam and ice ejector. It is a one RPM motor. To check the motor, disconnect power to the appliance and test for continuity between the two leads. If you DO NOT have continuity, replace the motor. If you have continuity and the motor runs, DO NOT replace.

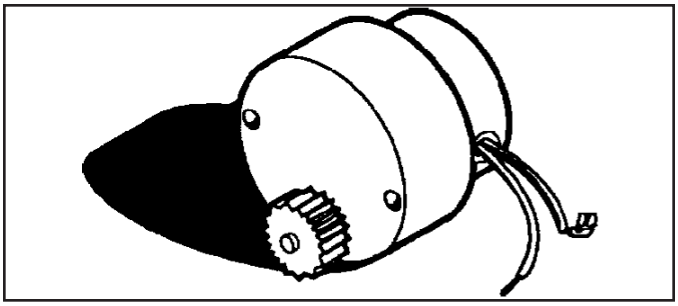

12.8 Water Valve

This valve is solenoid operated. When it is open, it releases water from the source to the mold. The amount of water is proportional to the length of time the water valve switch is held closed by its timing cam. Disconnect power to the appliance, remove the wires to the water valve solenoid coil, and check for continuity between the two terminals. The ohms should be between 200 to 500. If you have continuity, the solenoid is good. It takes 10-15 watts to energize the solenoid coil. The mold heater and coil are in series. When the mold heater is activated, this causes the voltage to drop to about 105 VAC at the coil. The valve has a flow washer inside which acts as a pressure regulator. A strainer is installed to prevent dirt, rust, etc, from entering the valve. Check for any debris which might obstruct the flow of water, or prevent the valve from closing completely when the circuit is not energized. Remove any obstructions. If the valve still fails to operate properly, replace it. If the valve has been cracked from freezing this would not be a warranty item.

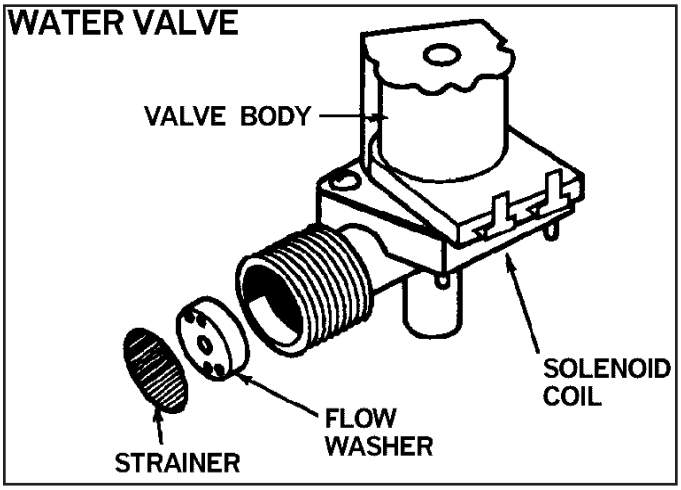

12.9 Ice Maker Replacement

⚠ WARNING

This is an energized circuit. Shock can occur if not tested properly. Testing is to be done by a qualified service technician.

It may be necessary to replace the entire ice maker assembly. Disconnect power to the appliance. Disconnect the 4 pin connector from the ice maker unit. Check each wire for continuity to make sure the wiring is good before replacing the ice maker unit. If there is no continuity on any of these wires, replace or repair them as necessary and recheck the ice maker unit to determine whether the problem was in the wiring or the unit itself. Remove the three screws holding the unit to the plate. Before replacing the ice maker assembly check the temperature in the freezer. For the unit to cycle it should be 12 degrees or cooler as the mold thermostat starts the cycle.

12.10 Water Fill Adjustment

The correct water level in the mold is important for the proper production of ice. The size of the ice cubes depends on the amount of water which enters the mold. The cubes should be approximately 1/2" wide, 3/4" high and 2-1/2" long. If the water overflows in the mold, first check to see if the ice maker unit is level in the appliance. Next ensure that the appliance is installed level in the RV. If there is still water overflow, adjustment of the water fill screw is necessary. Locate the screw on the ice maker assembly. Turn the screw as necessary toward the "+" or "—" side. One full turn of the screw will make an 18 cc change in the amount of water. DO NOT turn the screw more than one full turn at a time. If the water level is too high, it can also cause the ejector blades to become frozen in the ice. Follow the procedures above to correct the problem.

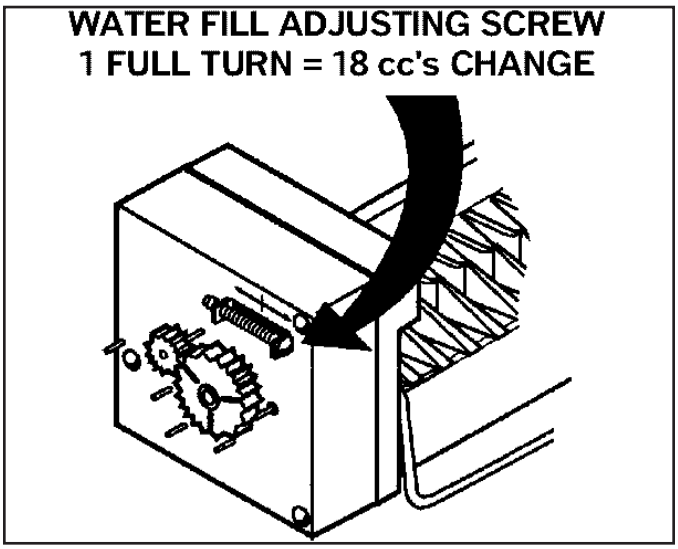

12.11 Water Supply

To operate properly, the water pressure in the water supply line must be between 15 and 50 PSI. Lower water pressure, water turned off, or obstructions or air in the water line can cause low or no ice production. First check to see that the water supply is fully turned on. Visually check the line for kinks, etc. which might obstruct the flow of water. To remove trapped air, loosen the connection at the water solenoid valve of the appliance. Ensure that pressurized water is reaching this point, and bleed off any air in the line. Retighten the connection, making sure there are no leaks.

12.12 Wiring

⚠ WARNING

This is an energized circuit. Shock can occur if not tested properly. Testing is to be done by a qualified service technician.

Refer to the wiring diagram supplied with the unit you are working on, and make sure all wiring connections are correct and tight. There are 4 wires coming from the ice maker.
BLACK: Connected to incoming hot from AC power source. This could be split wire at the AC BLACK at the circuit board or on a separate power cord.
WHITE: Connected to either side of the water valve and will split at the valve and hook-up to the incoming **WHITE** from the power source or separate cord.
GREEN/YELLOW: Connected to chassis ground.
BROWN: Connected to either side of water valve.

A — CIRCUIT BOARD POWER
B ICEMAKER
C — WATER VALVE
D HEATING CABLE
E — THERMOSTAT
F CHASSIS GROUND
G — PROTECTIVE EARTH

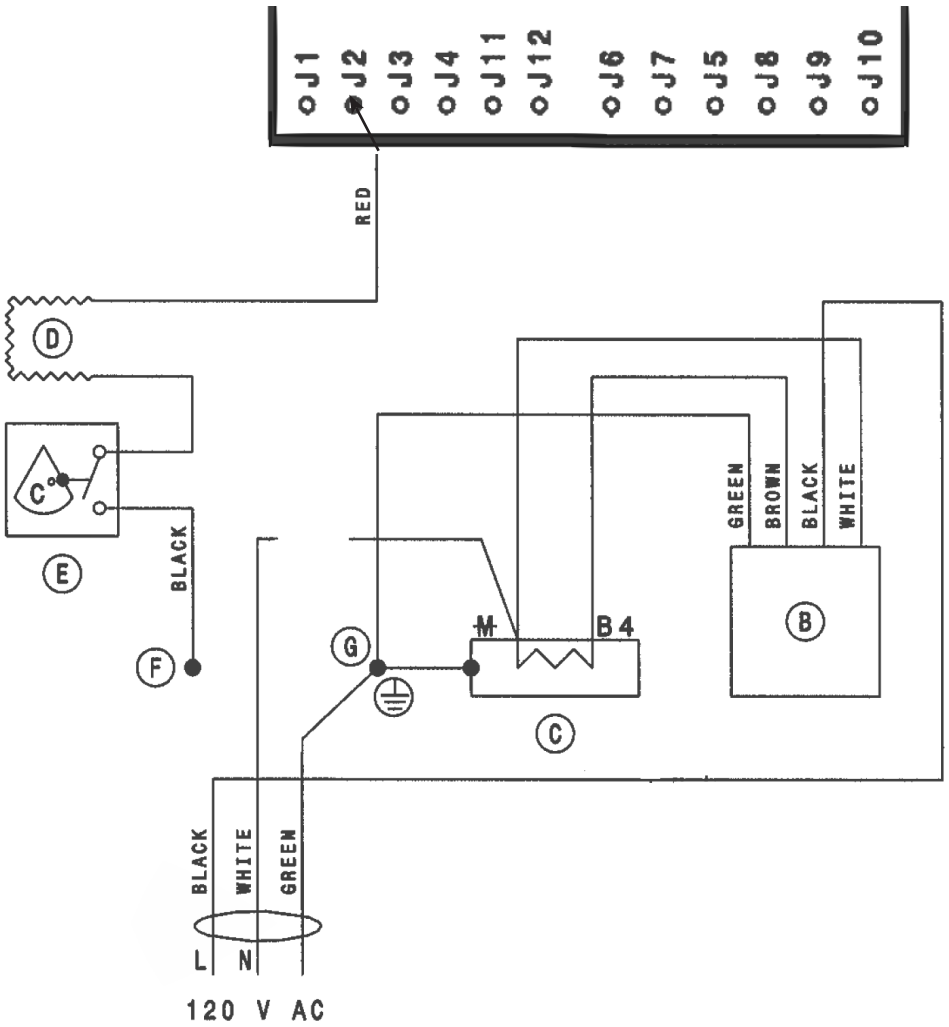

IN OPERATION THE ICE-MAKER WILL ADD 1.4 AMPS TO THE TOTAL REFRIGERATOR DRAW

ICE MAKER TYPICAL WIRING DIAGRAM

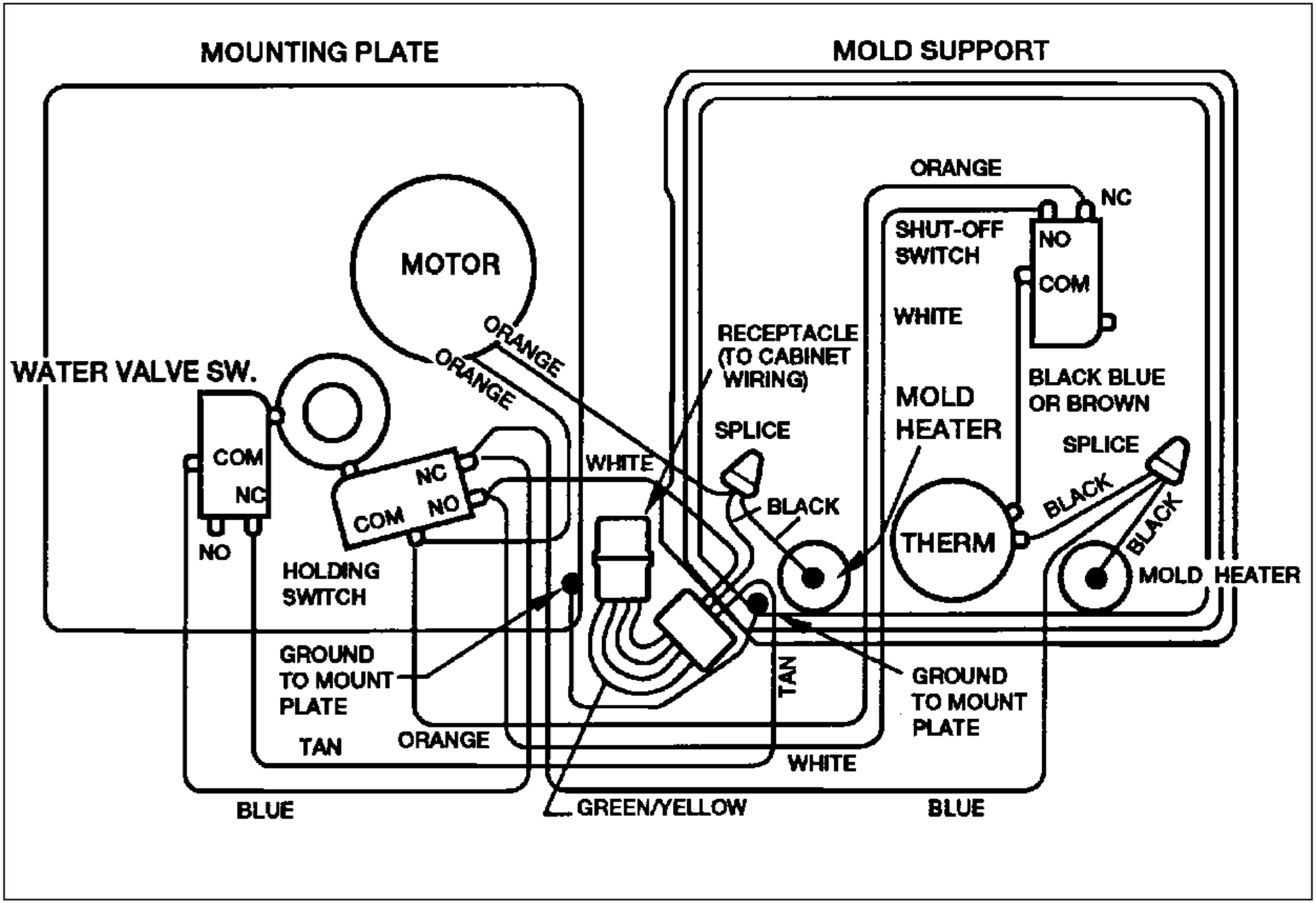

NOTE THE RELATIVE POSITION OF THESE COMPONENTS IN THE FOLLOWING SCHEMATICS

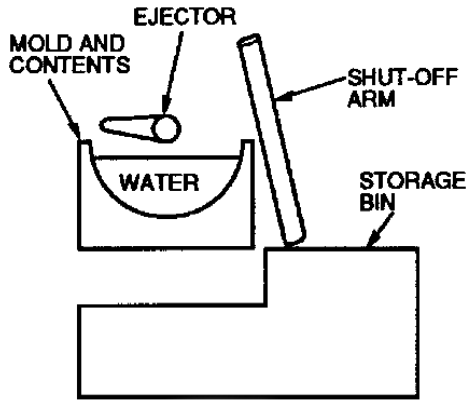

1

NON ENERGIZED CIRCUIT
ENERGIZED CIRCUIT

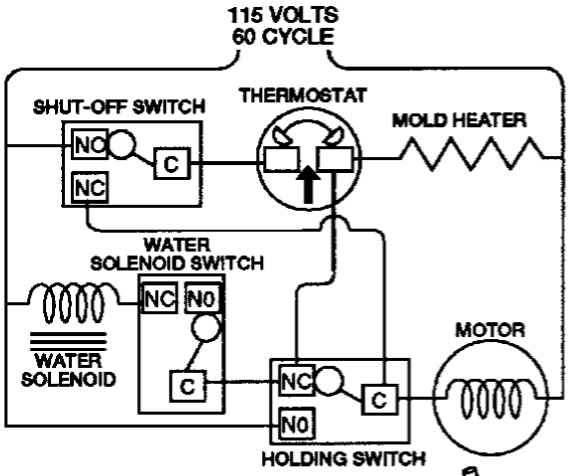

2

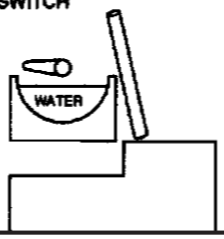

This is a freeze cycle. The mold is filled with water. The thermostat is open. All components are de-energized.

3

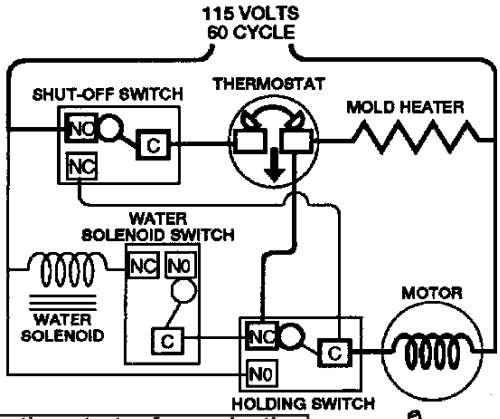

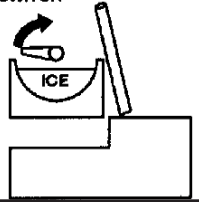

This is the start of an ejection cycle. The thermostat switches to its closed position after being sufficiently cooled by the ice in the mold. The mold heater and motor are now energized. The ejector blades begin to turn.

4

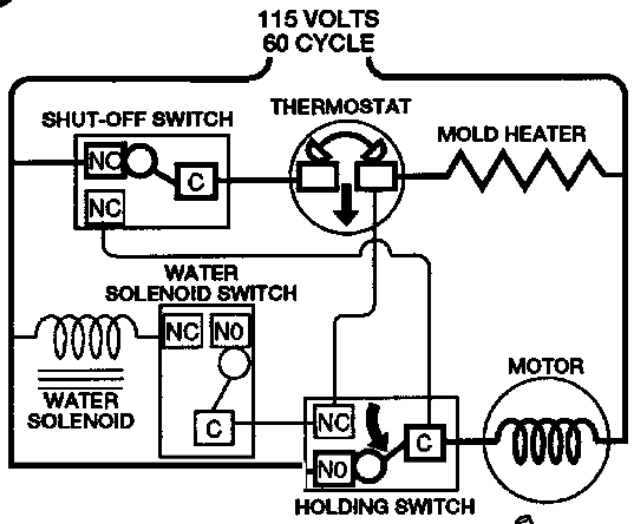

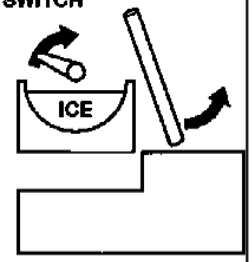

After a few degrees of motor rotation, the timing cam switches the holding switch to its normally open position; this assures completion of the cycle. The mold heater remains energized through the thermostat circuit. During the first half of the cycle, the shut-off arm is raised and lowered by the timing cam and operates the shut-off switch.

5

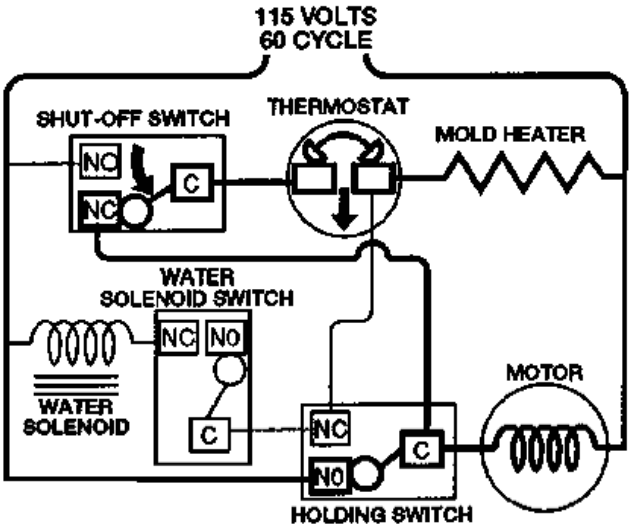

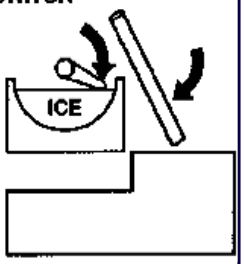

When the ejector blades reach the ice in the mold, the motor will stall. It will remain in this position until the ice has thawed loose. During this time the mold heater remains energized.

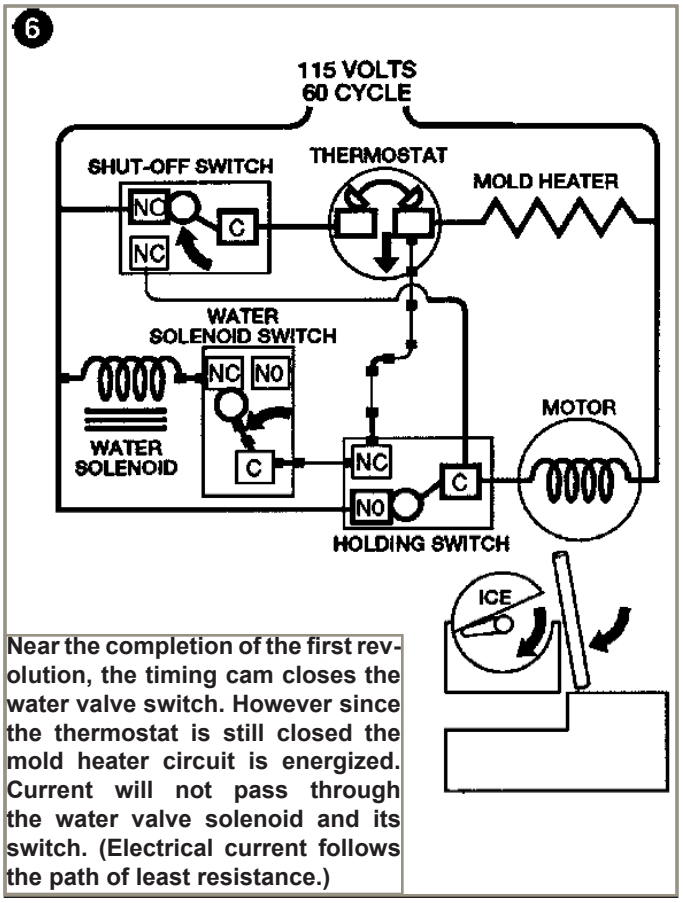

Near the completion of the first revolution, the timing cam closes the water valve switch. However since the thermostat is still closed the mold heater circuit is energized. Current will not pass through the water valve solenoid and its switch. (Electrical current follows the path of least resistance.)

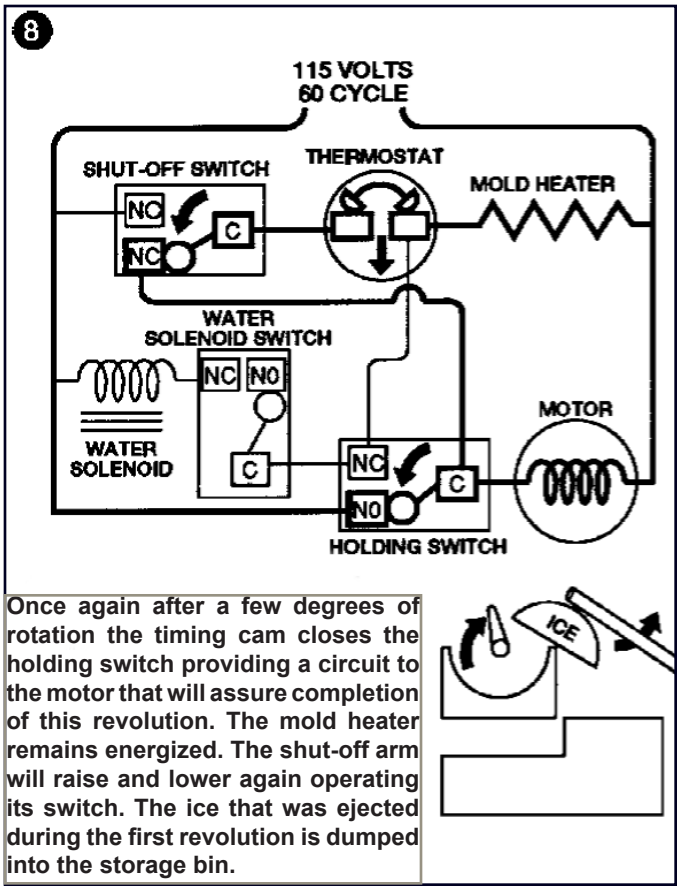

Once again after a few degrees of rotation the timing cam closes the holding switch providing a circuit to the motor that will assure completion of this revolution. The mold heater remains energized. The shut-off arm will raise and lower again operating its switch. The ice that was ejected during the first revolution is dumped into the storage bin.

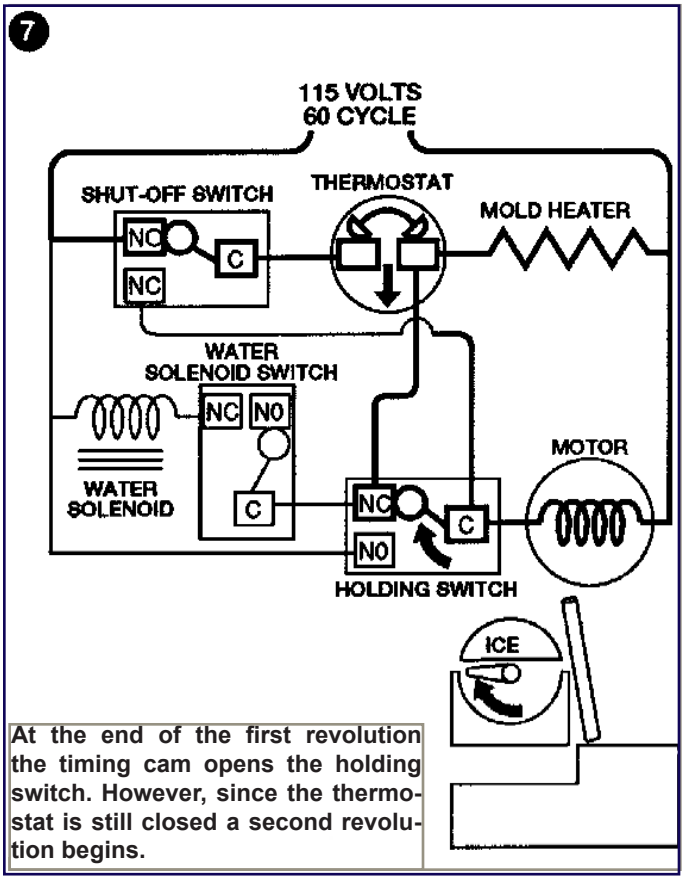

At the end of the first revolution the timing cam opens the holding switch. However, since the thermostat is still closed a second revolution begins.

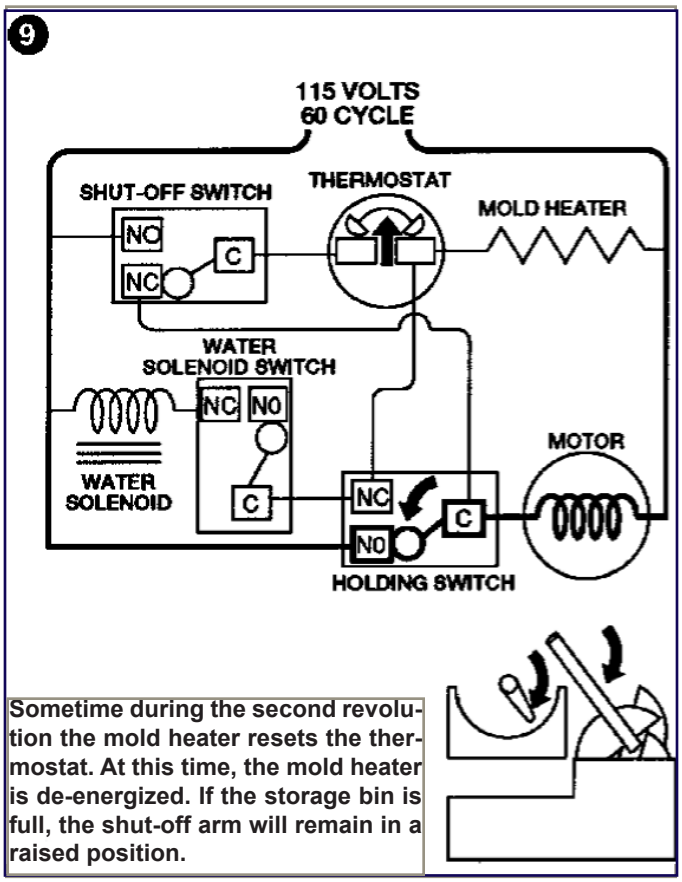

Sometime during the second revolution the mold heater resets the thermostat. At this time, the mold heater is de-energized. If the storage bin is full, the shut-off arm will remain in a raised position.

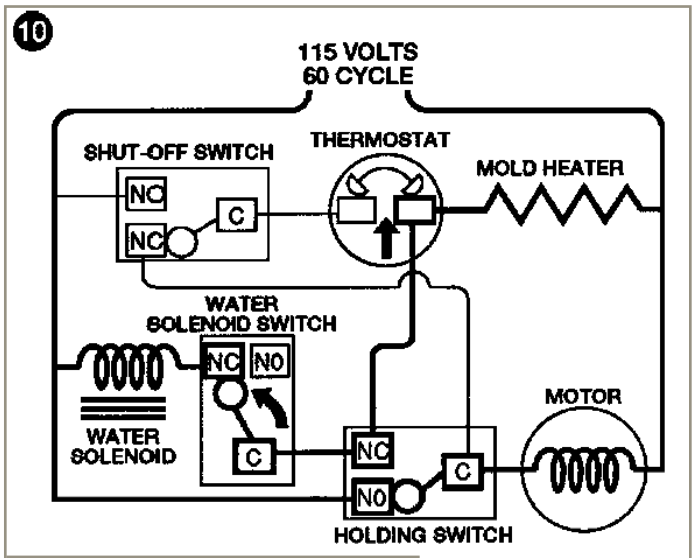

Near the completion of the second revolution the timing cam again closes the water valve switch. This time a circuit is completed through the water valve solenoid, its switch and mold heater. The water valve solenoid received about 105 volts. The remaining 10 volts to the mold heater are not noticeable. When the water valve solenoid is energized, the valve opens and water refills the mold.

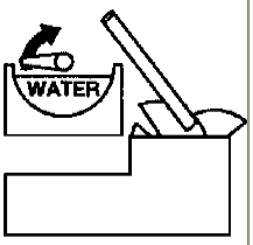

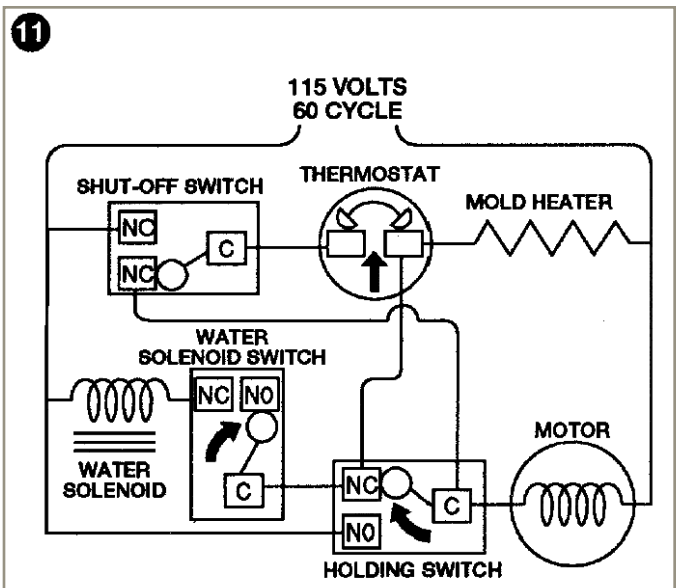

The ejection cycle ends the moment that the holding switch is closed by the timing cam. The water valve switch is also opened. If the storage bin is full, as shown here, additional cycles will not start until sufficient ice is used to lower the shut-off arm, thus operating its switch.

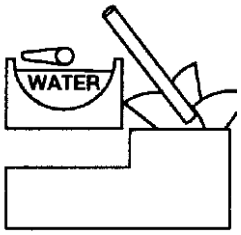

⚠ WARNING

DO NOT use a flame to check for gas leaks.