Dometic®

PARTS LIST
RM1350

USA
SERVICE OFFICE
Dometic Corporation
2320 Industrial Parkway
Elkhart, IN 46516
574-294=2511

CANADA
Dometic Corporation
46 Zatonske Unit 3
Brantford, ON N3T 5L8
CANADA
519-720-9578

For Service Center Assistance Call:
800-544-4881

Product NO	Model	Voltage	Refrigerator Frame Color	Door Style	Door Trim Color	Market	Brand
921148317	RM1350	120 V	Black	Standard	Black	USA/Canada	Dometic

PARTS LIST

MODEL RM1350

Form No. 3311888.000 7/07
©2007 Dometic Corporation
LaGrange, IN 46761

SPECIFICATIONS

Product number*	921148317
Energy Source**	
Watts	420
Ohms	34.3
Amperage	3.5
BTU's Gas Burner	2080
Jet Size	#76
Flue Baffle	
Size	6" x 15/16"
Position Above Burner	1-1/4"
Ice Bucker	1
Crispers	3
Bottle Holders	2
Climate Control Heater, Light Flap, and Fan	
Watts	36
Ohms	4
Amperage	3

* Product number located on refrigerator data plate.
** 12volt DC power is required to operate the refrigerator controls on all models

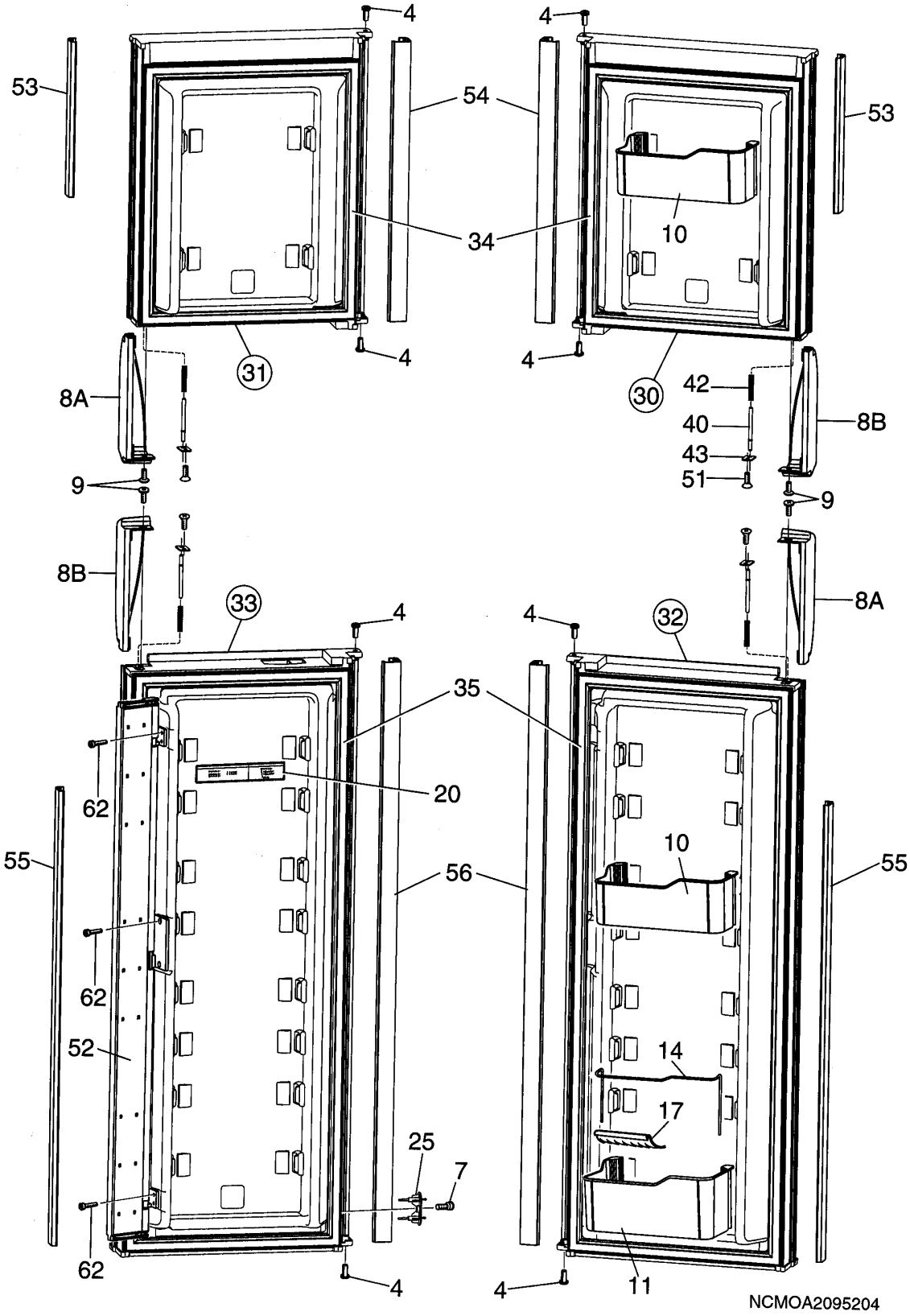
4
4
53
54
53
34
10
31
4
4
30
42
8A
40
8B
43
51
9
9
8B
8A
33
4
4
32
35
62
20
55
10
55
56
62
52
14
17
25
7
62
4
4
11
NCMOA2095204

INDEX	PART NO	MODEL	DESCRIPTION
4	2931171066	A	Hinge black
7	3858002102	A	Screw RXS B4X9.5
8A	3851057020	A	Handle
8B	3851057012	A	Hancle
9	3858089018	A	Screw, ELM 5X10 black
10	3850973011	A	Shelf, door clear
11	3851052013	A	Shelf, door clear
14	3850976022	A	Rack
17	2932658046	A	Bottle holder, white
20	3851235006	A	Decal
25	3851214019	A	Contact pin
30	3851058010	A	Freezer door right
31	3851058028	A	Freezer door left
32	3851129019	A	Refr door right
33	3851129035	A	Refr door left
34	3851228027	A	Door gasket freezer
35	3851228019	A	Door gasket refr
40	3851092019	A	Lock bar
42	3850497011	A	Spring
43	3850496013	A	Plate
51	3858071024	A	Screw, EPT 40X14 black
52	3851104038	A	Flap
53	3851056014	A	Profile, Side, Freezer
54	3850982079	A	Profile, side, Freezer
55	3851056022	A	Profile, Side, Refr
56	3850982087	A	Profile, Side, Refr
62	3858002268	A	Screw, RXS B8X19

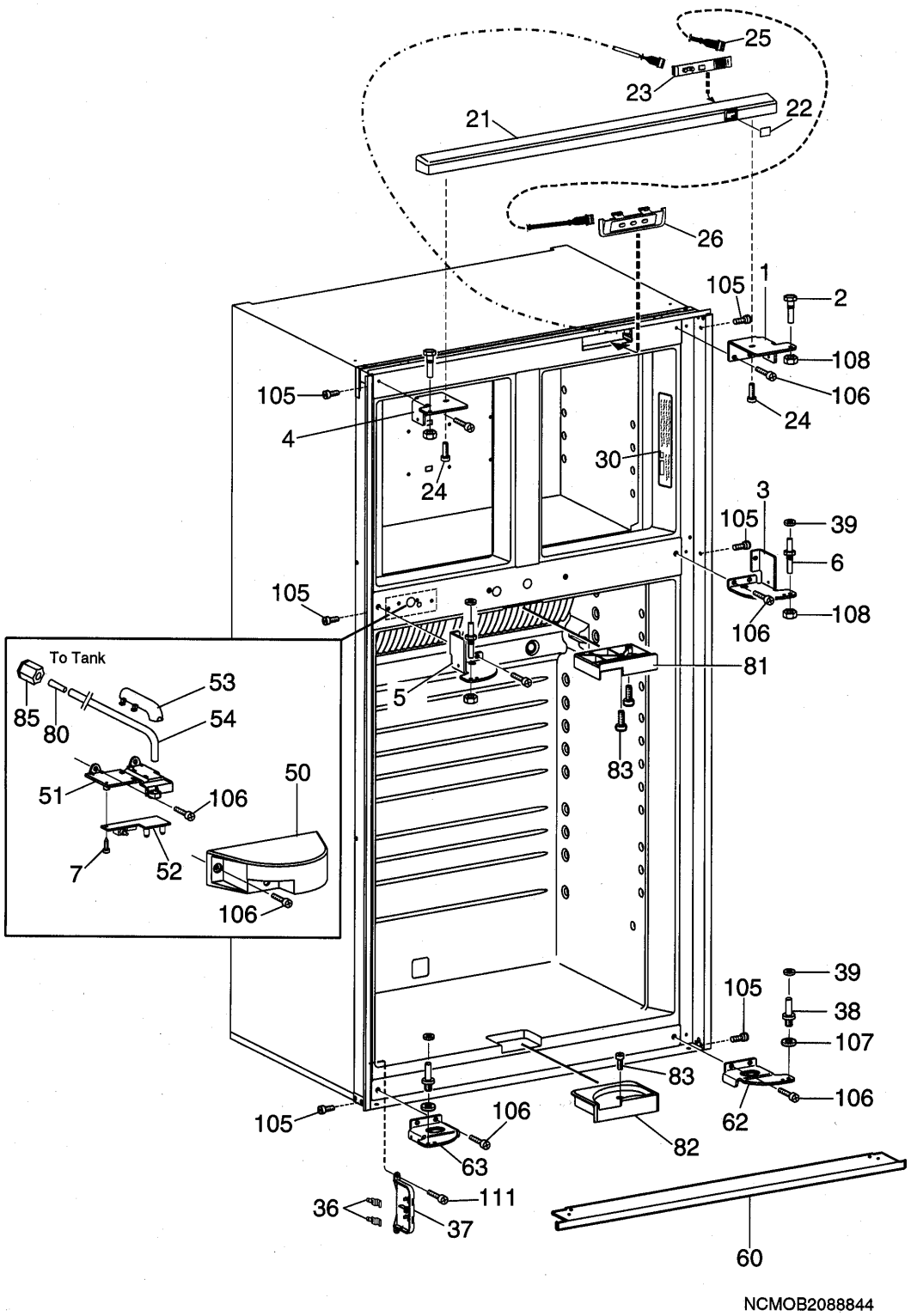
25
23
21
22
26
105
1
2
108
106
24
105
4
24
30
3
105
39
6
105
108
106
81
To Tank
53
85
80
54
5
83
51
106
50
7
52
106
39
105
38
107
83
106
105
106
62
82
63
111
36
37
60
NCMOB2088844

INDEX	PART NO	MODEL	DESCRIPTION
1	3850989025	A	Hinge, Black
2	2932647015	A	Hinge Pin, Upper
3	3851187025	A	Hinge, Black
4	3850989017	A	Hinge, Black
5	3851187017	A	Hinge, Black
6	2932648021	A	Hinge Pin, Black
7	3858002102	A	Screw, RXS B4x9.5
21	3851072011	A	Front, Black
22	3850970017	A	Lens
23	3850969019	A	Board, Control
24	3858006012	A	Screw, PT PH4X10
25	2954568016	A	Harness
26	3850964010	A	Control Panel, Complete
30	3851035000	A	Decal
36	3851212013	A	Contact Plate
37	3851211015	A	Holder
38	2932649029	A	Hinge Pin
39	3858010022	A	Washer
50	3851066013	A	Cover
51	3851067011	A	Holder
52	3851144018	A	Control PCB
53	3851068019	A	Holder, Hose
54	3851127039	A	Hose
60	2932664093	A	Base Cover Black
62	3851197024	A	Hinge, Lower, Black
63	3851197016	A	Hinge, Lower, Black
80	3108708.185	A	Insert, Inlet
81	3851102016	A	Guiding Device Upper
82	3851103014	A	Guiding Device Lower
83	3858002300	A	Screw, RXS 4.25X25
85	3851117014	A	Nut, 1/2”
105	3858004041	A	Screw MRX 4X6FZ
106	3858039104	A	Screw, MRX-RR M4X10, Bblack
107	3858010113	A	Washer, BRB 6.4X12.5
108	3858009057	A	Nut, Black
111	3858002201	A	Screw, RXS B8X9.5

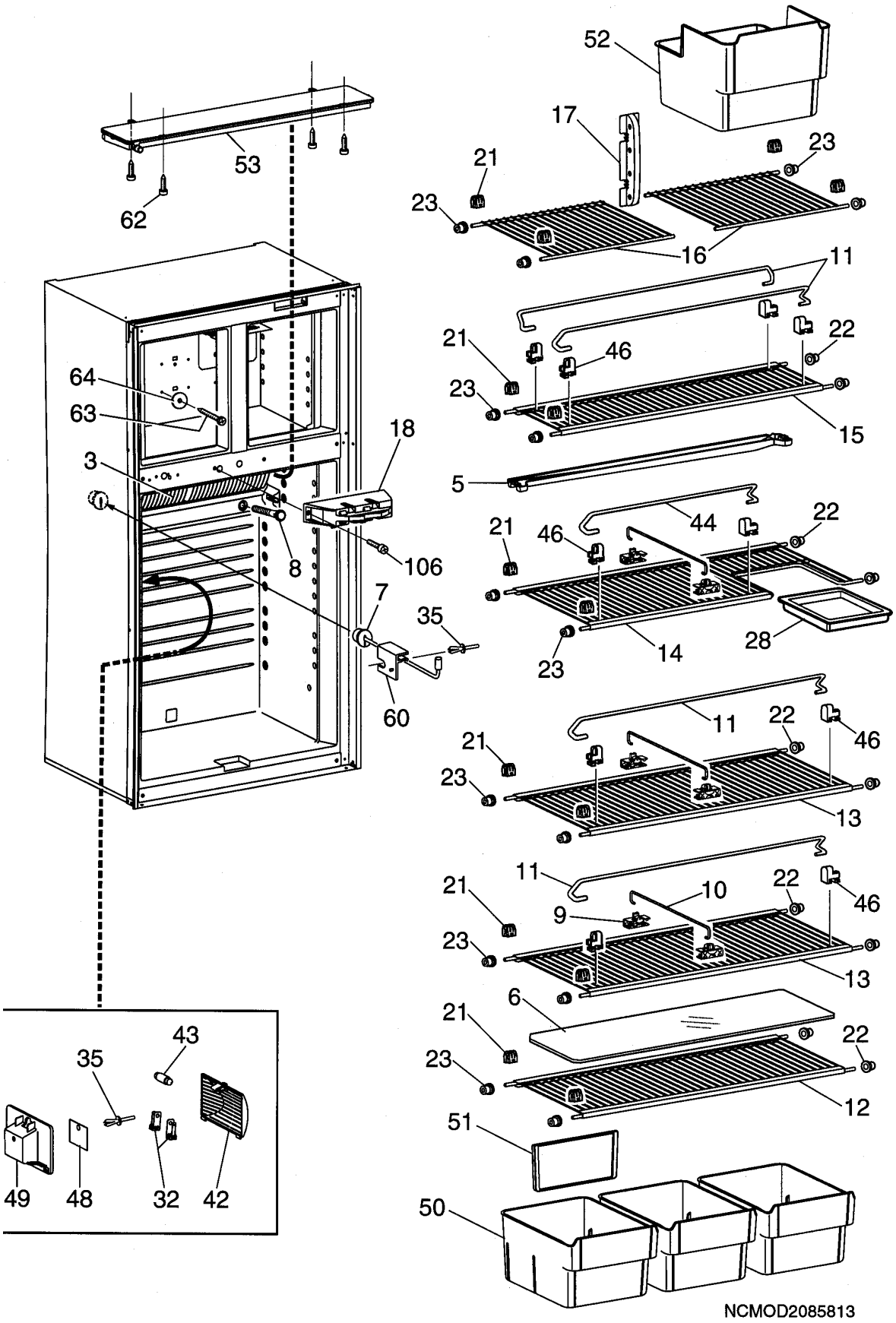
52
17
21
23
23
16
11
21
46
22
23
15
5
44
21
46
22
14
28
23
11
22
46
21
23
13
11
10
22
46
21
9
23
13
6
21
22
23
12
51
50
53
62
64
63
18
3
8
106
7
35
60
43
35
49
48
32
42
NCMOD2085813

INDEX	PART NO	MODEL	DESCRIPTION
3	3851166011	A	Cooling Flange
5	3851050017	A	Drip tray, clear
6	2931117226	A	Shelf, Plastic
7	2002301006	A	Cover
8	3851229017	A	Drain, Pipe
9	3851208011	A	Golder,Sliding
10	3851209019	A	Rack
11	2007337252	A	Rack
12	3851236012	A	Shelf, Wire
13	3851236020	A	Shelf, Wire
14	3851237010	A	Shelf, Wire
15	3851236038	A	Shelf, Wire
16	3851023014	A	Shelf, Wire
17	3851153019	A	Shelf Support, Rear
18	3851075014	A	Door Latch
21	2932102011	A	Shelf Support
22	2932101013	A	Plug
23	2932103019	A	Plug
28	2932636018	A	Box
32	2932108018	A	Contact Pin
35	0165521030	A	Rivet
42	3850962014	A	Lamp Glass
43	2007290006	A	Lamp 10W 12VDC
44	2007337179	A	Rack
46	2930693045	A	Holder
48	3850963012	A	Reflector
49	3850961016	A	Lamp Housing
50	3851089015	A	Crisper, Clear
51	3851090013	A	Divider
52	3851118012	A	Ice Container
53	3851069017	A	Water Tank
60	3850679014	A	Bracket Thermistor
62	3858002268	A	Screw, RXS B8x19
63	3858036027	A	Screw, KFXS 4.8X55
64	3858010147	A	Washer
106	3858039104	A	ScrewMRX-TT M4X10 Black

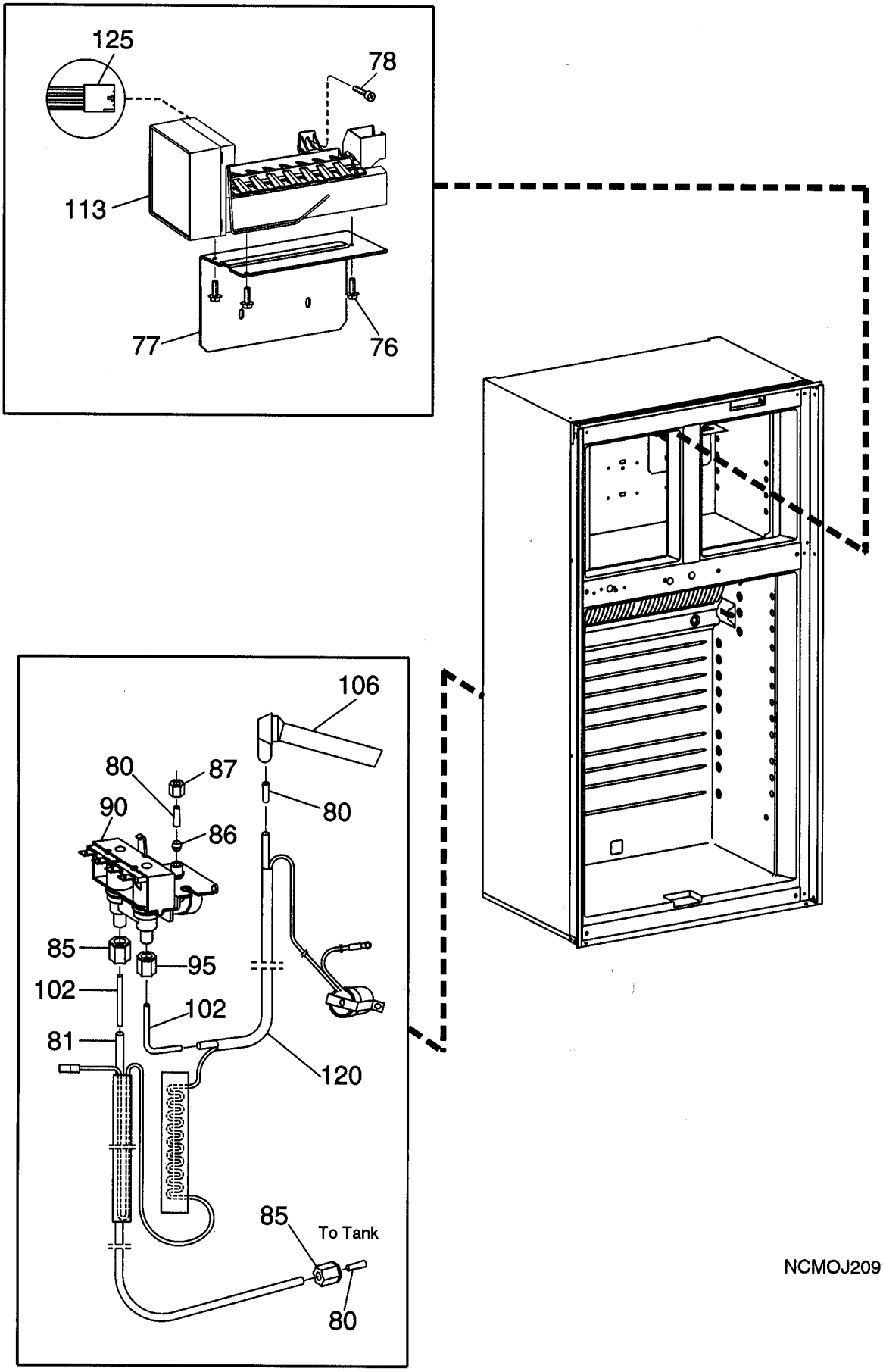
125
78
113
77
76
106
80
87
90
80
86
85
95
102
102
81
120
85
To Tank
80
NCMOJ2091373

INDEX	PART NO	MODEL	DESCRIPTION
76	3108709.027	A	Screw
77	3851142012	A	Shelf, Ice Maker
78	3858004181	A	Screw, MRX M4x16
80	3108708.185	A	Insert, Inlet
81	3851127021	A	Hose, Water Valve
85	3851117014	A	Nit, 1/2”
86	3108706.296	A	Ferrule, Inlet
87	3108706.288	A	Nut, Inlet
90	3851116024	A	Valve, Water, 2 way
95	2930839010	A	Nut. /16”
102	3850220017	A	Insert, Water Inlet Valve
106	3851203012	A	Filling Tube
113	3108705.553	A	Ice Maker
120	3850688049	A	Kit, Heater, Water Inlet Valve
125	2954578015	A	Harness, Ice Maker

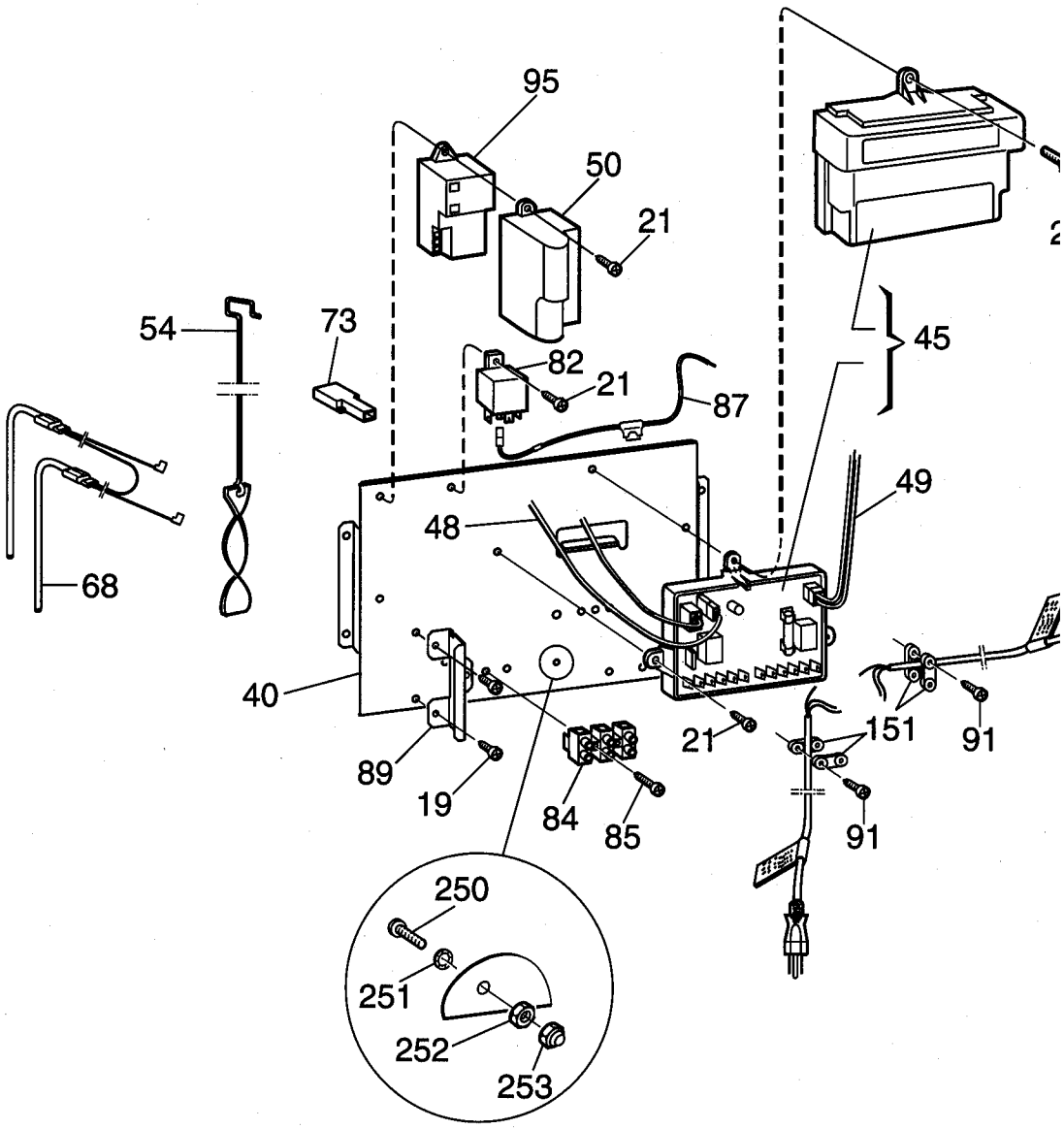

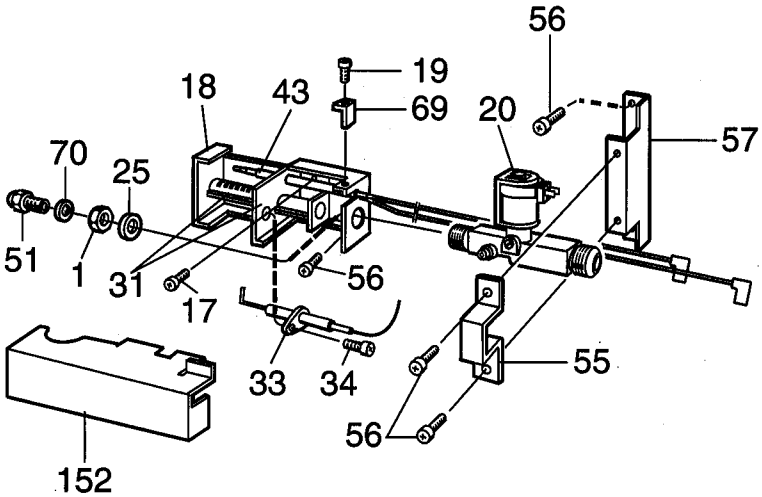

NCMOH208581

INDEX	PART NO	MODEL	DESCRIPTION
1	0140207044	A	Nut
17	3858039039	A	Screw, MRX M4x8
18	2932161017	A	Burner Housing
19	3858002144	A	Screw, RXS B6x9.5
20	2932615020	A	Solenoid Valve
21	3858002151	A	Screw, RXS B6x13
25	3858010071	A	Washer, 12.5x18.5x1
31	0955001672	A	Burner Pipe
33	2932781046	A	Electrode
34	3858002052	A	Screw, RXS B6x6.5
40	3851198014	A	Bracket
43	2931826032	A	Thermocouple
45	3851005029	A	Power Module
48	3851059042	A	Conductor, Thermistor
49	2954539058	A	Conductor, Solenoid
50	2931886010	A	Cover
51	2007419332	A	Jet #76
54	2932667054	A	Flame Spreader
55	2932662014	A	Bracket
56	3858039047	A	Screw, MRX N4x10
57	2932043017	A	Support Plate
68	3850644539	A	Heater, 120 VAC, 420W
69	2930660010	A	Fixing Bracket
70	2007457001	A	Washer
73	2931963017	A	Connector ”Y”
82	2930385006	A	Relay
84	3858022027	A	Terminal Block
85	3858002185	A	Screw, RXS B6x25
87	2954553034	A	Wire, W/Fuse
89	3851199012	A	Bracket, Water Valve
91	3858002177	A	Screw, RXS B6x19
95	2931132019	A	Spark Generator
151	0561014010	A	Cable Clamp
152	2931401018	A	Cover
250	3858004033	A	Screw, MRX M4x16
251	3858011012	A	Lock Washer
252	3858009016	A	Nut, Hex
253	3858028024	A	Lock Nut

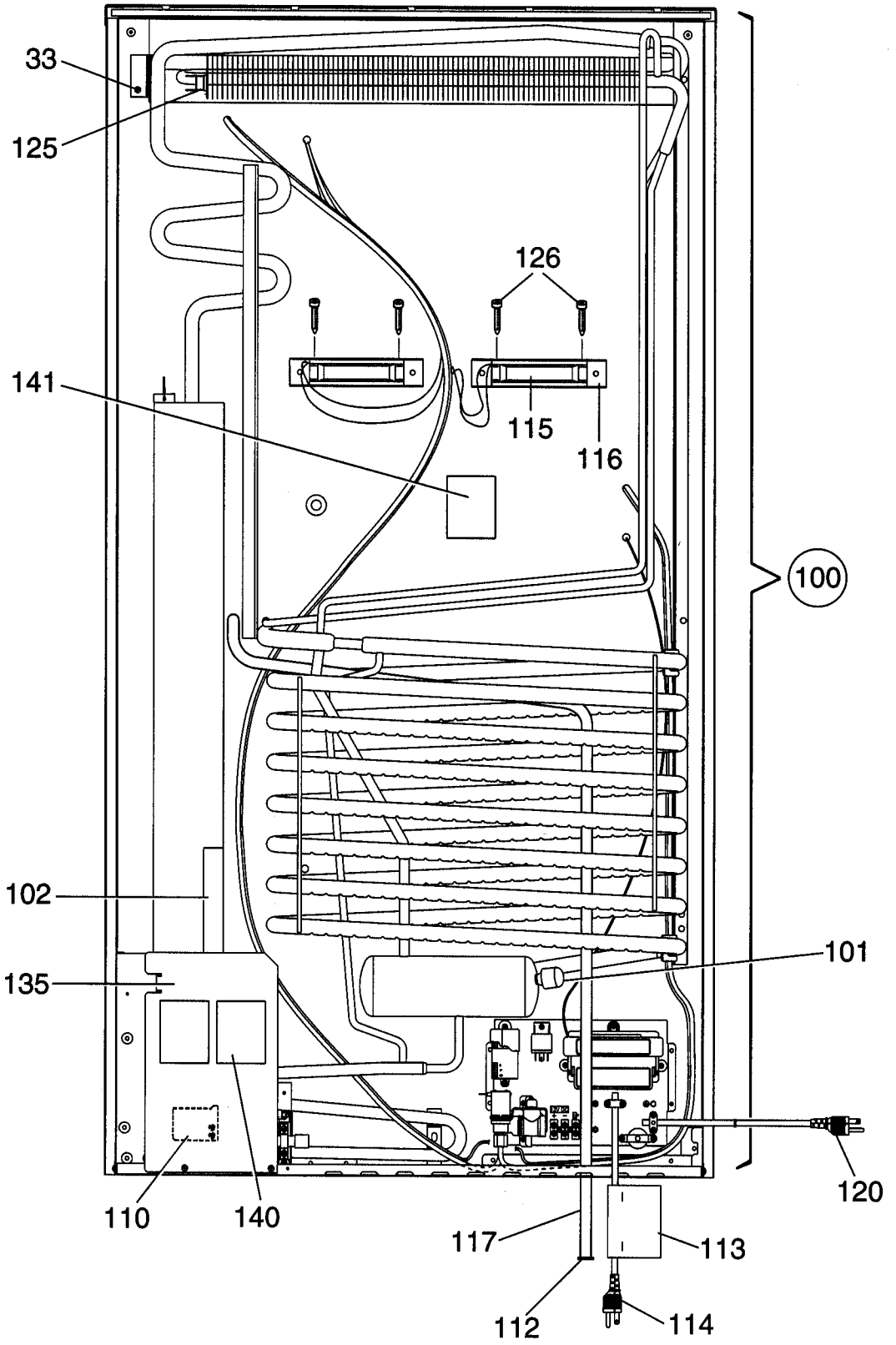

NCMOE2091376

INDEX	PART NO	MODEL	DESCRIPTION
33	3858039096	A	Screw, MRX M5X14
100	2934949104	A	Cooling Unit W/fuse 949
101	0173228008	A	Cap
102	2933557023	A	Flap
110	3850600010	A	Protection, Blow Out
112	2932115013	A	Discharge Pipe, Plug
113	2932733005	A	Decal
114	2002699110	A	Cord, Power
115	3851183016	A	Fan
116	3851184014	A	Bracket Fan
117	2932749100	A	Drain Hose
120	2002699177	A	Cord, Power
125	3850306055	A	Thermal
126	3858002318	A	Screw RXS 4.2X32
135	2932155019	A	Support Plate
140	3850582002	A	Decal
141	3850583000	A	Decal

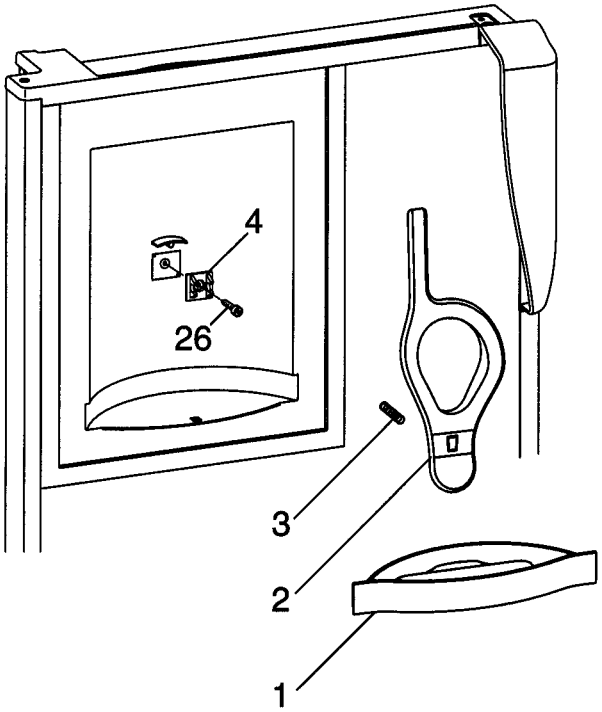

NCMO2095210

INDEX	PART NO	MODEL	DESCRIPTION
1	3851064018	A	Drop Tray, Balck
2	3851063010	A	Actuator, Water
3	3851065015	A	Spring
4	3851254015	A	Bracket
26	3858006046	A	Screw PT 30x12

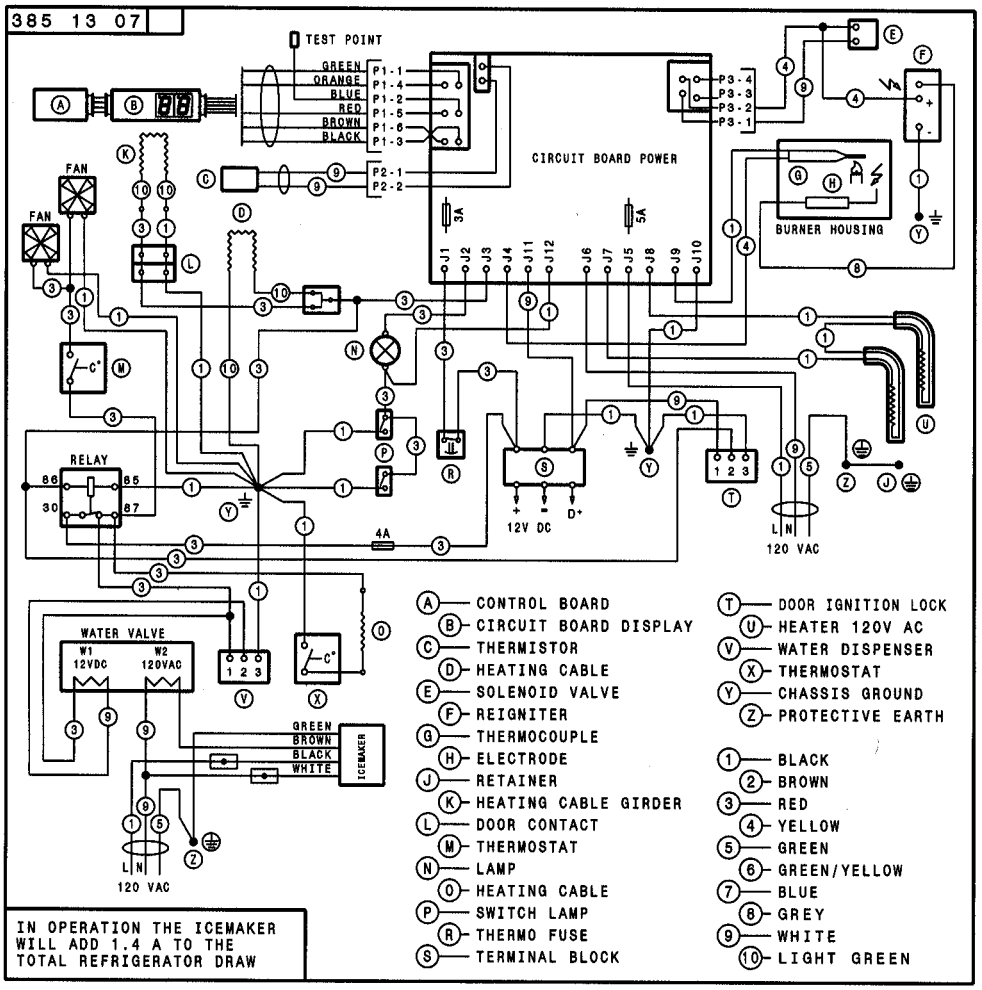
385 13 07
TEST POINT
GREEN
ORANGE
BLUE
RED
BROWN
BLACK
P1-1
P1-4
P1-2
P1-5
P1-6
P1-3
P2-1
P2-2
P3-4
P3-3
P3-2
P3-1
CIRCUIT BOARD POWER
3A
5A
J1
J2
J3
J4
J11
J12
J6
J7
J5
J8
J9
J10
FAN
FAN
BURNER HOUSING
RELAY
86
85
30
87
4A
12V DC
D+
L N
120 VAC
WATER VALVE
W1
12VDC
W2
120VAC
1 2 3
GREEN
BROWN
BLACK
WHITE
ICEMAKER
L N
120 VAC
IN OPERATION THE ICEMAKER WILL ADD 1.4 A TO THE TOTAL REFRIGERATOR DRAW
A — CONTROL BOARD
B — CIRCUIT BOARD DISPLAY
C — THERMISTOR
D — HEATING CABLE
E — SOLENOID VALVE
F — REIGNITER
G — THERMOCOUPLE
H — ELECTRODE
J — RETAINER
K — HEATING CABLE GIRDER
L — DOOR CONTACT
M — THERMOSTAT
N — LAMP
O — HEATING CABLE
P — SWITCH LAMP
R — THERMO FUSE
S — TERMINAL BLOCK
T — DOOR IGNITION LOCK
U — HEATER 120V AC
V — WATER DISPENSER
X — THERMOSTAT
Y — CHASSIS GROUND
Z — PROTECTIVE EARTH
1 — BLACK
2 — BROWN
3 — RED
4 — YELLOW
5 — GREEN
6 — GREEN/YELLOW
7 — BLUE
8 — GREY
9 — WHITE
10 — LIGHT GREEN

N38513070