Dometic®

USA
SERVICE OFFICE
Dometic Corporation
2320 Industrial Parkway
Elkhart, IN 46516
574-294=2511

CANADA
Dometic Corporation
46 Zatonske Unit 3
Brantford, ON N3T 5L8
CANADA
519-720-9578

For Service Center Assistance Call:
800-544-4881

PARTS LIST
RM1350

Product NO	Model	Voltage	Refrigerator Frame Color	Door Style	Door Trim Color	Market	Brand
921148320	RM1350	120 V	Black	Surround	Black	USA/ Canada	Dometic

PARTS LIST

MODEL RM1350

Form No. 3311553.000 4/07
©2007 Dometic Corporation
LaGrange, IN 46761

SPECIFICATIONS

Product number*	921148320
Energy Source**	
Watts	210
Ohms	69
Amperage	1.75
BTU's Gas Burner	2080
Jet Size	#76
Flue Baffle	
Size	6" x 15/16"
Position Above Burner	1-1/4"
Ice Bucker	1
Crispers	3
Bottle Holders	2
Climate Control Heater, Light Flap, and Fan	
Watts	30
Ohms	4.8
Amperage	2.5

* Product number located on refrigerator data plate.
** 12volt DC power is required to operate the refrigerator controls on all models

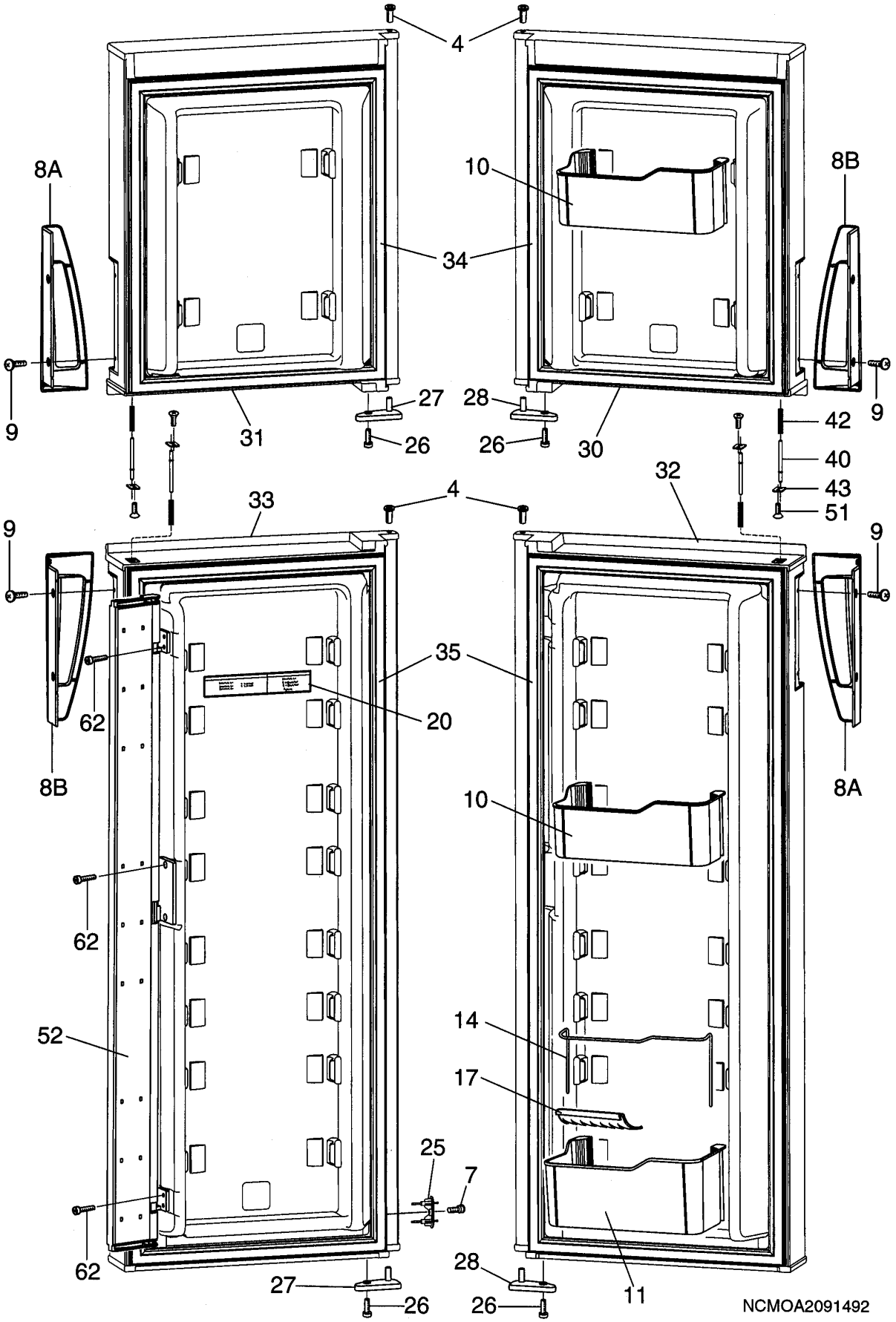
4
8A
10
8B
34
9
27
28
9
31
26
26
30
42
40
32
43
33
4
51
9
9
35
62
20
8B
8A
10
62
52
14
17
25
7
62
28
27
26
26
11
NCMOA2091492

INDEX	PART NO	MODEL	DESCRIPTION
4	2931171066	A	Hinge black
7	3858002102	A	Screw RXS B4X9.5
8A	3851159016	A	Handle
8B	3851159024	A	Hancle
9	3858040029	A	Screw, ELM 5X10 black
10	3850973011	A	Shelf, door clear
11	3851052013	A	Shelf, door clear
14	3850976022	A	Rack
17	2932658046	A	Bottle holder, white
20	3851235006	A	Decal
25	3851214019	A	Contact pin
26	3858006061	A	Screw, PT 35X12
27	3851244016	A	Door stop left
28	3851244024	A	Door stop right
30	3851169031	A	Freezer door right
31	3851169049	A	Freezer door left
32	3851170047	A	Refr door right
33	3851170054	A	Refr door left
34	3851228027	A	Door gasket freezer
35	3851228019	A	Door gasket refr
40	3851092019	A	Lock bar
42	3850497011	A	Spring
43	3850496013	A	Plate
51	3858071024	A	Screw, EPT 40X14 black
52	3851104012	A	Flap
62	3858002268	A	Screw, RXS B8X19

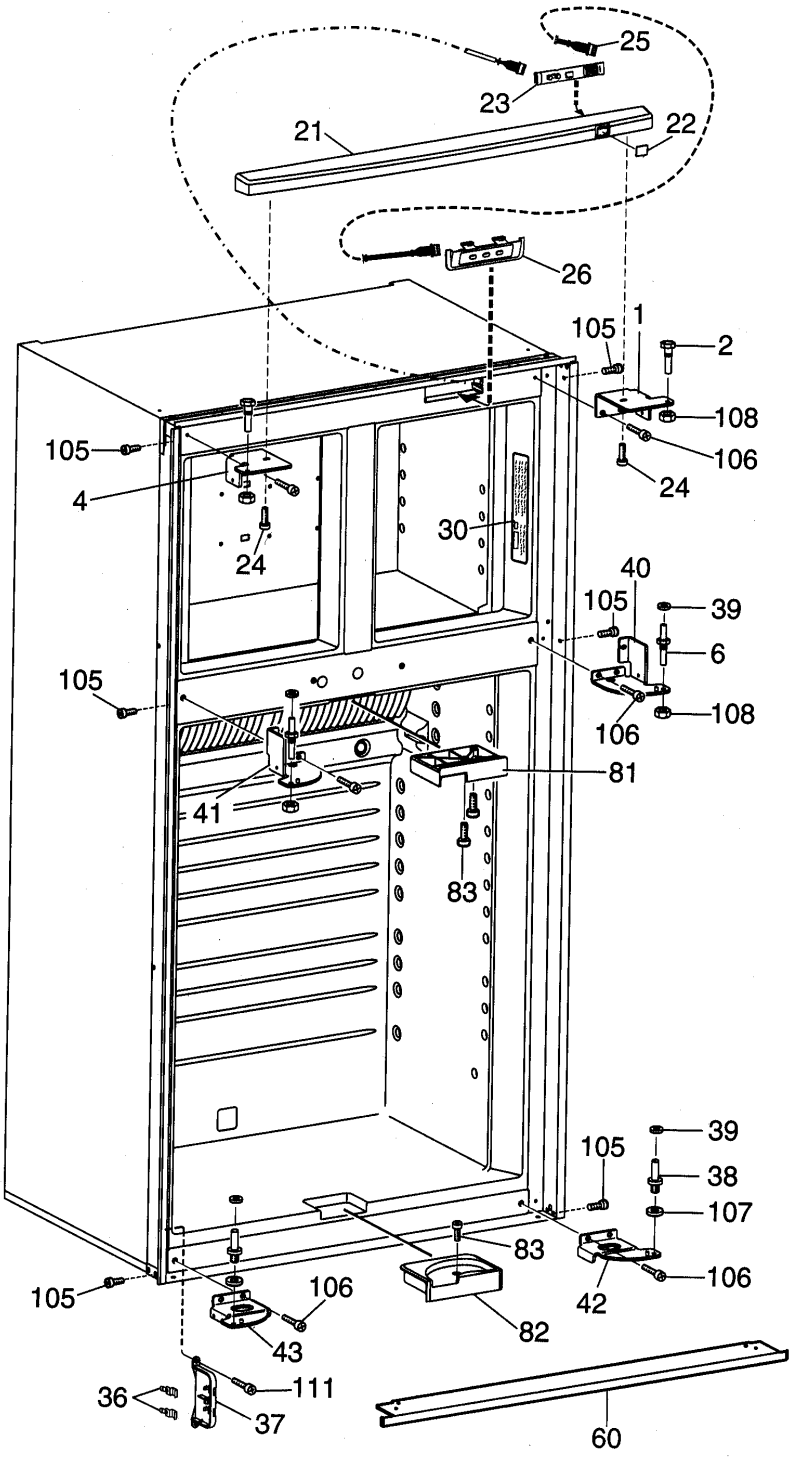

NCMOB2088279

INDEX	PART NO	MODEL	DESCRIPTION
1	3850989025	A	Hinge, Black
2	2932647015	A	Hinge Pin, Upper
4	3850989017	A	Hinge, Black
6	2932648021	A	Hinge Pin, Black
21	3851073019	A	Front, Black
22	3850970017	A	Lens
23	3850969019	A	Board, Control
24	3858006012	A	Screw, PT PH4X10
25	2954568016	A	Harness
26	3850964010	A	Control Panel, Complete
30	3851035000	A	Decal
36	3851212013	A	Contact Plate
37	3851211015	A	Holder
38	2932649029	A	Hinge Pin
39	3858010022	A	Washer
40	3851230049	A	Hinge
41	3851230031	A	Hinge
42	3851230023	A	Hinge lower
43	3851230015	A	Hinge Lower
60	2932664093	A	Base Cover Black
81	3851102016	A	Guiding Device Upper
82	3851103014	A	Guiding Device Lower
83	3858002300	A	Screw, RXS 4.25X25
105	3858004041	A	Screw MRX 4X6FZ
106	3858039104	A	Screw, MRX-RR M4X10, Bblack
107	3858010113	A	Washer, BRB 6.4X12.5
108	3858009057	A	Nut, Black
111	3858002201	A	Screw, RXS B8X9.5

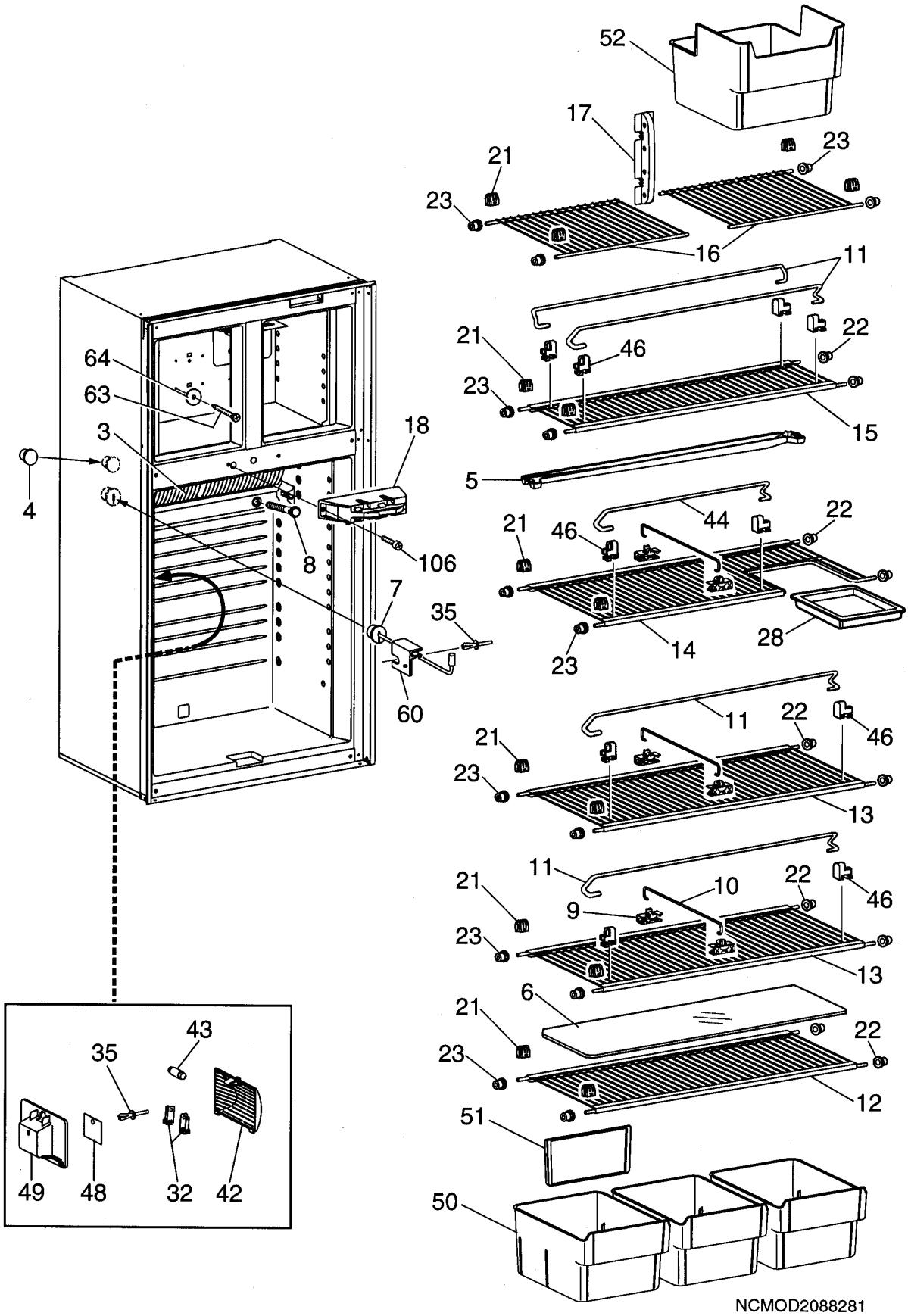
52
17
21
23
23
16
11
21
46
22
23
15
64
63
3
18
4
5
44
22
21
46
8
106
7
35
28
14
23
60
11
22
46
21
23
13
11
10
22
46
21
9
23
13
6
21
22
23
12
51
50
43
35
49
48
32
42
NCMOD2088281

INDEX	PART NO	MODEL	DESCRIPTION
3	3851166011	A	Cooling Flange
4	3851222012	A	Cover
5	3851050017	A	Drip tray, clear
6	2931117226	A	Shelf, Plastic
7	2002301006	A	Cover
8	3851229017	A	Drain, Pipe
9	3851208011	A	Golder,Sliding
10	3851209019	A	Rack
11	2007337252	A	Rack
12	3851236012	A	Shelf, Wire
13	3851236020	A	Shelf, Wire
14	3851237010	A	Shelf, Wire
15	3851236038	A	Shelf, Wire
16	3851023014	A	Shelf, Wire
17	3851153019	A	Shelf Support, Rear
18	3851075014	A	Door Latch
21	2932102011	A	Shelf Support
22	2932101013	A	Plug
23	2932103019	A	Plug
28	2932636018	A	Box
32	2932108018	A	Contact Pin
35	0165521030	A	Rivet
42	3850962014	A	Lamp Glass
43	2007290006	A	Lamp 10W 12VDC
44	2007337179	A	Rack
46	2930693045	A	Holder
48	3850963012	A	Reflector
49	3850961016	A	Lamp Housing
50	3851089015	A	Crisper, Clear
51	3851090013	A	Divider
52	3851118012	A	Ice Container
60	3850679014	A	Bracket Thermistor
63	3858036027	A	Screw, KFXS 4.8X55
64	3858010147	A	Washer
106	3858039104	A	ScrewMRX-TT M4X10 Black

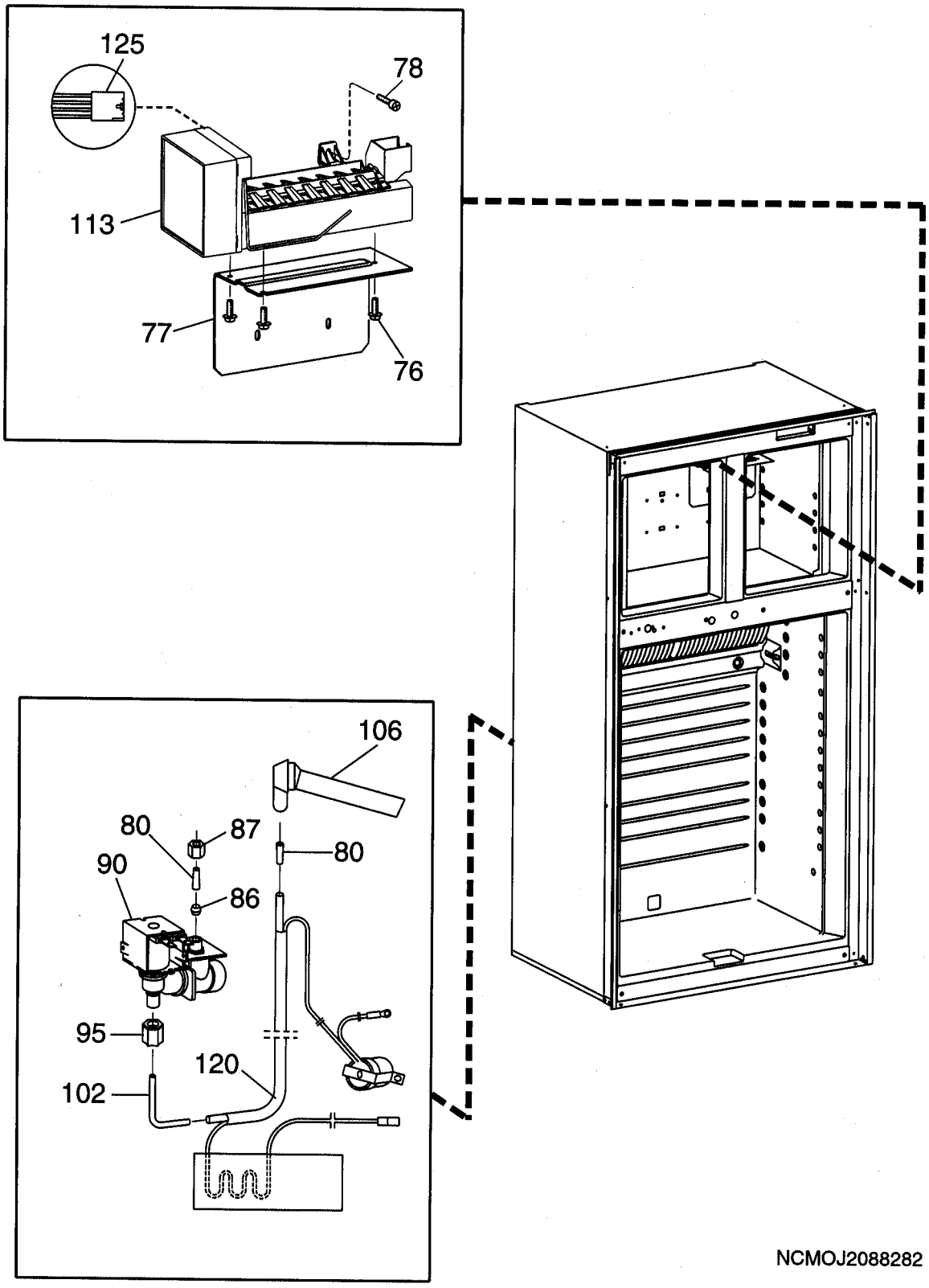
125
78
113
77
76
106
80
87
80
90
86
95
120
102
NCMOJ2088282

INDEX	PART NO	MODEL	DESCRIPTION
76	3108709.027	A	Screw
77	3581142012	A	Shelf, Ice Maker
78	3858004181	A	Screw, MRX M4X16
80	3108708.185	A	Insert, Inlet
86	3108706.296	A	Ferrule, Inlet
87	3108706.288	A	Nut, Brass Inlet
90	3108706.270	A	Valve, Water, 2Way
95	2930839010	A	Nut
102	3850220017	A	Insert, Copper Water Inlet Valve
106	3851203012	A	Filling Tube
113	3108705.553	A	Ice Maker (Mid South M1)
120	3850688031	A	Kit, Heater, Water Inlet Valve
125	2954578015	A	Harness, Ice Maker

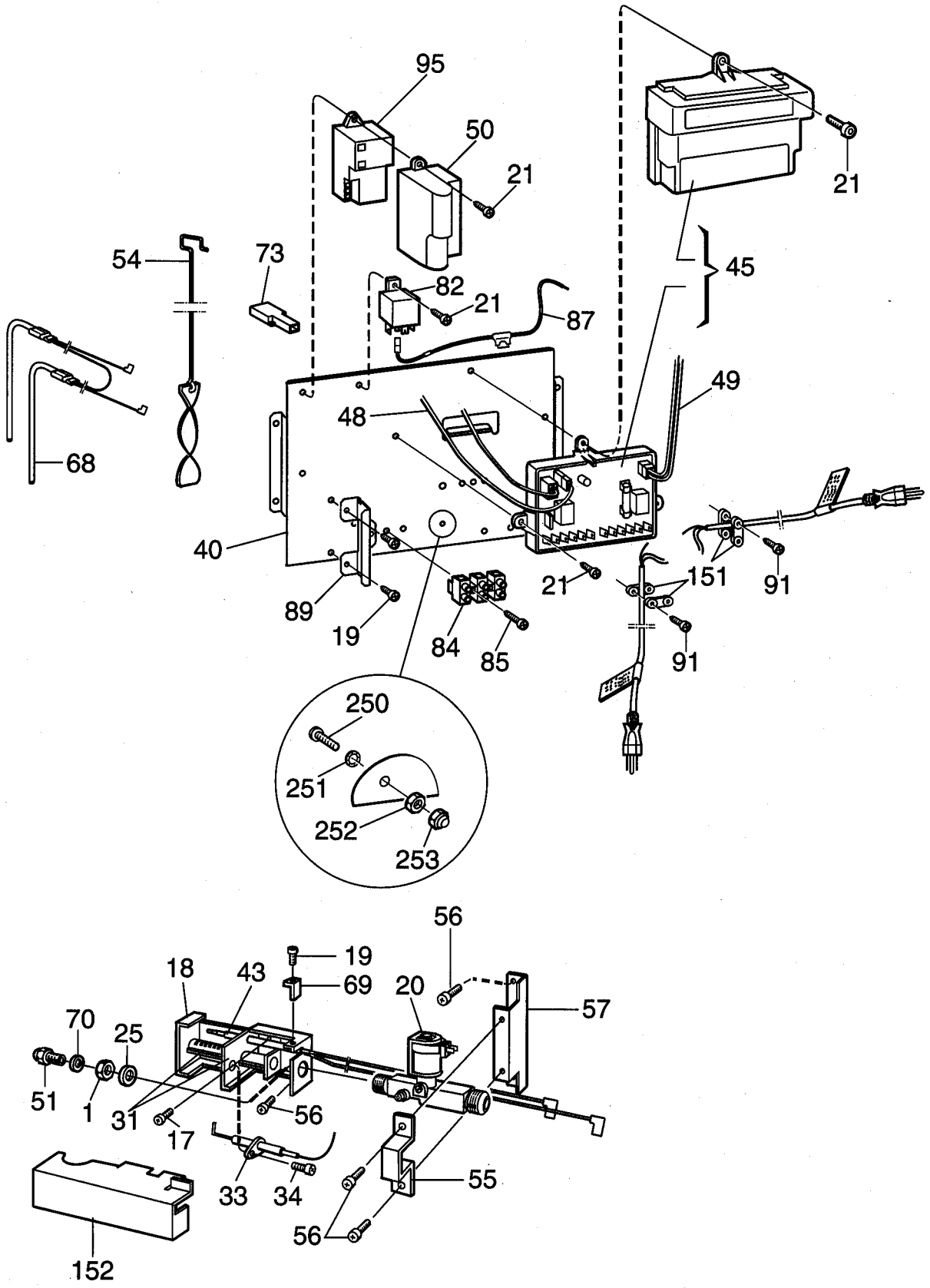

NCMOH2085815

INDEX	PART NO	MODEL	DESCRIPTION
1	0140207044	A	Nut
17	3858039039	A	Screw, MRX M4X8
18	2932161017	A	Burner Housing
19	3858002144	A	Screw, RXS B6X935
20	2932615020	A	Solenoid Valve
21	3858002151	A	Screw RXS B6X13
25	3858010071	A	Washer 12.5X18.5X1
31	0955001672	A	Burner Pipe
33	2932781046	A	Electrode
34	3858002052	A	Screw, RXS B6X6.5
40	3851198014	A	Bracket
43	2931826032	A	Thermocouple
45	3851005029	A	Module, Power
48	3851059042	A	Conductor, Thermistor
49	2954539058	A	Conductor, Solenoid Valve
50	2931886010	A	Cover
51	2007419332	A	Jet #76
54	2932667054	A	Flame Spreader
55	2932662014	A	Bracket
56	3858039047	A	Screw, MRX M4X10
57	2932043017	A	Support Plate
68	3850644539	A	Heater 210W
69	2930660010	A	Fixing Bracket
70	2007457001	A	Washer
73	2931963017	A	Connector Y
82	2930385006	A	Relay
84	3858022027	A	Terminal Block
85	3858002158	A	Screw, RXS B6X25
87	2954553034	A	Wire, W/fuse
89	3851199012	A	Bracket, Water, Valve
91	3858002177	A	Screw, RXS B6X19
95	2931132019	A	Spark Generator
151	0561014010	A	Cable Clamp
152	2931401018	A	Cover
250	3858004033	A	Screw, MRX M4X16
251	3858011012	A	Washer, Lock
252	3858009016	A	Nut Hex
253	3858028024	A	Lock Nut

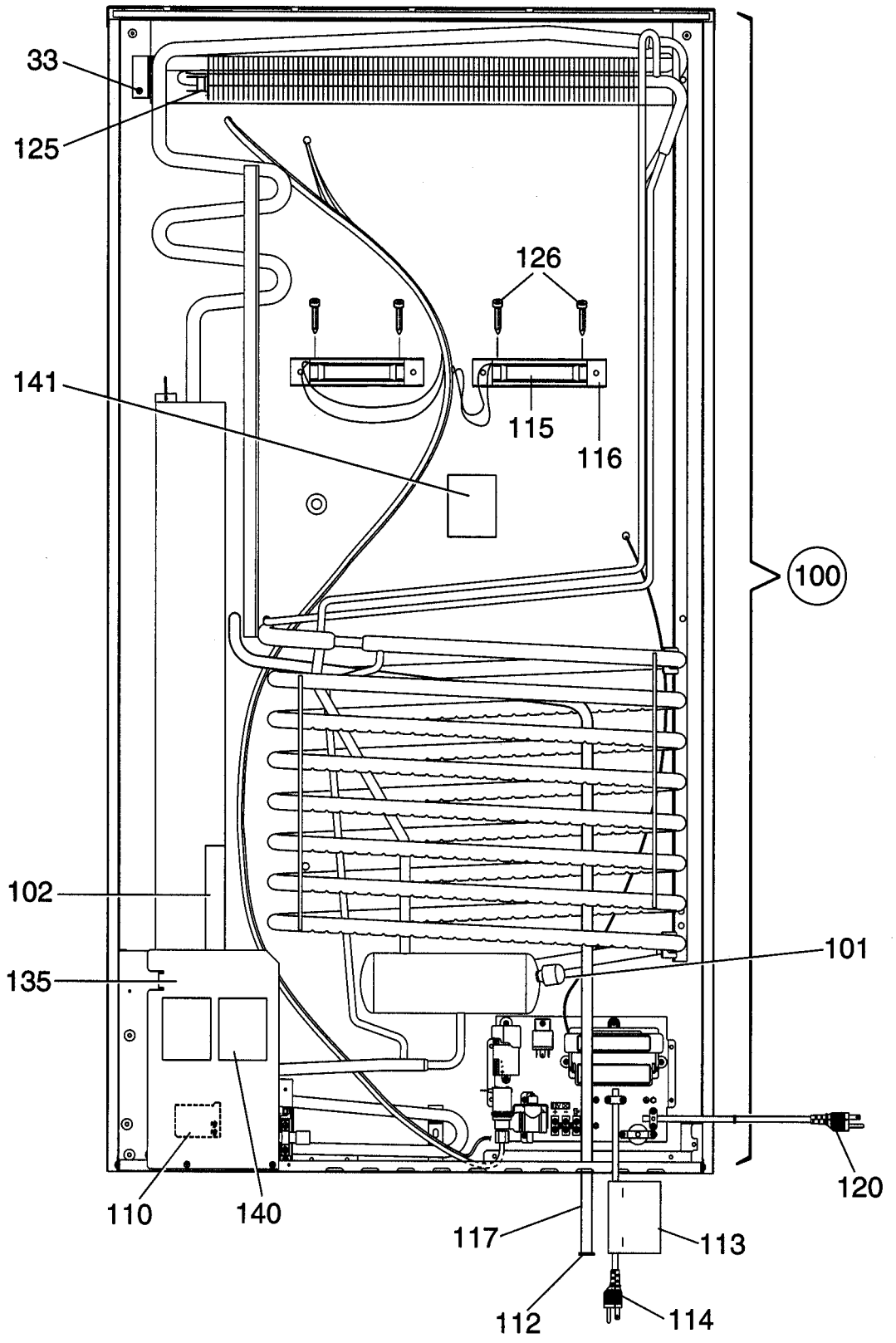

NCMOE2091497

INDEX	PART NO	MODEL	DESCRIPTION
33	3858039096	A	Screw, MRX M5X14
100	2934949104	A	Cooling Unit W/fuse 949
101	0173228008	A	Cap
102	2933557023	A	Flap
110	3850600010	A	Protection, Blow Out
112	2932115013	A	Discharge Pipe, Plug
113	2932733005	A	Decal
114	2002699110	A	Cord, Power
115	3851183016	A	Fan
116	3851184014	A	Bracket Fan
117	2932749100	A	Drain Hose
120	2002699177	A	Cord, Power
125	3850306055	A	Thermal
126	3858002318	A	Screw RXS 4.2X32
135	2932155019	A	Support Plate
140	3850582002	A	Decal
141	3850583000	A	Decal

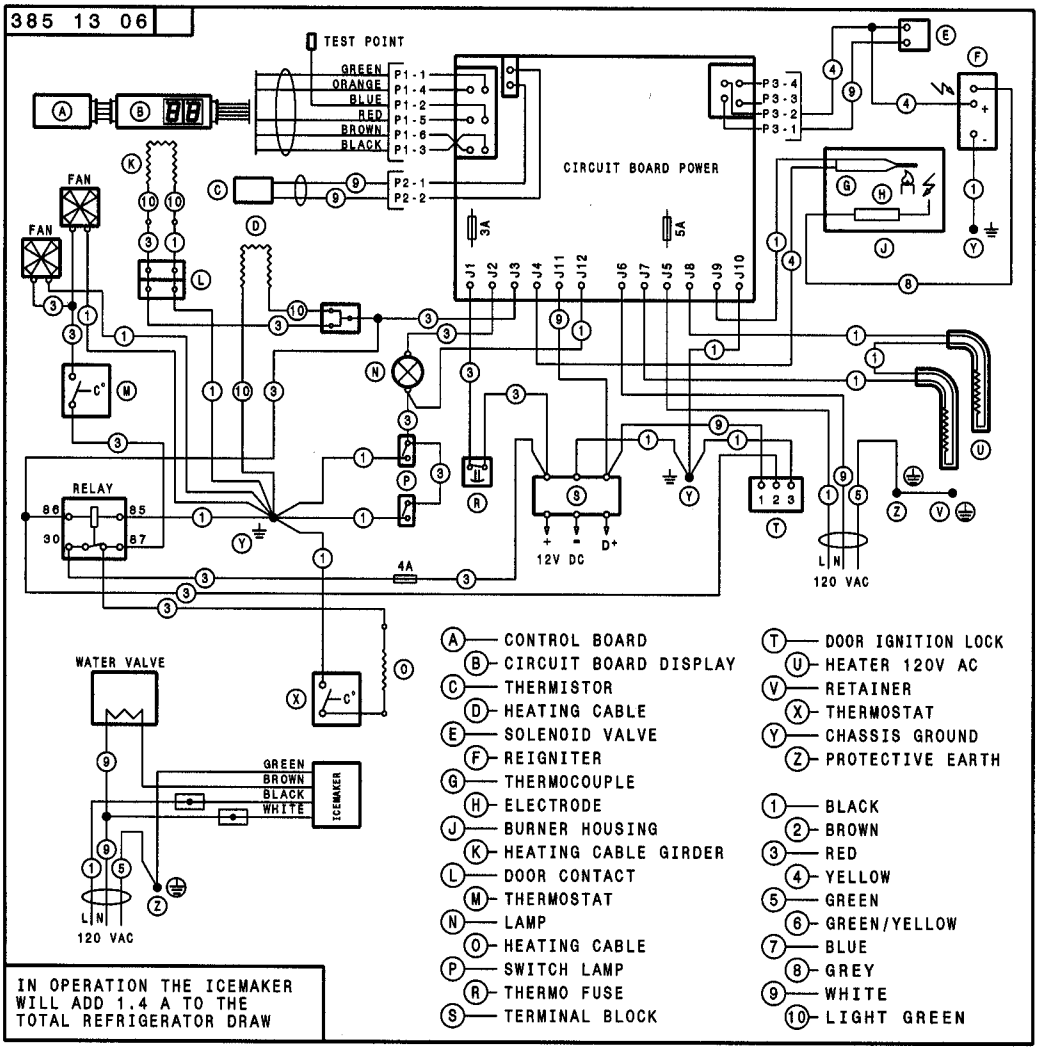
385 13 06
TEST POINT
GREEN
ORANGE
BLUE
RED
BROWN
BLACK
P1-1
P1-4
P1-2
P1-5
P1-6
P1-3
P2-1
P2-2
P3-4
P3-3
P3-2
P3-1
CIRCUIT BOARD POWER
3A
5A
J1
J2
J3
J4
J11
J12
J6
J7
J5
J8
J9
J10
FAN
FAN
RELAY
86
85
30
87
4A
12V DC
D+
120 VAC
L N
WATER VALVE
GREEN
BROWN
BLACK
WHITE
ICEMAKER
120 VAC
L N
IN OPERATION THE ICEMAKER WILL ADD 1.4 A TO THE TOTAL REFRIGERATOR DRAW
A CONTROL BOARD
B CIRCUIT BOARD DISPLAY
C THERMISTOR
D HEATING CABLE
E SOLENOID VALVE
F REIGNITER
G THERMOCOUPLE
H ELECTRODE
J BURNER HOUSING
K HEATING CABLE GIRDER
L DOOR CONTACT
M THERMOSTAT
N LAMP
O HEATING CABLE
P SWITCH LAMP
R THERMO FUSE
S TERMINAL BLOCK
T DOOR IGNITION LOCK
U HEATER 120V AC
V RETAINER
X THERMOSTAT
Y CHASSIS GROUND
Z PROTECTIVE EARTH
1 BLACK
2 BROWN
3 RED
4 YELLOW
5 GREEN
6 GREEN/YELLOW
7 BLUE
8 GREY
9 WHITE
10 LIGHT GREEN

N38513060