Dometic

When ordering parts, always state:
MODEL NO. - PRODUCT NO. - QUANTITY - PART NUMBER - DESCRIPTION
For Electric Details also state:
VOLTAGE - WATTAGE

USA
SERVICE OFFICE
Dometic, LLC
2320 Industrial Parkway
Elkhart, IN 46516
574-294-2511

CANADA
Dometic, LLC
46 Zatonski, Unit 3
Brantford, ON N3T 5L8
CANADA
519-720-9578

For Service Center Assistance Call:
800-544-4881

REFRIGERATOR MODEL RM2820

Product Number	Model	Voltage	Refrig. Frame Color	Door Style	Door/Door Trim	Market	Brand
921596014	RM2820	120VAC	Taupe	Standard	Standard	USA, CAN	Dometic

PARTS LIST

MODEL RM2820 Series

REVISION:
Form No. 3311256.014 10/08
(Replaces 3311256.000)
©2008 Dometic, LLC
LaGrange, IN 46761

3311256.014

ALPHABETICAL INDEX

	Page	Pos. No
Cabinet, exterior components	1-2	1-531
Door Asm.	3-4	1-26
Cabinet, interior components	5-6	3-112
Control & Burner components	7-8	1-253
Cabinet, rear view	9-10	33-999
Wiring Diagram	11	--

SPECIFICATIONS

PRODUCT NO.*	921596014
Energy Source **	120VAC/GAS
AC Heating Element	
Watts	325
Ohms	44
Amperage	2.7
BTU's Gas Burner	1500
Jet Size	# 58
Flue Baffle	
Size	5-1/8" x 13/16"
Position Above Burner	1-7/8"
Ice Trays	0
Crispers	2
Bottle Holders	2
Climate Control Heater	
Watts	6
Ohms	24
Amperage	.5

* Product number located on refrigerator data plate.
** 12 volt DC power is required to operate the refrigerator controls on all models.

528693T

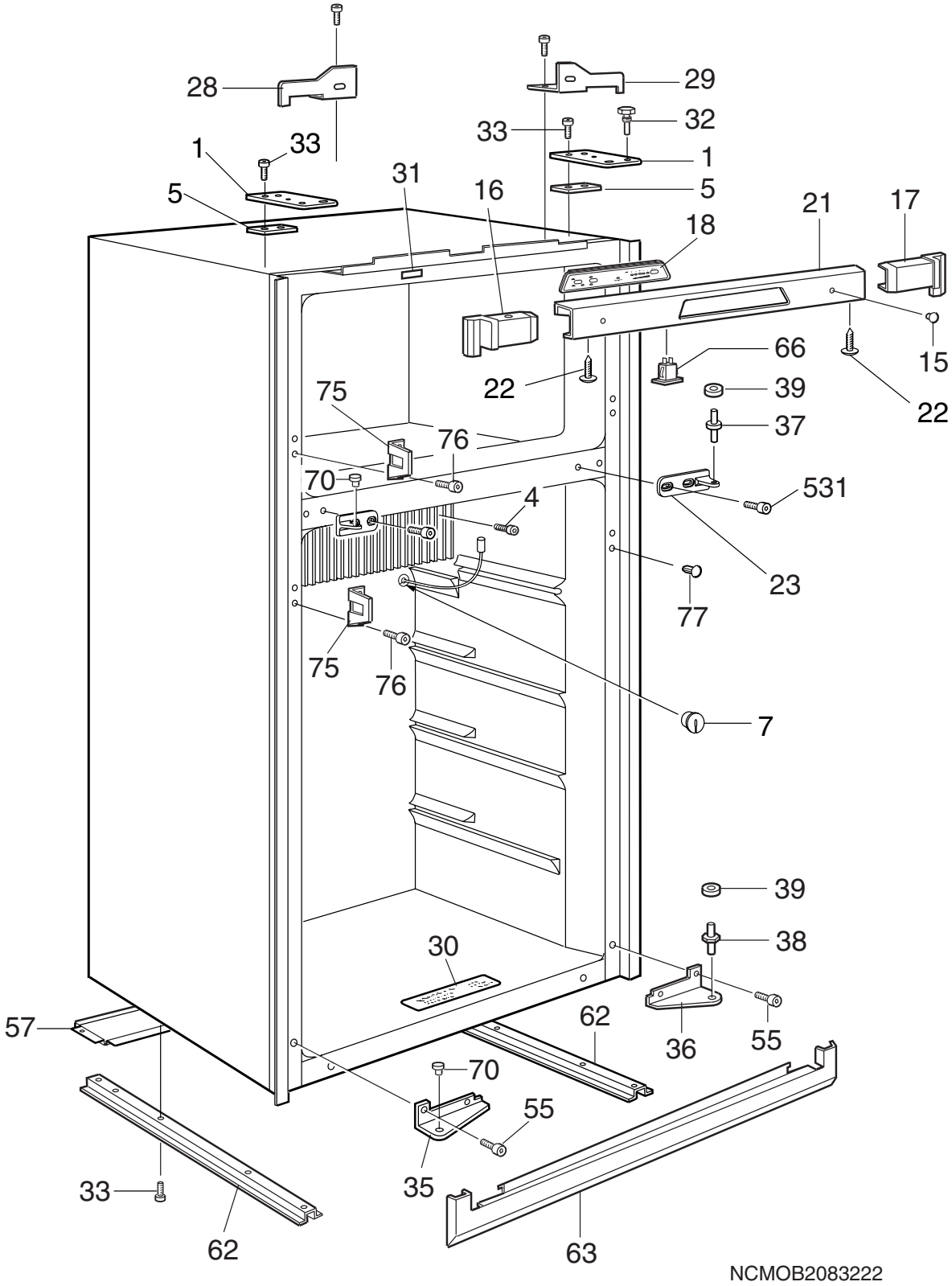
28
29
33
32
1
33
1
5
31
16
5
21
17
18
66
15
22
39
22
75
37
76
70
531
4
23
77
75
76
7
39
38
30
57
62
36
55
70
55
35
33
62
63
NCMOB2083222

Exploded view no.: NCMOB2083222
N00002090214

Matrix	PNC	ELC	ProdDate	Model
A	921596014	00	20061213	RM2820

Pos	Part No.	Matrix	Description
1	2931291013	A	Hinge,upper
4	3858036019	A	Screw,zinc-plated,KFXS B10X38
5	2931292011	A	Washer
7	2002301006	A	Cover
15	2930132069	A	Plug
16	2931866020	A	Side plate,left
17	2931866012	A	Side plate,right
18	2932884014	A	Panel,display board
21	2931865139	A	Front
22	3858047016	A	Screw,with,washer
23	3850957014	A	Hinge,middle
28	2932125020	A	Bracket,left
29	2932125012	A	Bracket,right
30	2932435007	A	Instruction plate
31	2932779008	A	Label
32	2931288019	A	Hinge pin
33	3858039096	A	Screw,zinc-plated,MRX M5X14
35	2932111012	A	Hinge,left
36	2932111020	A	Hinge,right
37	2931287011	A	Hinge pin,middle
38	2931623017	A	Hinge pin
39	3858010089	A	Washer,zinc-plated,5,5X12X1
55	3858056017	A	Screw,zinc-plated,MFX M4X12
57	2930664012	A	Protective plate
62	2932110014	A	Runner
63	2932112044	A	Base panel
66	2932680016	A	Switch
70	2931284026	A	Plug,dark grey
75	2931511014	A	Bracket
76	3858002102	A	Screw,zinc-plated,RXS B4X9,5
77	2931510032	A	Covering washer,plastic
531	3858039047	A	Screw,zinc-plated,MRX M4X10

© Dometic

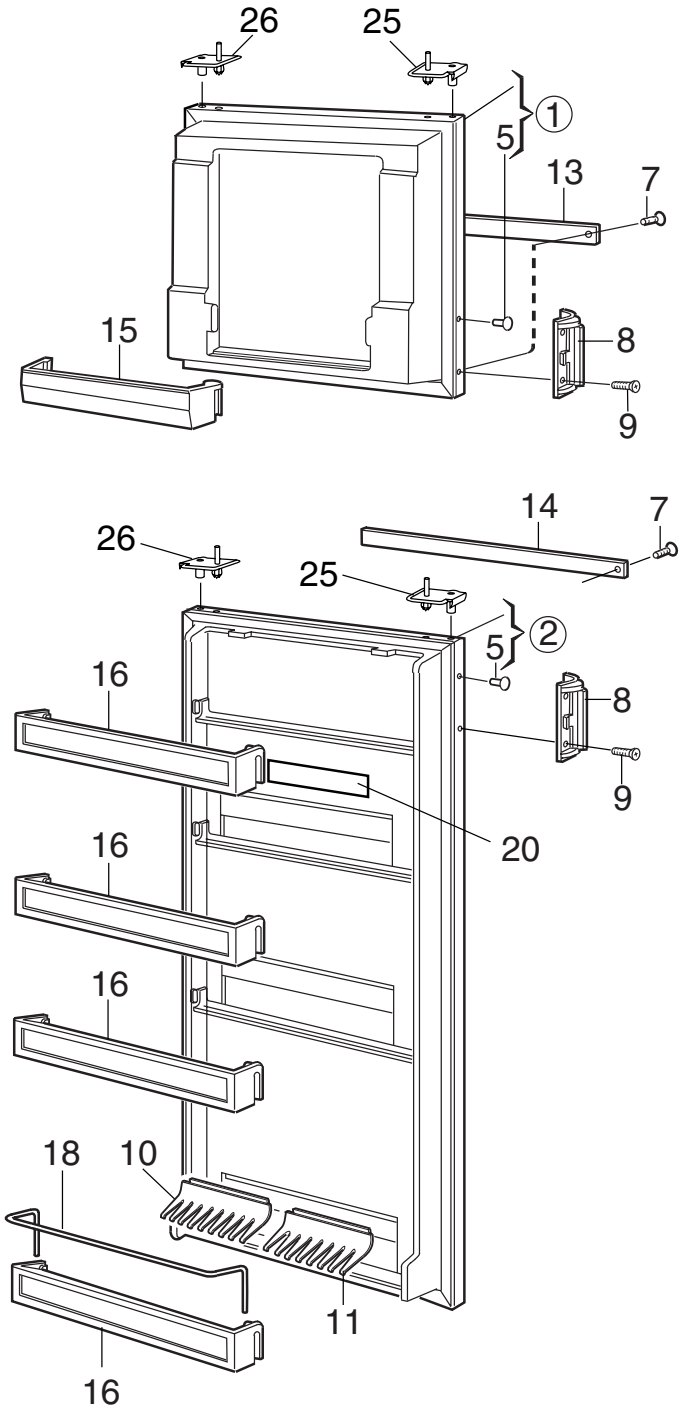

NCMOA2090215

Exploded view no.: NCMOA2090215
N00002090215

Matrix	PNC	ELC	ProdDate	Model
A	921596014	00	20061213	RM2820

Pos	Part No.	Matrix	Description
1	2931591156	A	Door,cpl.
2	2931590182	A	Door,cpl.
5	2931510032	A	Covering washer,plastic
7	3858002110	A	Screw,zinc-plated,RXS B4X16
8	2931600023	A	Handle,cpl.
9	3858002102	A	Screw,zinc-plated,RXS B4X9,5
10	2930715053	A	Bottle holder,179mm
11	2930715061	A	Bottle holder,202mm
13	3850382023	A	Decoration
14	3850382080	A	Decoration
15	2931418038	A	Door shelf
16	2001732185	A	Door shelf
18	2001734017	A	Rack
			Up to serial no. 82400048
20	3851235006	A	Label
25	2931582015	A	Hinge bushing
26	2931582023	A	Hinge bushing

© Dometic

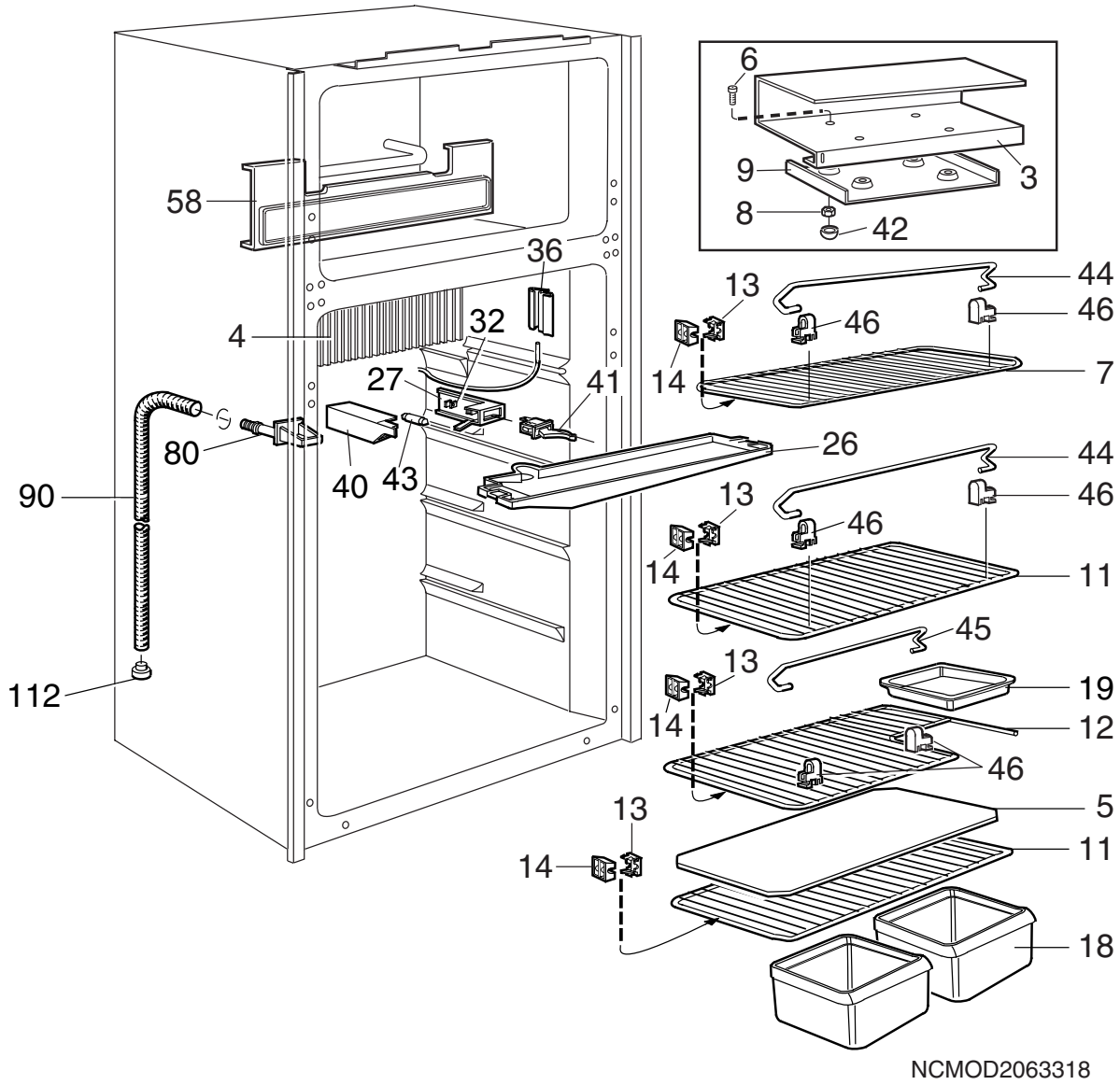
6
9
3
8
42
58
36
44
13
46
46
4
32
14
7
27
41
80
26
44
40
43
90
13
46
46
14
11
45
13
19
112
14
12
46
5
13
11
14
18
NCMOD2063318

Exploded view no.: NCMOD2063318
N00002090216

Matrix	PNC	ELC	ProdDate	Model
A	921596014	00	20061213	RM2820

Pos	Part No.	Matrix	Description
3	2007535038	A	Shelf
4	2007605013	A	Cooling flange
5	2931117051	A	Shelf,plastic
6	3858041019	A	Screw,brass,nickel plated,M6S M5X20
7	2002652374	A	Grating shelf,7"
8	3858009073	A	Nut,brass,nickel plated,ML6 M5
9	2007649011	A	Plate
11	2002652366	A	Grating shelf,12"
12	2930133158	A	Shelf
13	2007393024	A	Stop,outside
14	2007392026	A	Stop,inside
18	2002726160	A	Vegetable box
19	2930136011	A	Box
			Up to serial no. 82400048
26	2007610013	A	Drop tray
27	2932523018	A	Lampholder
32	2932108018	A	Contact pin
36	3851088017	A	Bracket,thermistor
40	2932106012	A	Lamp cover
41	3850959010	A	Switch,For Electrolux see,294082500
42	2930487000	A	Lid
43	2007290006	A	Lamp,10W,12V
44	2007337138	A	Rack,L=381mm approx 15"
45	2007337187	A	Rack,L236
			Up to serial no. 82400048
46	2930693045	A	Holder
58	2931006015	A	Coverplate
80	2007269026	A	Drain
90	2932749019	A	Drain hose,L=1375mm
112	2932115013	A	Discharge pipe,plug

© Dometic

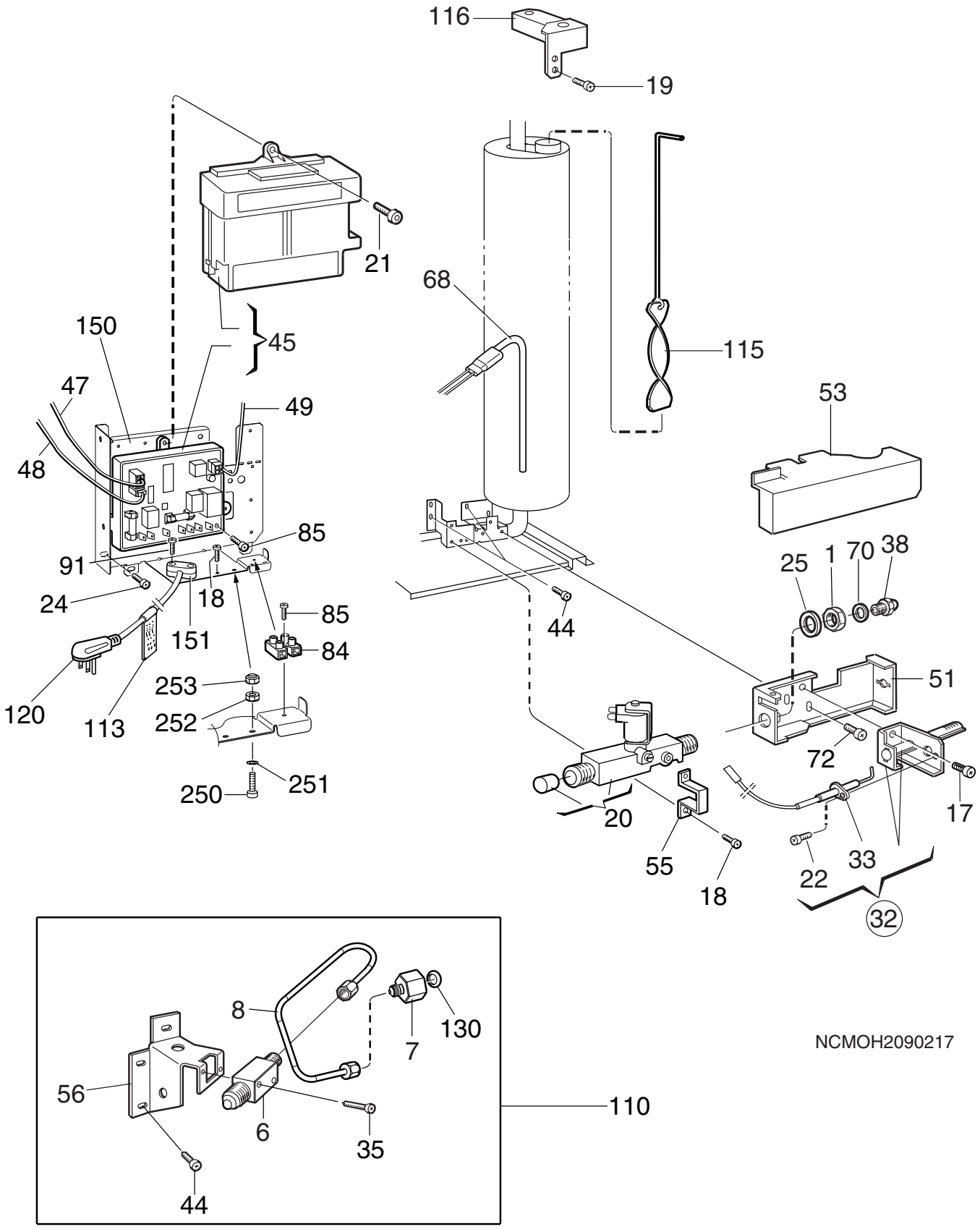
116
19
21
68
115
150
45
47
49
53
48
85
91
25
1
70
38
24
18
85
44
151
84
51
253
120
113
252
72
250
251
20
17
55
33
18
22
32
8
130
7
NCMOH2090217
56
110
6
35
44

Exploded view no.: NCMOH2090217
N00002090217

Matrix	PNC	ELC	ProdDate	Model
A	921596014	00	20061213	RM2820

Pos	Part No.	Matrix	Description
1	140207044	A	Nut
6	3850665013	A	Nipple,gas connection
7	3850663018	A	Nipple
8	3850662010	A	Gas pipe
17	3858039039	A	Screw,zinc-plated,MRX M4X8
18	3858039047	A	Screw,zinc-plated,MRX M4X10
19	3858002144	A	Screw,zinc-plated,RXS B6X9,5
20	2932615012	A	Solenoid valve
21	3858002151	A	Screw,zinc-plated,RXS B6X13
22	3858005014	A	Screw,zinc-plated,RXK B6X9,5
24	3858020021	A	Screw,zinc-plated,B8X25
25	3858010071	A	Washer,12,5X18,5X1
32	2930697079	A	Burner,with,conductor
33	2932781012	A	Electrode,with,conductor
35	3858039070	A	Screw,zinc-plated,M4x25
38	2007419217	A	Jet,complete,no. 58
44	3858039096	A	Screw,zinc-plated,MRX M5X14
45	3850712013	A	Power,module,integrated
47	2954542011	A	Conductor,PCB
48	3851059034	A	Conductor,thermistor
49	2954539041	A	Conductor,solenoid valve
51	2931913012	A	Burner housing
53	2931572016	A	Cover,burner housing
55	2932662014	A	Bracket
56	2932116011	A	Mounting plate
68	3850644422	A	Heater,325W, 120V
70	2007457001	A	Washer,0,5mm
72	3858039021	A	Screw,zinc-plated,MRX M4X6
84	3858022019	A	Terminal block
85	3858002185	A	Screw,zinc-plated,RXS B6X25
91	3858002177	A	Screw,zinc-plated,RXS B6X19
110	3850671011	A	Kit,gas connection
113	2932733005	A	Label
115	2007590066	A	Flue,baffle
116	2931540013	A	Flue,cap,cpl.
120	2002699094	A	Cord set
130	2930500000	A	Seal washer,copper
150	3850337019	A	Bracket
151	561014010	A	Cable clamp
250	3858004033	A	Screw,zinc-plated,MRX M4X16
251	3858011012	A	Lock washer,zinc-plated,4,3X8
252	3858009016	A	Hexagon nut,zinc-plated,M4X3,2
253	3858028024	A	Lock nut,zinc-plated,M4

© Dometic

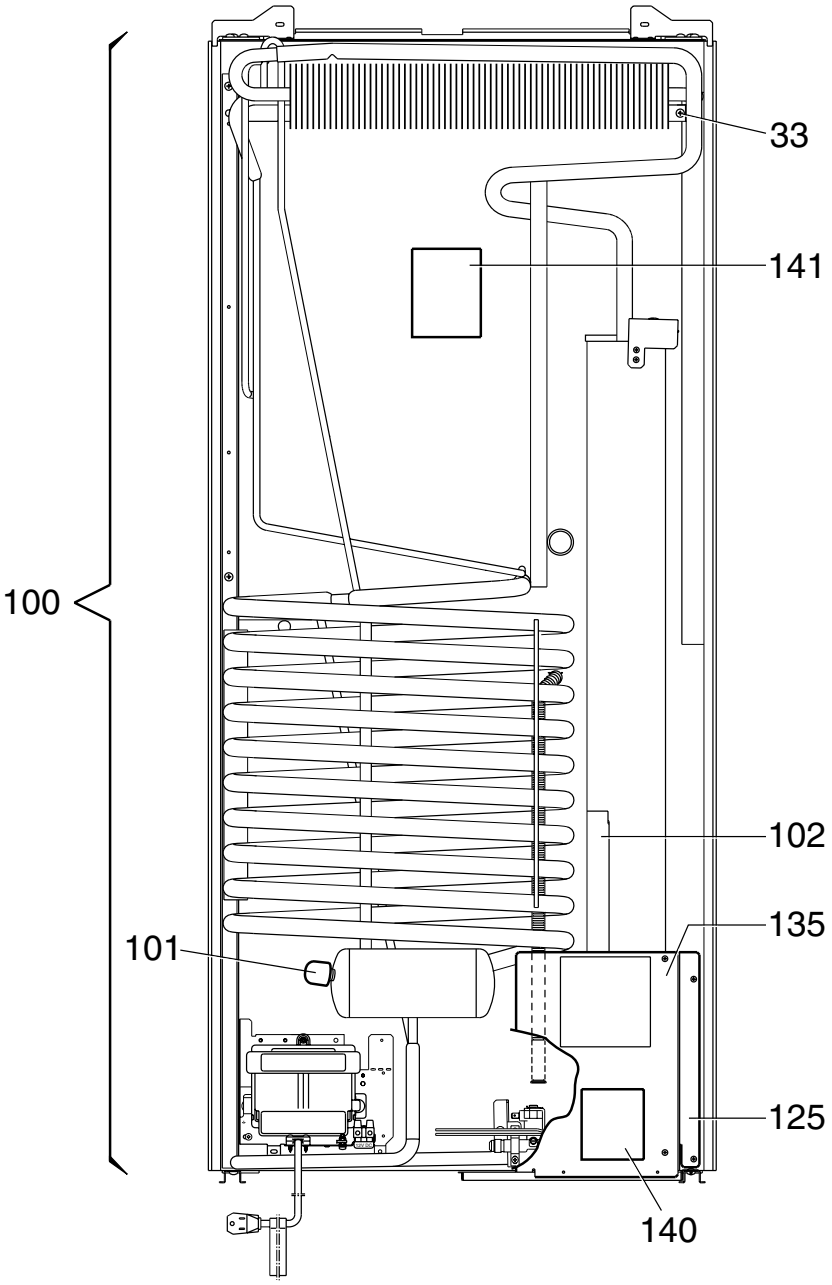

NCMOE2090218

Exploded view no.: NCMOE2090218
N00002090218

Matrix	PNC	ELC	ProdDate	Model
A	921596014	00	20061213	RM2820

Pos	Part No.	Matrix	Description
33	3858039096	A	Screw,zinc-plated,MRX M5X14
100	2934909108	A	Cooling unit,with,thermal fuse,909
101	173228008	A	Cap
102	2933557007	A	Cover sheet
125	2930784018	A	Protective plate
135	2930785015	A	Protective plate
140	3850582002	A	Label
141	3850583000	A	Label
999	8251203082	A	User manual
			not shown

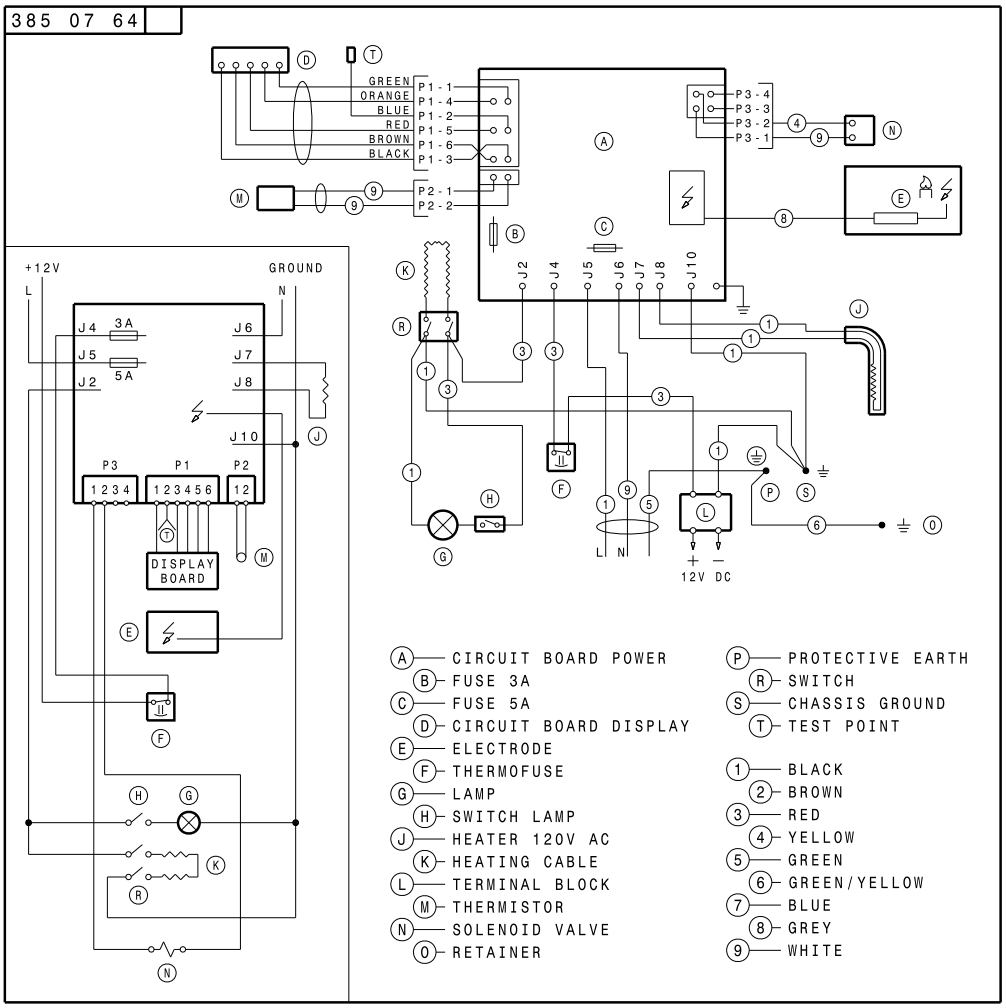
385 07 64
GREEN
ORANGE
BLUE
RED
BROWN
BLACK
P1-1
P1-4
P1-2
P1-5
P1-6
P1-3
P2-1
P2-2
P3-4
P3-3
P3-2
P3-1
J2
J4
J5
J6
J7
J8
J10
+12V
GROUND
L
N
3A
5A
P3
P1
P2
1 2 3 4
1 2 3 4 5 6
1 2
DISPLAY BOARD
L N
12V DC
A CIRCUIT BOARD POWER
B FUSE 3A
C FUSE 5A
D CIRCUIT BOARD DISPLAY
E ELECTRODE
F THERMOFUSE
G LAMP
H SWITCH LAMP
J HEATER 120V AC
K HEATING CABLE
L TERMINAL BLOCK
M THERMISTOR
N SOLENOID VALVE
O RETAINER
P PROTECTIVE EARTH
R SWITCH
S CHASSIS GROUND
T TEST POINT
1 BLACK
2 BROWN
3 RED
4 YELLOW
5 GREEN
6 GREEN/YELLOW
7 BLUE
8 GREY
9 WHITE