Dometic

When ordering parts, always state:
MODEL NO. - PRODUCT NO. - QUANTITY - PART NUMBER - DESCRIPTION
For Electric Details also state:
VOLTAGE - WATTAGE

USA
SERVICE OFFICE
Dometic, LLC
2320 Industrial Parkway
Elkhart, IN 46516
574-294-2511

CANADA
Dometic, LLC
46 Zatonski, Unit 3
Brantford, ON N3T 5L8
CANADA
519-720-9578

For Service Center Assistance Call:
800-544-4881

PARTS LIST For RM2551

Product Number	Model Number	Voltage	Refrigerator Frame Color	Door Style	Door Trim Color	Market	Brand
921142114	RM2551	120 VAC	Black	Standard	Black	USA/CAN	Dometic
921142115	RM2551	120 VAC	Black	Standard	Black	USA/CAN	Dometic

PARTS LIST

MODEL RM2551 Series

3311050.029

REVISION:
Form No. 3311050.029 7/08
(Replaces 3311050.011)

©2008 Dometic, LLC
LaGrange, IN 46761

ALPHABETICAL INDEX

	Page	Pos. No
Cabinet, exterior components	1-2	1-999
Control & Burner components	3-4	1-253
Cabinet, interior components	5-6	3-64
Door Asm.	7-8	1-20
Cabinet, rear view	9-10	100-999
Wiring Diagram	11	--

SPECIFICATIONS

PRODUCT NO.*	921142114 921142115
Energy Source **	120VAC/GAS
AC Heating Element	
Watts	175
Ohms	80
Amperage	1.5
BTU's Gas Burner	1080
Jet Size	# 43
Flue Baffle	
Size	3-15/16" x 25/32"
Position Above Burner	1-15/32"
Ice Trays	0
Crispers	1
Bottle Holders	0

* Product number located on refrigerator data plate.
** 12 volt DC power is required to operate the refrigerator controls on all models.

527882T1

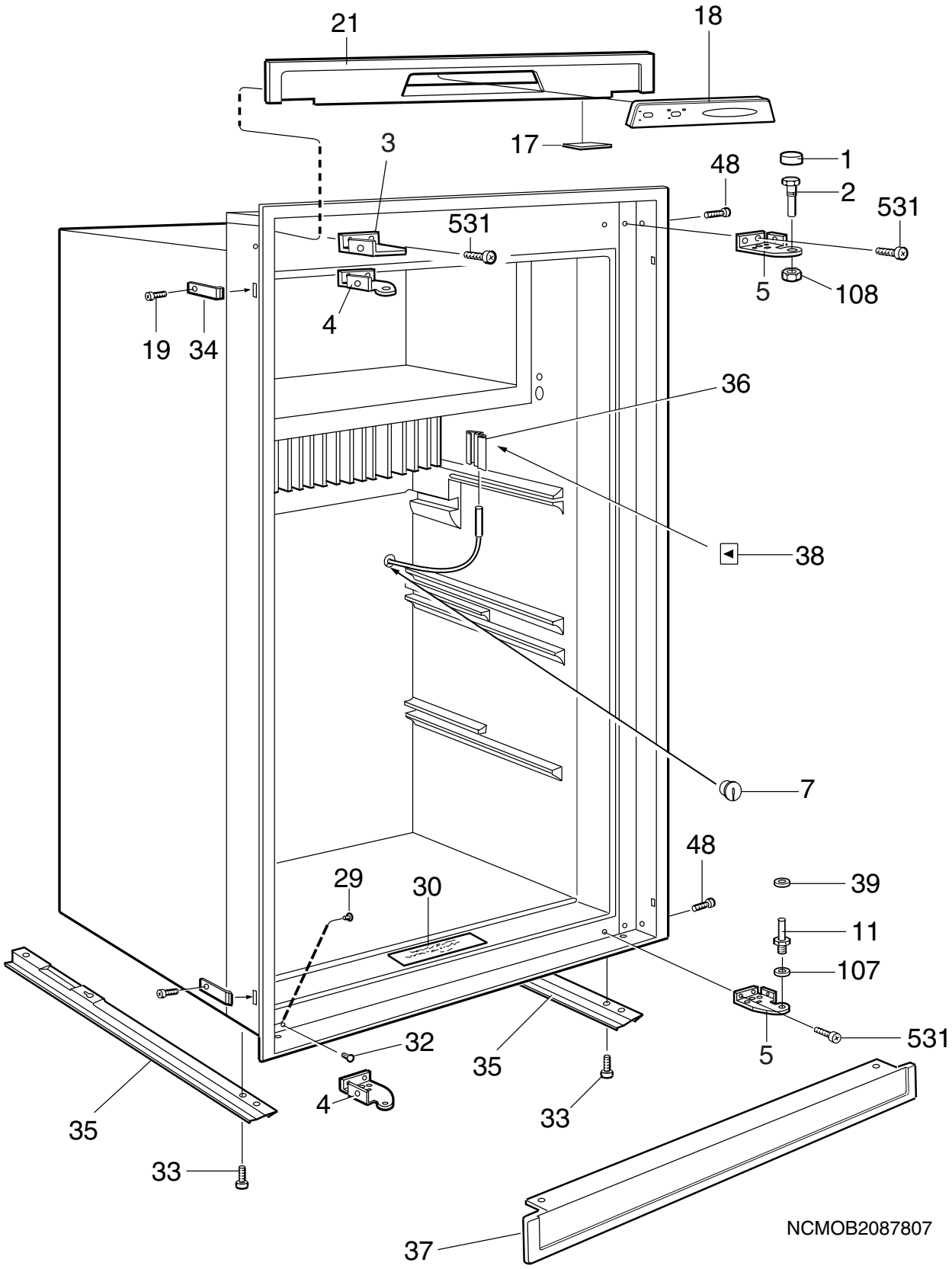
21
18
17
3
48
1
2
531
531
5
108
4
19
34
36
38
7
48
39
29
30
11
107
531
5
32
35
4
33
35
33
37
NCMOB2087807

Exploded view no.: NCMOB2087807
N00002087807

Matrix	PNC	ELC	ProdDate	Model
A	921142114	00	20060515	RM2551
B	921142115	00	20060516	RM2551

Pos	Part No.	Matrix	Description
1	2932736081	A B	Cover,black
2	2932647015	A B	Hinge pin,upper
3	2932644046	A -	Bracket,right,black
3	2932644038	- B	Bracket,left,black
4	2932643048	A -	Hinge,black
5	2932643030	- B	Hinge,black
7	2002301006	A B	Cover
11	2932649011	A B	Hinge pin,lower
17	2932330018	A B	Covering washer
18	2932771021	A B	Panel,display board,black
19	3858002052	A B	Screw,zinc-plated,RXS B6X6,5
21	2932641034	A B	Front,black
29	2930740077	A B	Cover,black
30	2932776004	A B	Instruction plate
32	3850585039	A B	Plug,black
33	3858039096	A B	Screw,zinc-plated,MRX M5X14
34	2932855014	A B	Fastening bow
35	2932660018	A B	Rail
36	3851088017	A B	Bracket,thermistor
37	2932690049	A B	Base cover,black
38	2933180016	A B	Label
39	3858010022	A B	Washer,black,5,5X12X1
48	3858004058	A B	Screw,zinc-plated,MRX M4X4
107	3858010113	A B	Washer,zinc-plated,BRB 6,4X12,5
108	3858009057	A B	Nut,black,ML6 M6
531	3858039047	A B	Screw,zinc-plated,MRX M4X10
999	2932750140	A -	Door reversing kit,left-right,black not shown
999	2932750132	- B	Door reversing kit,right-left,black not shown

© Dometic

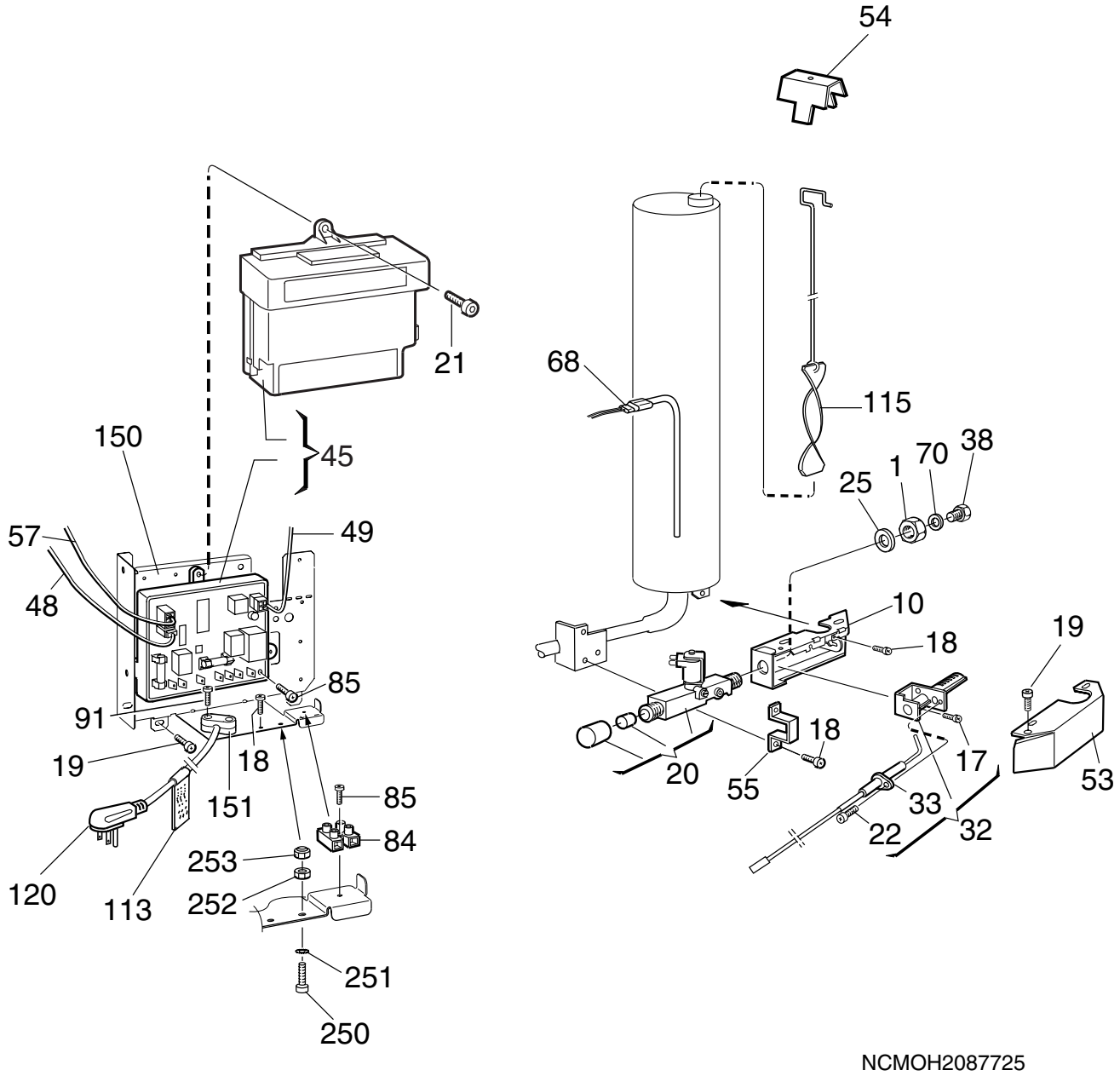

NCMOH2087725

Exploded view no.: NCMOH2087725
N00002087809

Matrix	PNC	ELC	ProdDate	Model
A	921142114	00	20060515	RM2551
B	921142115	00	20060516	RM2551

Pos	Part No.	Matrix	Description
1	140207044	A B	Nut
10	2932603018	A B	Burner housing
17	3858039039	A B	Screw,zinc-plated,MRX M4X8
18	3858039047	A B	Screw,zinc-plated,MRX M4X10
19	3858002144	A B	Screw,zinc-plated,RXS B6X9,5
20	2932615012	A B	Solenoid valve
21	3858002151	A B	Screw,zinc-plated,RXS B6X13
22	3858005014	A B	Screw,zinc-plated,RXK B6X9,5
25	3858010071	A B	Washer,12,5X18,5X1
32	2930697079	A B	Burner,with,conductor
33	2932781012	A B	Electrode,with,conductor
38	2007419167	A B	Jet,43
45	3850712013	A B	Power,module,integrated
48	3851059034	A B	Conductor,thermistor
49	2954539041	A B	Conductor,solenoid valve
53	2932661016	A B	Cover
54	2930402009	A B	Flue top
55	2932662014	A B	Bracket
57	2954542060	A B	Conductor,PCB
68	3850644455	A B	Heater,175W, 120V
70	2007457001	A B	Washer,0,5mm
84	3858022019	A B	Terminal block
85	3858002185	A B	Screw,zinc-plated,RXS B6X25
91	3858002177	A B	Screw,zinc-plated,RXS B6X19
113	2932733005	A B	Label
115	2932667021	A B	Flue baffle
120	2002699094	A B	Cord set
150	3850337019	A B	Bracket
151	561014010	A B	Cable clamp
250	3858004033	A B	Screw,zinc-plated,MRX M4X16
251	3858011012	A B	Lock washer,zinc-plated,4,3X8
252	3858009016	A B	Hexagon nut,zinc-plated,M4X3,2
253	3858028024	A B	Lock nut,zinc-plated,M4

© Dometic

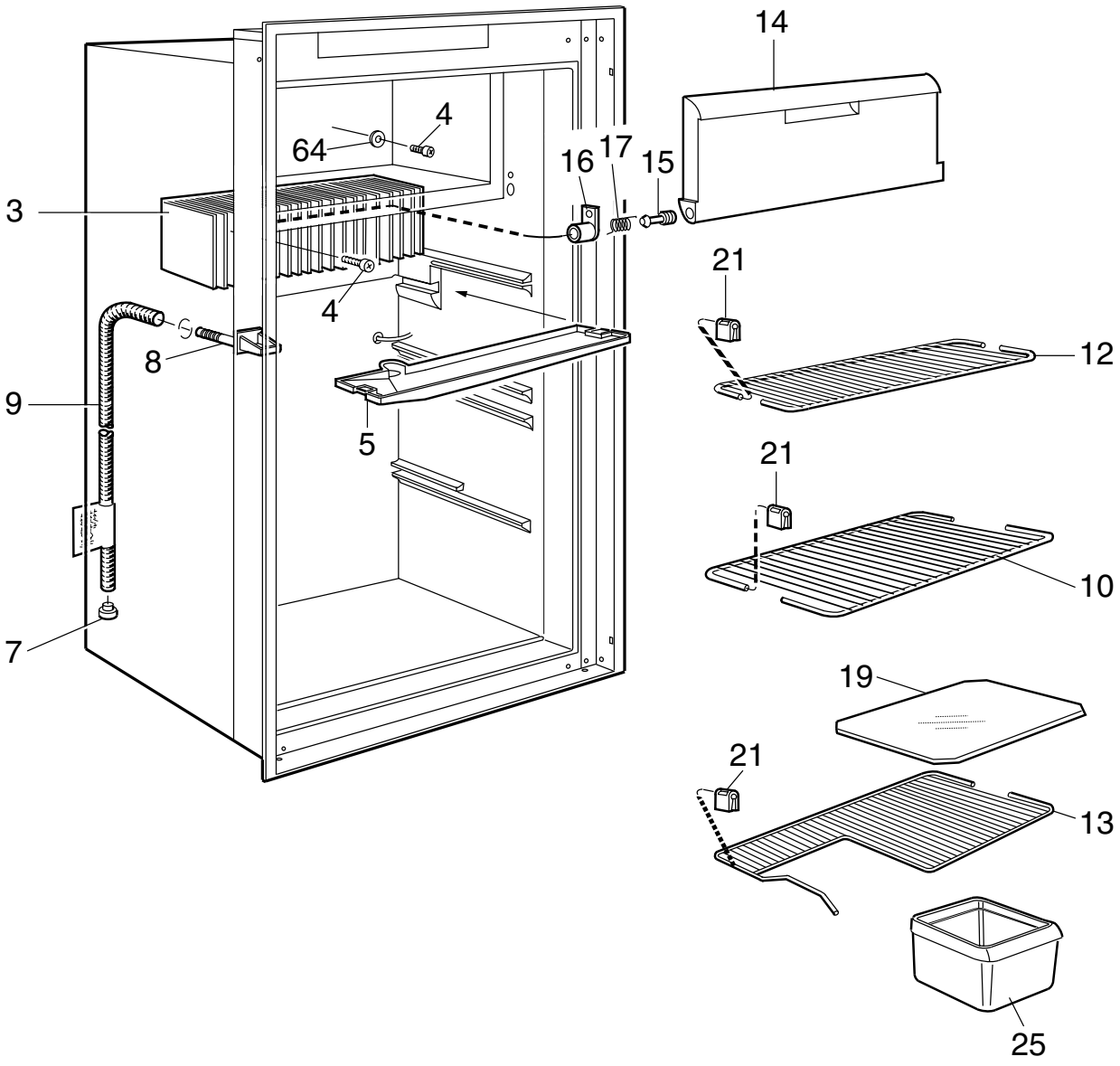

NCMOD2087826

Exploded view no.: NCMOD2087826
N00002087810

Matrix	PNC	ELC	ProdDate	Model
A	921142114	00	20060515	RM2551
B	921142115	00	20060516	RM2551

Pos	Part No.	Matrix	Description
3	2932629013	A B	Cooling flange
4	3858036019	A B	Screw,zinc-plated,KFXS B10X38
5	2932623016	A B	Evaporation tray
7	2932115013	A B	Discharge pipe,plug
8	2932635010	A B	Drain
9	2932749019	A B	Drain hose,L=1375mm
10	2932625029	A B	Grating shelf
12	2932625060	A B	Grating shelf
13	2932626142	A B	Grating shelf
14	2932650019	A B	Flap freezer-
15	2002238000	A B	Bolt
16	2002236004	A B	Spring casing,left
16	2002236012	A B	Spring casing,right
17	2932754019	A B	Spring,left
17	2932754027	A B	Spring,right
19	2931117093	A B	Shelf,plastic
			Up to serial no. 82299999
19	3851429021	A B	Shelf,plastic,white
			From serial no. 82300001
21	2932668011	A B	Shelf lock
25	2932621010	A B	Vegetable box,white
64	3858010147	A B	Washer,aluminium,5.2x22x1.5

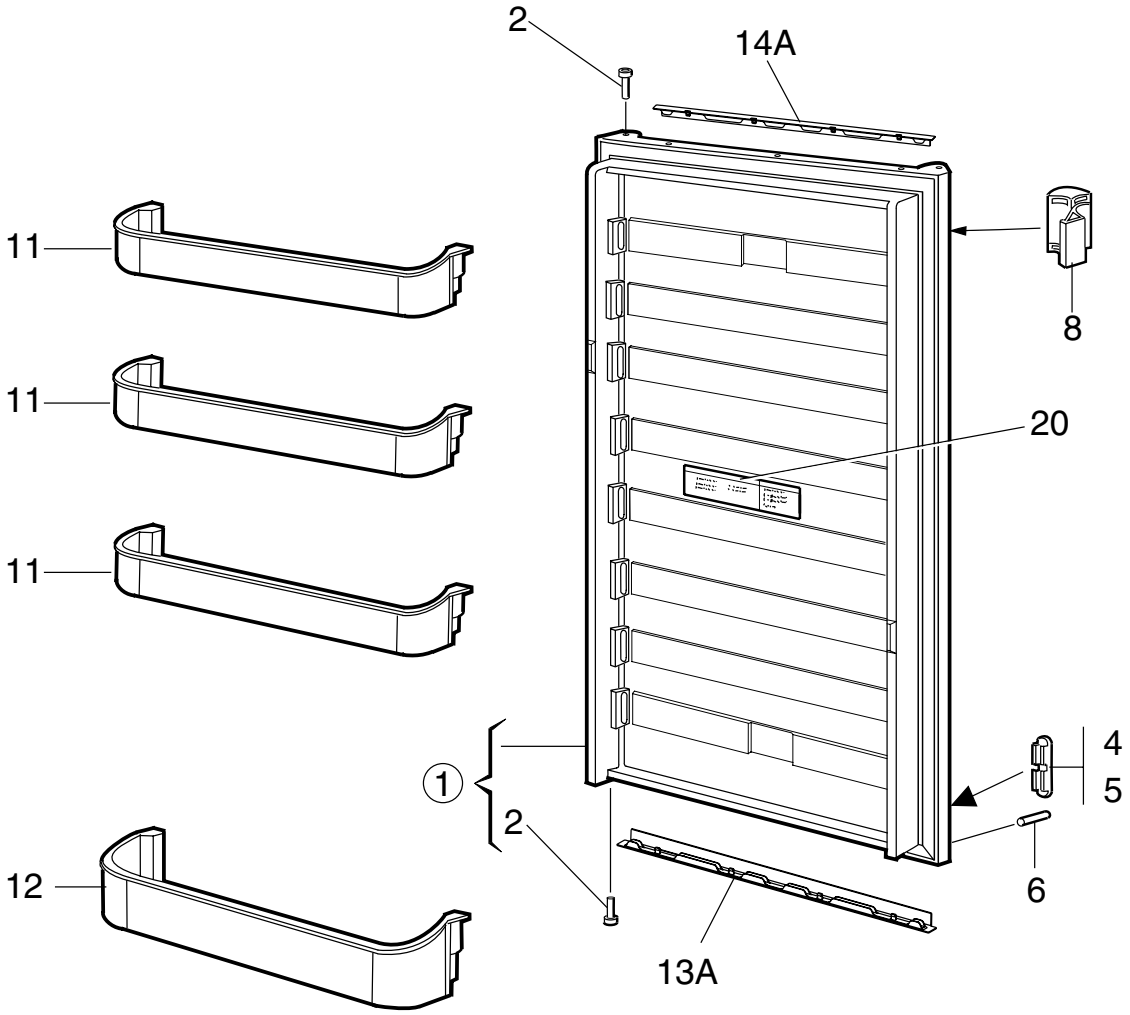

NCMOA2087827

Exploded view no.: NCMOA2087827
N00002087811

Matrix	PNC	ELC	ProdDate	Model
A	921142114	00	20060515	RM2551
B	921142115	00	20060516	RM2551

Pos	Part No.	Matrix	Description
1	2932562131	A B	Refrigerator door,black
2	2931171066	A B	Hinge bushing,black
4	2932682038	- B	Plug,upper right,lower left
5	2932682046	A -	Plug,upper left,lower right
6	2932588011	A B	Stopper
8	2932670025	A B	Handle,black
11	2932576016	A B	Door shelf
12	2932575018	A B	Bottle shelf
13A	3850919022	A B	Decoration strip,black
14A	3850919063	A B	Decoration strip,black
20	3851235006	A B	Label

© Dometic

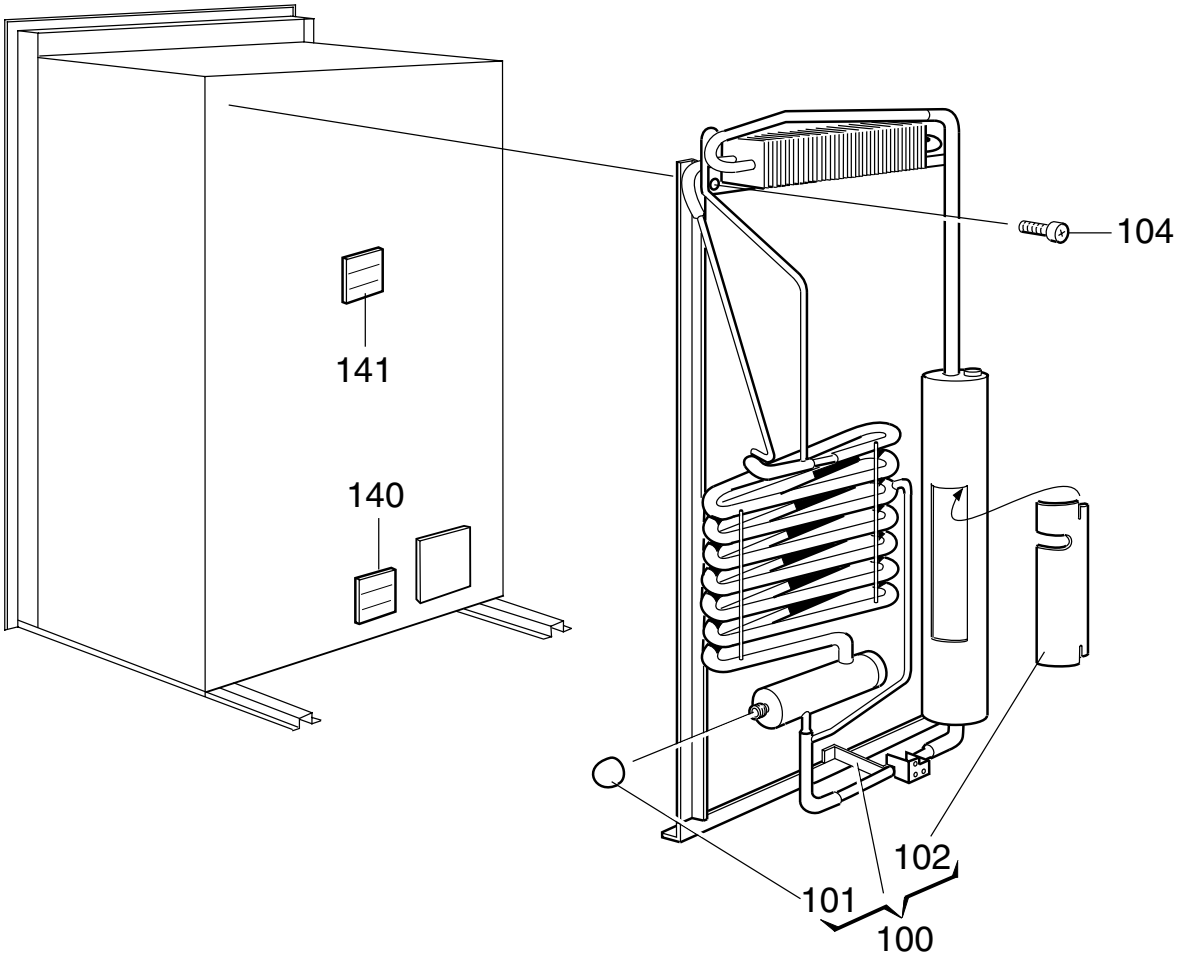

NCMOE2079611

Exploded view no.: NCMOE2079611
N00002087812

Matrix	PNC	ELC	ProdDate	Model
A	921142114	00	20060515	RM2551
B	921142115	00	20060516	RM2551

Pos	Part No.	Matrix	Description
100	2934509098	A B	Cooling unit,509
101	173228008	A B	Cap
102	2933557007	A B	Cover sheet
104	3858068012	A B	Screw,DK 4.8X16
140	3850582002	A B	Label
141	3850583000	A B	Label
999	8251293000	A B	User manual
			not shown

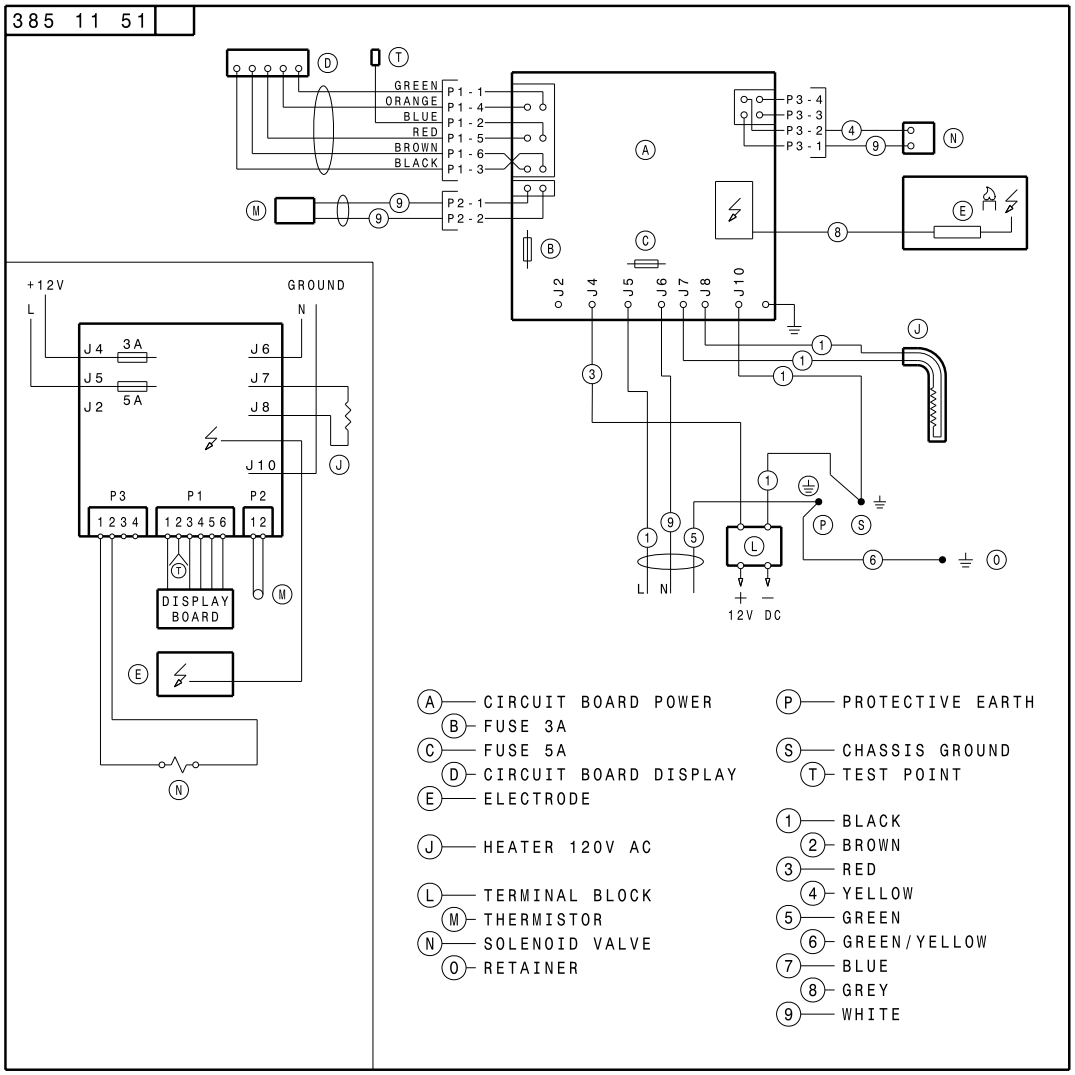
385 11 51
GREEN
ORANGE
BLUE
RED
BROWN
BLACK
P1 - 1
P1 - 4
P1 - 2
P1 - 5
P1 - 6
P1 - 3
P2 - 1
P2 - 2
P3 - 4
P3 - 3
P3 - 2
P3 - 1
J2
J4
J5
J6
J7
J8
J10
+12V
GROUND
L
N
3A
5A
P3
P1
P2
1 2 3 4
1 2 3 4 5 6
1 2
DISPLAY BOARD
L N
12V DC
A CIRCUIT BOARD POWER
B FUSE 3A
C FUSE 5A
D CIRCUIT BOARD DISPLAY
E ELECTRODE
J HEATER 120V AC
L TERMINAL BLOCK
M THERMISTOR
N SOLENOID VALVE
O RETAINER
P PROTECTIVE EARTH
S CHASSIS GROUND
T TEST POINT
1 BLACK
2 BROWN
3 RED
4 YELLOW
5 GREEN
6 GREEN/YELLOW
7 BLUE
8 GREY
9 WHITE

N38511510