Dometic® The Sign of Comfort

When ordering parts, always state:
MODEL NO. - PRODUCT NO. - QUANTITY - PART NUMBER - DESCRIPTION
For Electric Details also state:
VOLTAGE - WATTAGE

REFRIGERATOR MODEL RM2454

SERVICE OFFICE
USA
Dometic Corporation
2320 Industrial Parkway
Elkhart, IN 46516
574-294-8665

CANADA
Dometic Corporation
46 Zatonski, Unit 3
Brantford, ON N3T 5L8
CANADA
519-720-9578

For Technical Assistance Call:
800-216-5115

Product Number	Model	Voltage	Refrigerator Frame Color	Door Style	Door/Door Trim Color	Market	Brand
921140127	RM2454	120	Black	Standard-LH	Black	USA-CAN	Dometic
921140128	RM2454	120	Black	Standard-RH	Black	USA-CAN	Dometic

PARTS LIST

MODEL RM2454 Series

Form No.3311049.000 9/06

©2006 Dometic Corporation
LaGrange, IN 46761

ALPHABETICAL INDEX

	Page#	Index#
Cabinet, Exterior Components	5-6	1-999
Cabinet, Interior Components	7-8	3-21
Cabinet, Rear View	11-12	100-999
Control & Burner Components	9-10	1-251
Door Assm.	3-4	1-20
Wiring Diagram	13	—

SPECIFICATIONS

Model	
Product Number*	921140127 921140128
Energy Source**	120VAC,12VDC,Gas
AC Heating Element	
Amperage	1.5
Ohm Resis. +/— 10%	80
Wattage	175W
DC Heating Element	
Amperage	15.0
Ohms Resis +/— 10%	0.8
Wattage	175W
BTU's Gas Burner	1080
Jet Size	#43
Flue Baffle	
Size	3-15/16" x 25/32"
Position Above Burner	1-15/32"
Ice Trays	0
Crispers	1
Bottle Holders	0

* Product number located on refrigerator data plate.

** 12 volt DC power is required to operate the refrigerator controls on all models.

DOOR ASSEMBLY

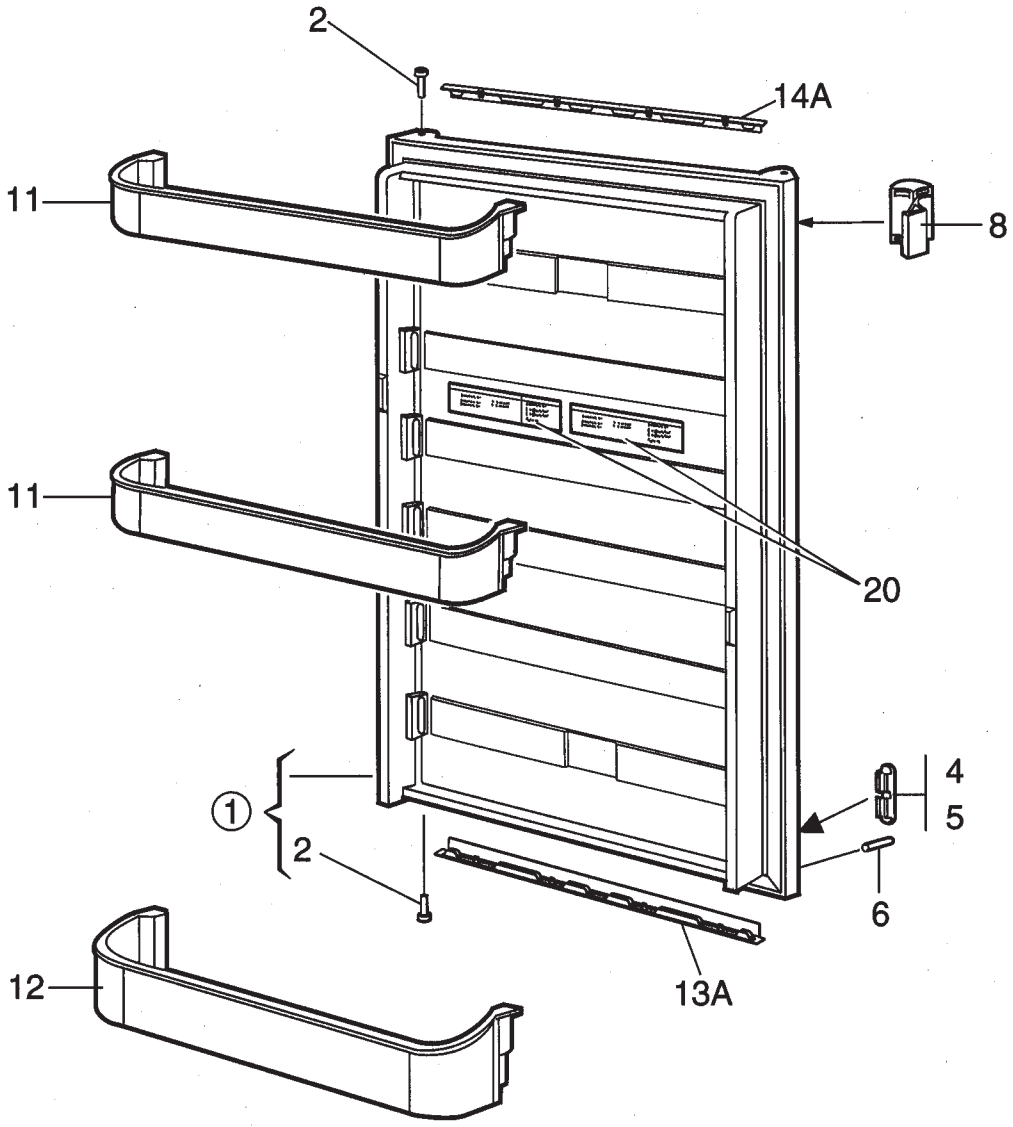

NCMOA2087721

DOOR ASSEMBLY

Model RM2454 Prod # 921140127 = A
Model RM2454 Prod # 921140128 = B

Index No.	Part No.	A	B	Description
1	2932563139	A	B	Door, Refrigerator, Black
2	2931171066	A	B	Bushing, Hinge, Black
4	2932682038	A	--	Plug, Upper-RH, Lower RH
5	2932682046	--	B	Plug, Upper LH, Lower LH
6	2932588011	A	B	Pin, Door Panel Stop
8	2932670025	A	B	Handle, Black
11	2932576016	A	B	Shelf, Door
12	2932575018	A	B	Shelf, Bottle
13A	3850919022	A	B	Strip, Decoration, Black
14A	3850919063	A	B	Strip, Decoration, Black
20	2932722008	A	B	Decal
	3850581004	A	B	Decal (French)

CABINET, EXTERIOR COMPONENTS

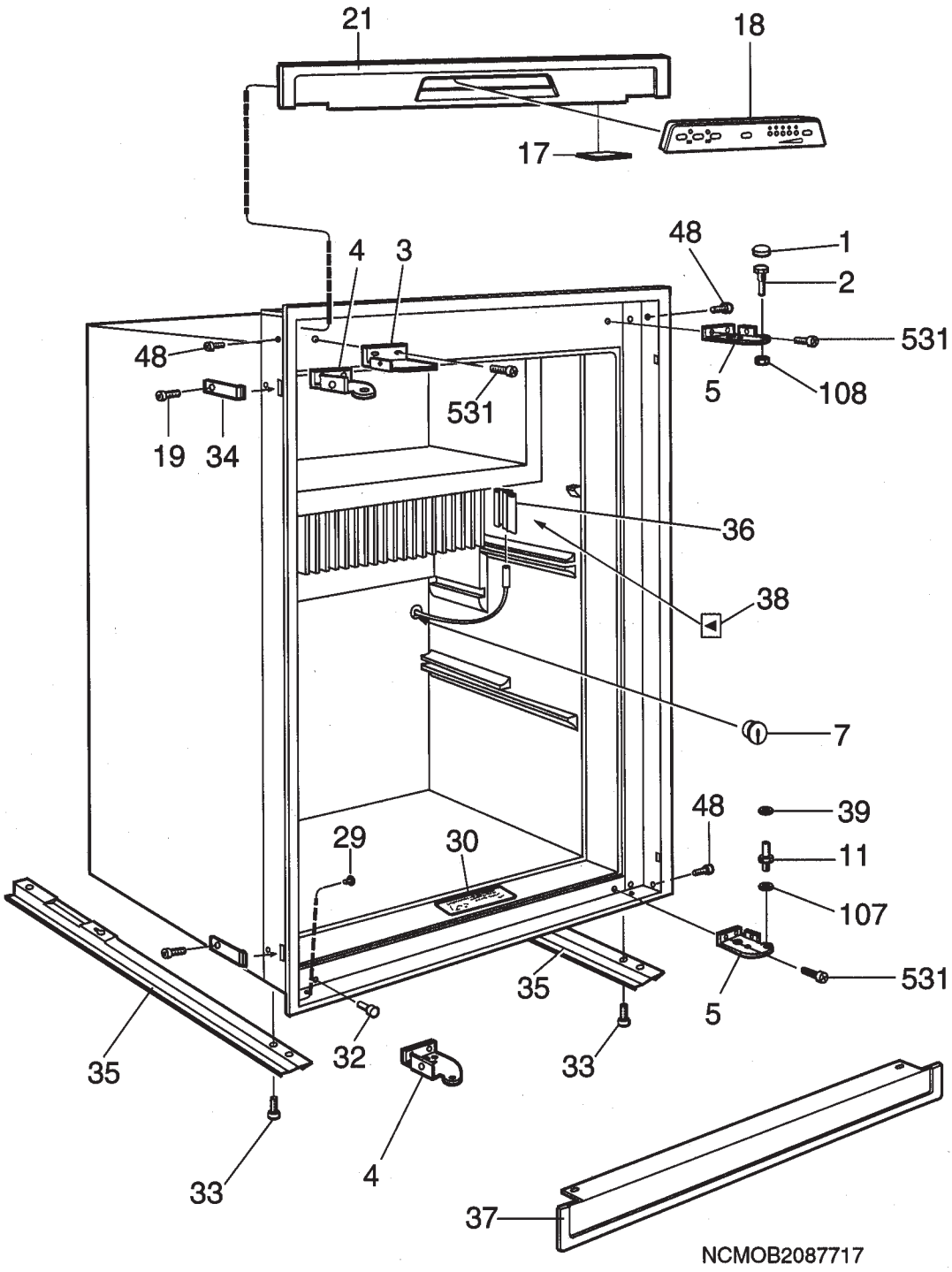

CABINET, EXTERIOR COMPONENTS

Model RM2454 Prod # 921140127 = A
Model RM2454 Prod # 921140128 = B

Index No.	Part No.	Model	Description
1	2932736081	A B	Cover, Black
2	2932647015	A B	Pin, Hinge, Upper
3	2932644046	A --	Bracket, RH, Black
	2932644038	-- B	Bracket, LH, Black
4	2932643048	A --	Hinge, Black
5	2932643030	-- B	Hinge, Black
7	2002301006	A B	Cover
11	2932649011	A B	Pin, Lower Hinge
17	2932330018	A B	Covering,Washer
18	2932884071	A B	Panel, Display, Black
19	3858002052	A B	Screw, RXS B6x6.5 Zinc
21	2932641034	A B	Front, Top, Black
29	2930740077	A B	Plug, Black
30	2932436005	A B	Decal
32	3850585039	A B	Plug, Black
33	3858039096	A B	Screw MRX M5X14
34	2932855014	A B	Latch Clip
35	2932660018	A B	Runner
36	3851088017	A B	Bracket, Thermistor
37	2932690049	A B	Cover, Lower Front, Black
38	2933180016	A B	Label
39	3858010022	A B	Washer, 535x12x1, Black
48	3858004058	A B	ScrewMRX M4X4 Zinc
107	3858010113	A B	Washer BRB 6.4x12.5 Zinc
108	3858009057	A B	Nut,ML6 M6, Black
531	3858039047	A B	Screw, MRX M4x10 Zinc
999	2932750140	A --	Door Reversal Kit LH to RH, Black
	2932750132	-- B	Door Reversal Kit RH to LH, Black

CABINET, INTERIOR COMPONENTS

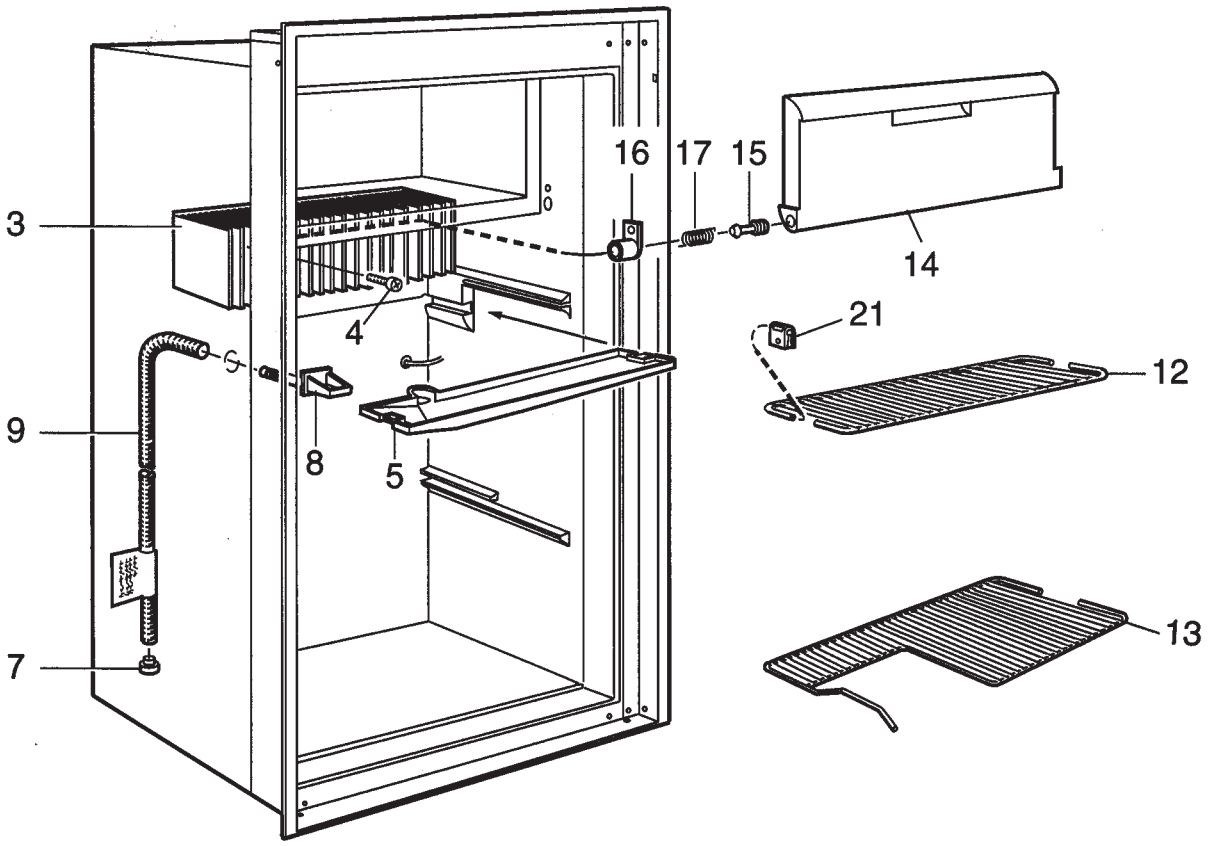

NCMOD2054719

CABINET, INTERIOR COMPONENTS

Model RM2454 Prod # 921140127 = A
Model RM2454 Prod # 921140128 = B

Index No.	Part No.	Model	Description
3	2932628015	A B	Fin, Cooling
4	3858036019	A B	Screw, KFXS B10x38 Zinc
5	2932623016	A B	Tray, Condensate
7	2932115013	A B	Pipe, Discharge
8	2932635010	A B	Drain
9	2932749019	A B	Hose, Drain
12	2932625060	A B	Shelf
13	2932626142	A B	Shelf
14	2932650019	A B	Door, Freezer
15	2002238000	A B	Carrier, Spring
16	2002236004	A B	Spring Casing LH
	2002236012	A B	Spring, Casing RH
17	2932754019	A B	Spring, LH
18	2932754027	A B	Spring, RH
21	2932668011	A B	Lock, Shelf

CONTROL & BURNER COMPONENTS

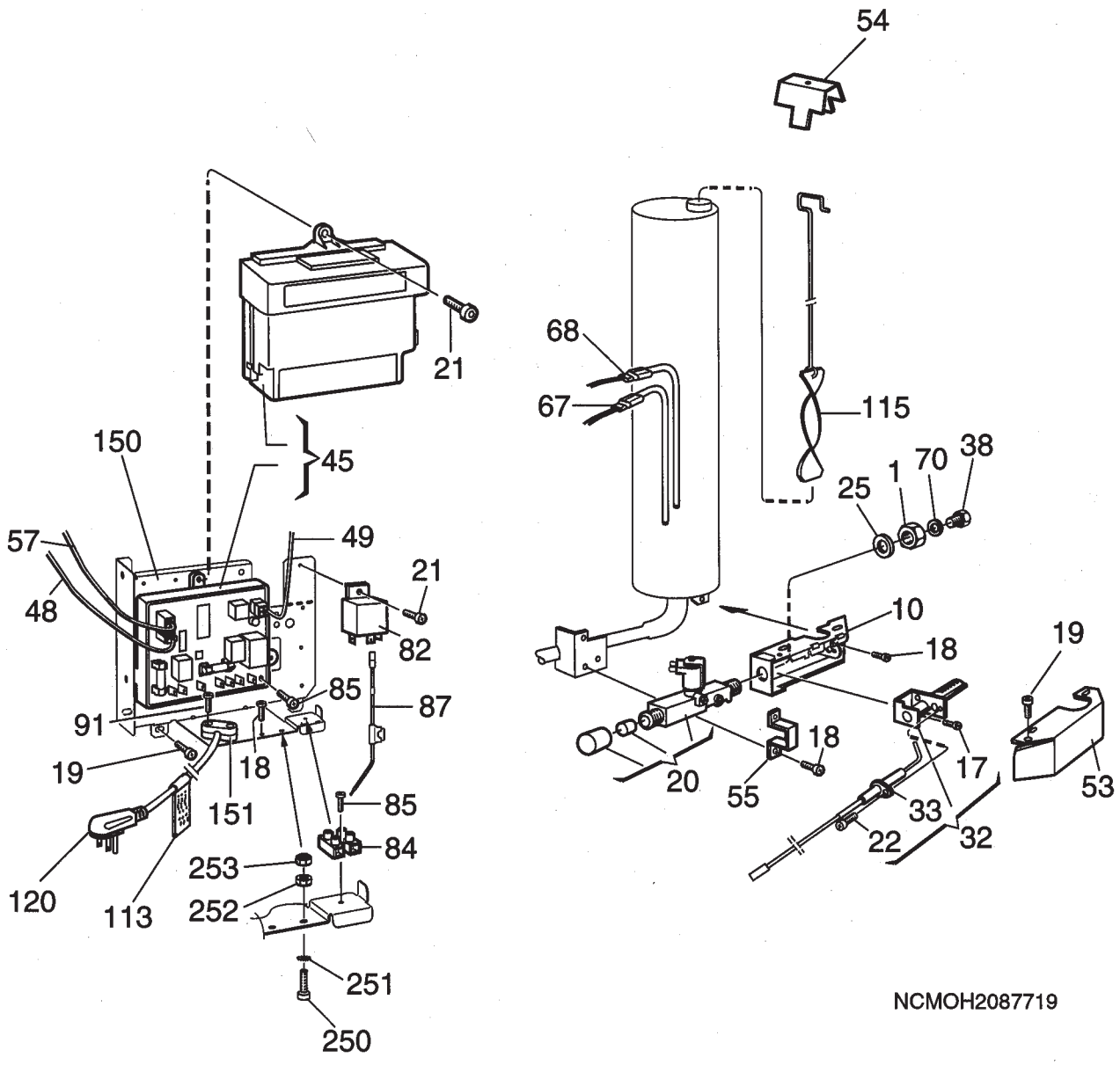

CONTROL & BURNER COMPONENTS

Model RM2454 Prod # 921140127 = A
Model RM2454 Prod # 921140128 = B

Index No.	Part No.	Model	Description
1	0140207044	A B	Nut
10	2932603018	A B	Housing, Burner
17	3858039039	A B	Screw, MRX M4x8 Zinc
18	3858039047	A B	Screw, MRX M4x10 Zinc
19	3858002144	A B	Screw, RXS B6x13 Zinc
20	2932615012	A B	Valve, Gas Solenoid
21	3858002151	A B	Screw, RXS B6x13 Zinc
22	3858005014	A B	Screw, RXK B6x9.5 Zinc
25	3858010071	A B	Washer, 12.5x18.5x1
32	2930697079	A B	Burner
33	2932781012	A B	Electrode
38	2007419167	A B	Jet #43
45	3850712013	A B	Power Module
48	3851059034	A B	Conductor Thermistor
49	2954540049	A B	Conductor Solenoid Valve
53	2932661016	A B	Cover
54	2930402009	A B	Cap, Flue
55	2932662014	A B	Bracket
57	2954542060	A B	Conductor, PCB
67	3850646054	A B	Heater, 175W 12VDC
68	3850644455	A B	Heater 175W, 120VAC
70	2007457001	A B	Washer, 0.5mm
82	2930385006	A B	Relay
84	3858022019	A B	Terminal Block
85	3858002185	A B	Screw, RXS B6x25 Zinc
87	2954553018	A B	Wire, W/Fuse
91	3858002177	A B	Screw, RXS B6x19 Zinc
113	2932733005	A B	Decal
115	2932667013	A B	Baffle, Flue
120	2002699094	A B	Cord
150	3850337019	A B	Bracket
151	0561014010	A B	Strain Relief
250	3858004033	A B	Screw, MRX M4X16
251	3858011012	A B	Lock Washer
252	3858009016	A B	Nut, Hex
253	3858028024	A B	Nut, Lock

CABINET, REAR VIEW

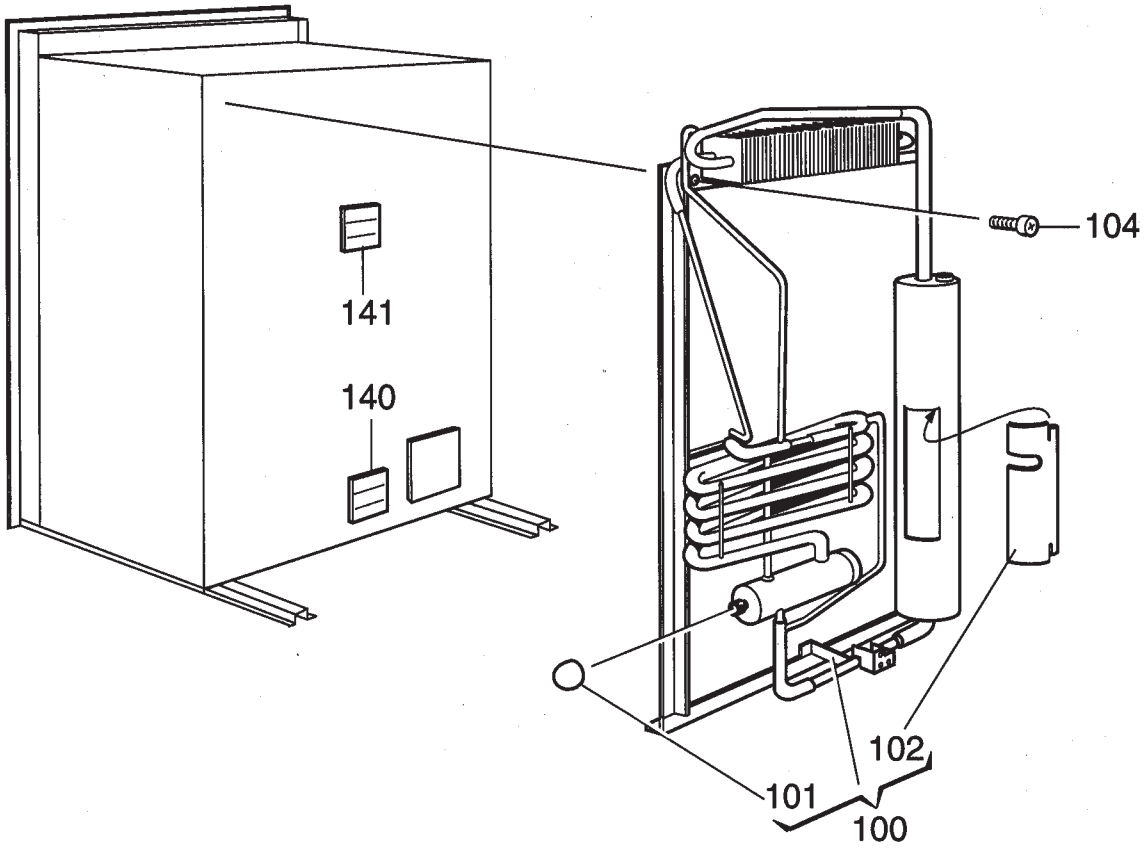

NCMOE2079590

CABINET, REAR VIEW

Model RM2454 Prod # 921140127 = A
Model RM2454 Prod # 921140128 = B

Index No.	Part No.	Model	Description
100	2934409091	A B	Cooling Unit, Type 409
101	0173228008	A B	Cap
102	2933557007	A B	Cover
104	3858068012	A B	Screw
140	3850582002	A B	Decal
141	3850583000	A B	Decal

WIRING DIAGRAM

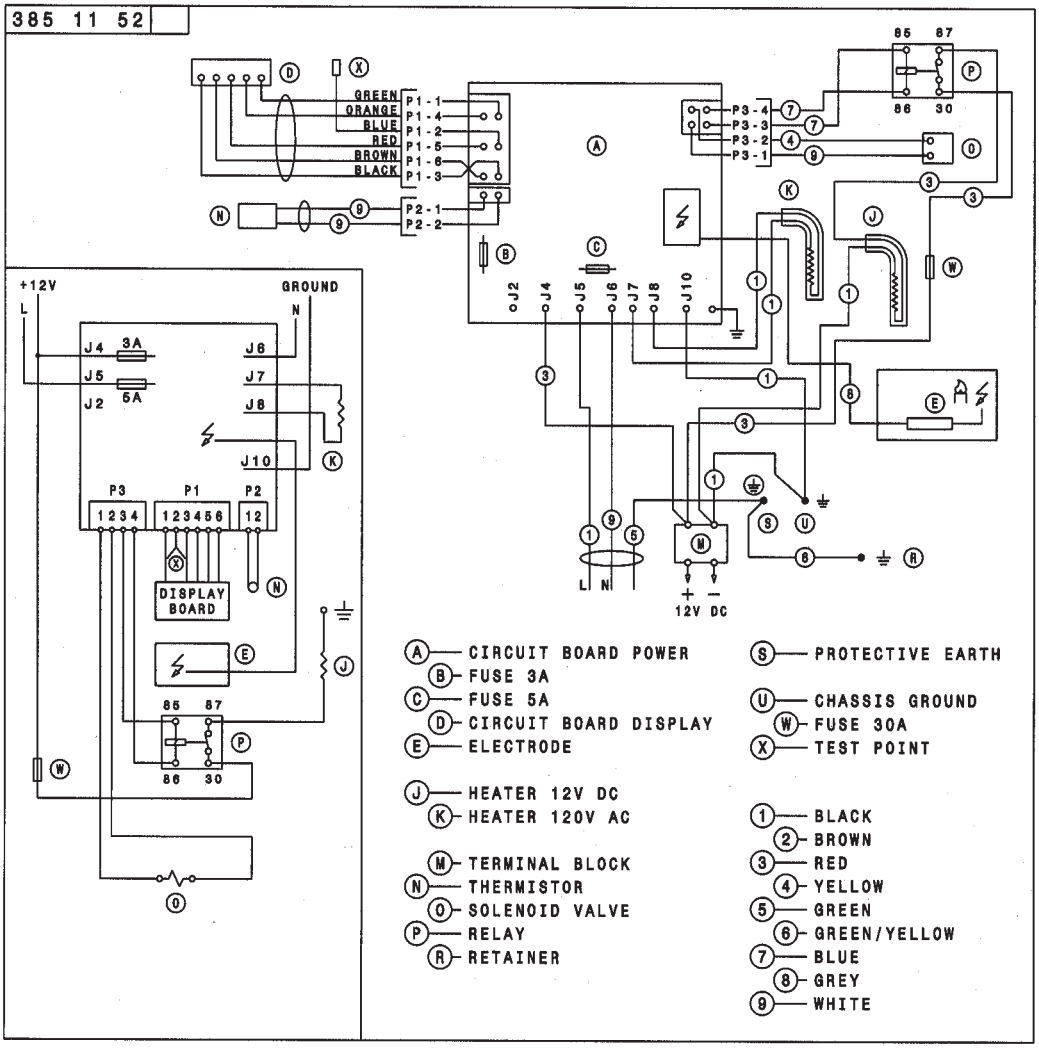

N38511520