Dometic®

When ordering parts, always state:
MODEL NO. - PRODUCT NO. - QUANTITY - PART NUMBER - DESCRIPTION
For Electric Details also state:
VOLTAGE - WATTAGE

NEW DIMENSIONS™

REFRIGERATOR PARTS LIST
MODEL NDR1292

USA
SERVICE OFFICE
Dometic Corporation
2320 Industrial Parkway
Elkhart, IN 46516
574-294-2511

CANADA
Dometic Corporation
46 Zatonski, Unit 3
Brantford, ON N3T 5L8
CANADA
519-720-9578

For Service Center Assistance Call:
800-544-4881

Product Number	Model Number	Voltage	Refrig. Frame Color	Door Style	Door/Door Trim Color	Market	Brand
921148110	NDR1292	120VAC	Black	Surround	Stainless	USA, Can	Dometic

PARTS LIST

MODEL
NDR1292
Series

Form No. 3309888.000 5/05

©2005 Dometic Corporation

LaGrange, IN 46761

ALPHABETICAL INDEX

	Page#	Index#
Cabinet, Exterior Components	5-6	2-108
Cabinet, Interior Components	7-8	3-112
Cabinet, Rear View	11-12	100-141
Control & Burner Components	9-10	1-152
Door Assm.	3-4	1-50
Wiring Diagram	13	—

SPECIFICATIONS

Model	**NDR1292**
Product Number*	921148110
Energy Source**	120 VAC, Gas
AC Heating Element	
Amperage	1.75 each
Ohm Resis. +/— 10%	69 each
Wattage	210 each
BTU's Gas Burner	2080
Jet Size	76
Flue Baffle	
Size	6" x 15/16"
Position Above Burner	1-1/4"
Ice Trays	0
Crispers	3
Bottle Holders	2
Climate Control Heater	
Watts	6
Ohms	24
Amperage	0.5

* Product number located on refrigerator data plate.

** 12 volt DC power is required to operate the refrigerator controls on all models.

DOOR ASSEMBLY

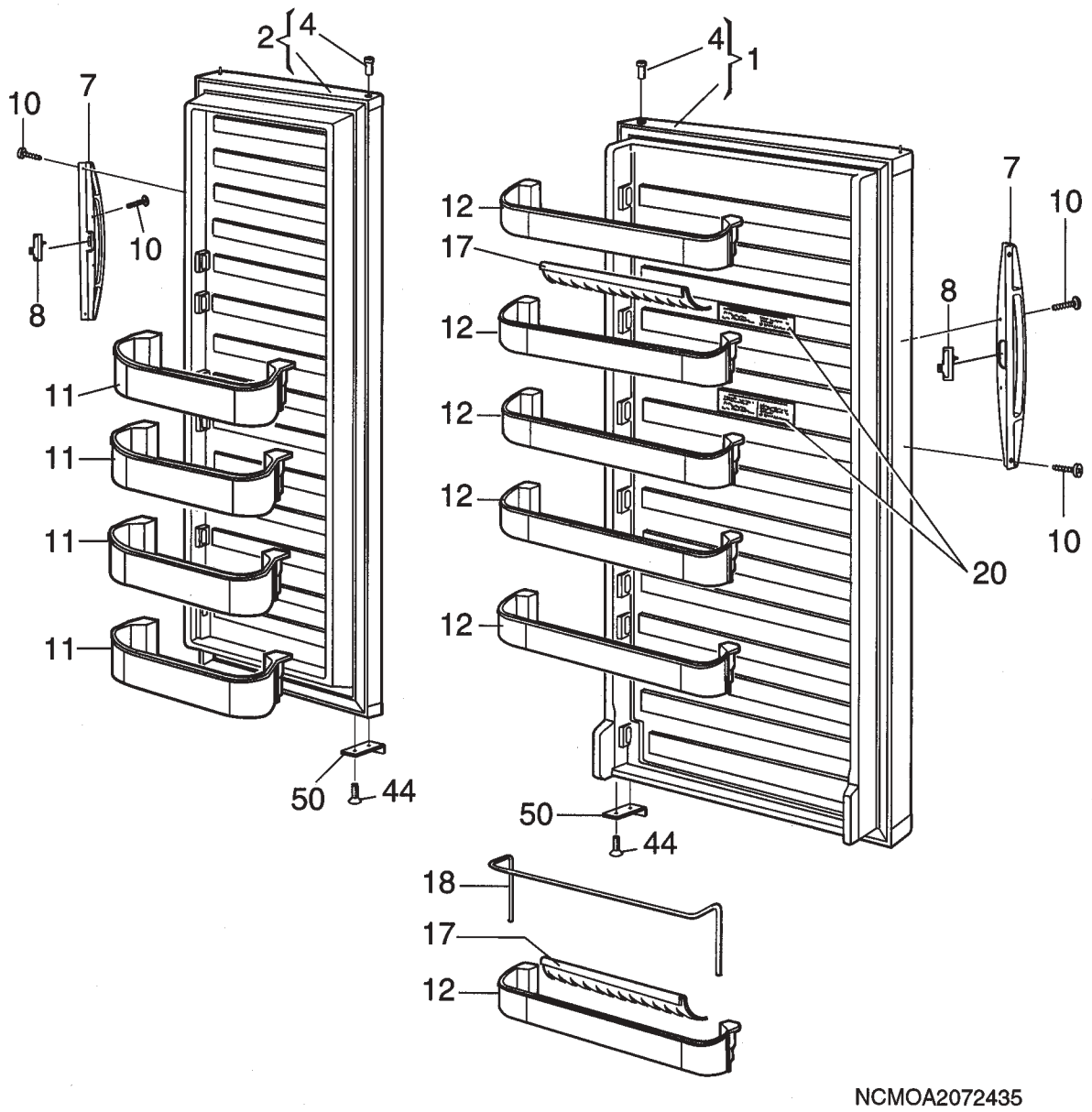

Only Those Parts Identified With An Index Number Are Available For Service Replacement.

DOOR ASSEMBLY

NDR1292 921148110 = A

Index No.	Part No.	A	Description
1	3850407077	A	Refrigerator Door, Stainless
2	3850406079	A	Freezer Door, Stainless
4	3850386016	A	Hinge Bushing, Black
7	3850383013	A	Handle, Black
8	3850384011	A	Control Knob, Black
9	3858040029	A	Screw, ELM 5x10, Black
11	2932577022	A	Door Shelf
12	2932583038	A	Door Shelf
17	2932658012	A	Bottle Holder
18	2932585041	A	Rack
20	2932722008	A	Label
	3850581004	A	Label, French
44	3858056041	A	Screw, MFX M4x12 Black
50	3850775010	A	Door Stop

Only Those Parts Identified With An Index Number Are Available For Service Replacement.

CABINET, EXTERIOR COMPONENTS

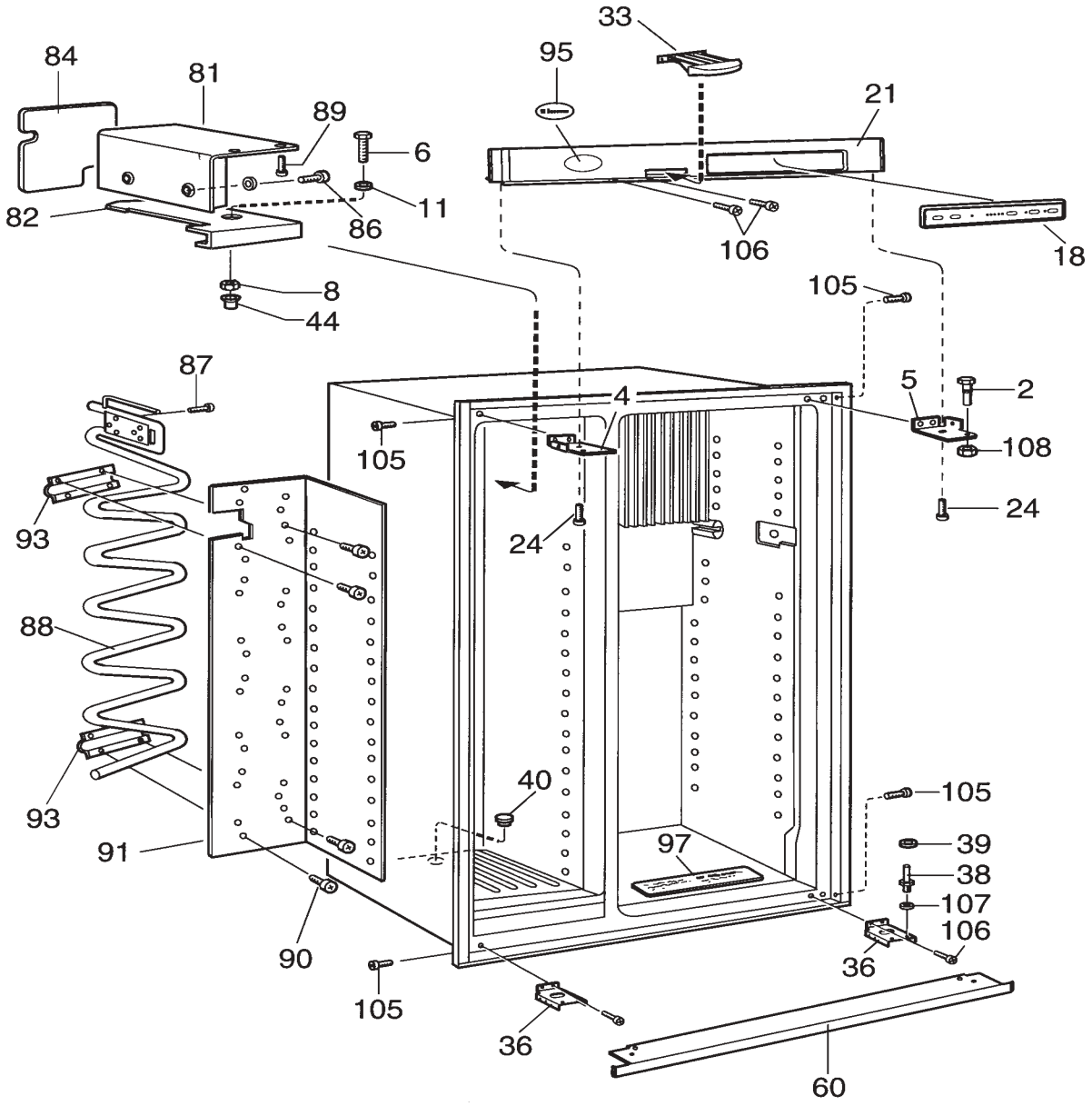

NCMOB2053925

Only Those Parts Identified With An Index Number Are Available For Service Replacement.

CABINET, EXTERIOR COMPONENTS

NDR1292 921148110 = A

Index No.	Part No.	A	Description
2	3850400015	A	Hinge Pin, Upper
4	3850398011	A	Hinge, Upper, Black
5	3850398029	A	Hinge, Upper, Black
6	3858041035	A	Screw, M6S 5x30 A2-80
8	3858009073	A	Nut, ML6 M5 Brass
11	3858010121	A	Washer BRB 6.4x12.5, Stainless
18	3850408018	A	Panel, Display Board, Black
21	3850403019	A	Front, Black
24	3858006012	A	Screw, PT PH4 x 10
33	3850405014	A	Retainer, Black
36	3850397013	A	Hinge, Black
38	3850399019	A	Hinge Pin
39	3858010022	A	Washer, 5.5x12x1, Black
40	2931715011	A	Lid
44	2930487000	A	Lid
60	2932664093	A	Base Cover, Black
81	2932078021	A	Plate, Freezer
82	2932077023	A	Shelf
84	2932853027	A	Coverplate, Plastic
86	3858004108	A	Screw, MRX 5x25, Stainless
87	3858004090	A	Screw, MRX M5x12, stainless
88	2932074012	A	Freezer Unit
89	3858036035	A	Screw, KFXS B8x13 SFA
90	3858037025	A	Screw, MFX 5x12 RFR
91	2932075019	A	Mounting Plate
93	2931484014	A	Bracket
95	3850385018	A	Name Plate
97	3850411004	A	Instruction Plate
99	2932680024	A	Switch
105	3858004041	A	Screw, MRX 4x6 FZ
106	3858039047	A	Screw, MRX M4x10, Zinc
107	3858010113	A	Washer, BRB 6.4x12.5, Zinc
108	3858009057	A	Nut ML6 M6, Black

Only Those Parts Identified With An Index Number Are Available For Service Replacement.

CABINET, INTERIOR COMPONENTS

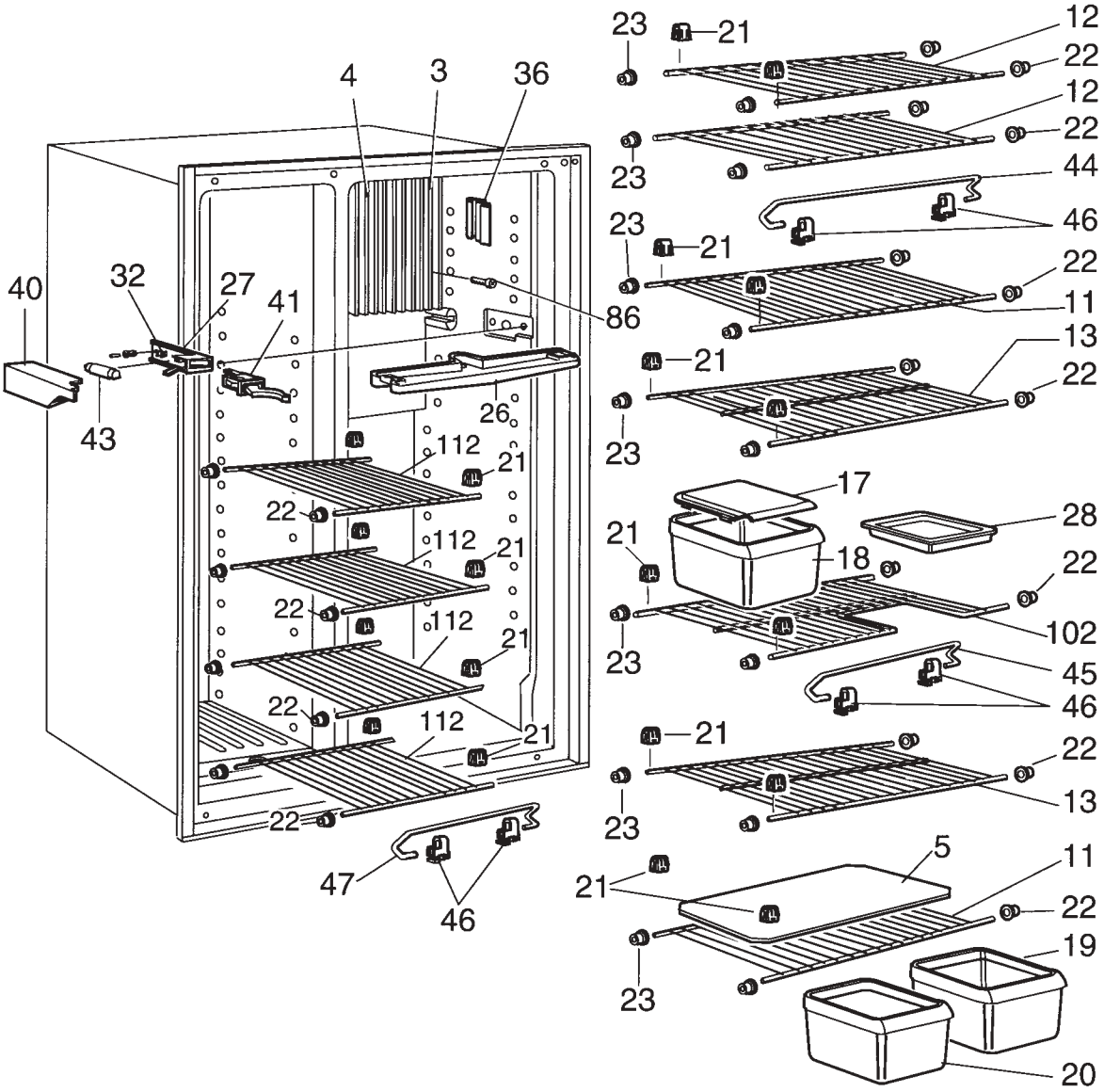

NCMOD2049339

Only Those Parts Identified With An Index Number Are Available For Service Replacement.

CABINET, INTERIOR COMPONENTS

NDR1292 921148110 = A

Index No.	Part No.	A	Description
3	2932761014	A	Cooling Fins, RH
4	2932761030	A	Cooling Fins, LH
5	2931117135	A	Shelf, Plastic
11	2932022029	A	Grating Shelf
12	2932022011	A	Grating Shelf
13	2932022037	A	Grating Shelf
17	2002727077	A	Lid
18	2002726145	A	Vegetable Box
19	2002726129	A	Vegetable Box
20	2002726137	A	Vegetable Box
21	2932102011	A	Shelf Support
22	2932101013	A	Plug
23	2932103019	A	Plug
26	2932769017	A	Drip Protection
27	2932523018	A	LampHolder
28	2932636018	A	Box
32	2932108018	A	Contact Pin
36	2932456011	A	Bracket Thermistor
40	2932106012	A	Lamp Cover
41	2932665017	A	Switch
43	2007290006	A	Lamp, 10Watt,12VDC
44	2007337153	A	Rack
45	2007337161	A	Rack, L=164mm
46	2930693045	A	Holder
47	2007337195	A	Rack
86	3858004108	A	Screw, MRX 5x25, Stainless
102	2932049014	A	Grating Shelf
112	2932079011	A	Grating Shelf

Only Those Parts Identified With An Index Number Are Available For Service Replacement.

CONTROL & BURNER COMPONENTS

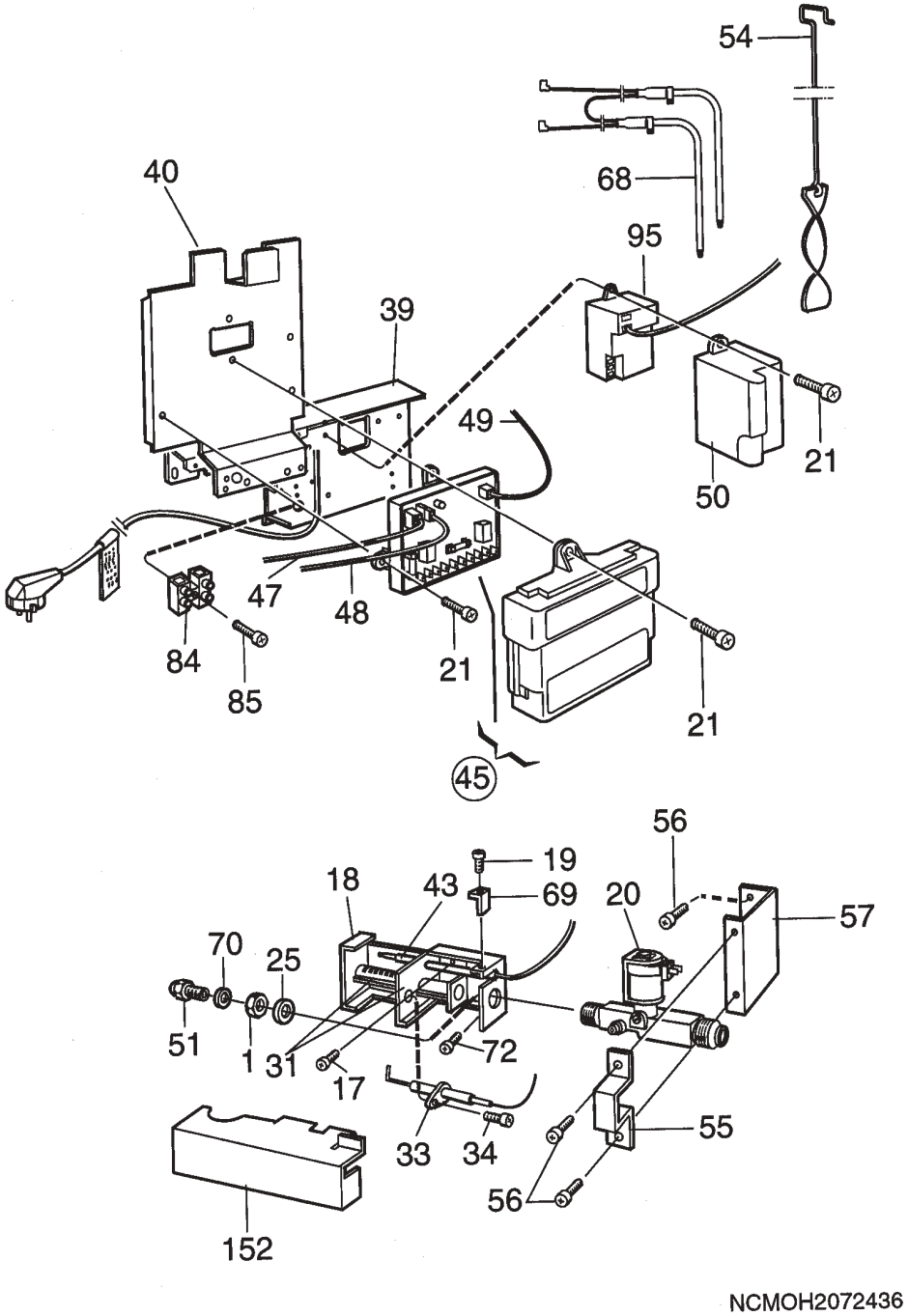

Only Those Parts Identified With An Index Number Are Available For Service Replacement.

CONTROL & BURNER COMPONENTS

NDR1292 921148110 = A

Index No.	Part No.	A	Description
1	0140207044	A	Nut
17	3858039039	A	Screw, MRX M4x8, Zinc
18	2932161017	A	Burner Housing
19	3858002144	A	Screw, RXS B6x9.5, Zinc
20	2932615020	A	Solenoid Valve
21	3858002151	A	Screw, RXS B6x13, Zinc
25	3858010071	A	Washer, 12.51x18.5x1
31	0955001672	A	Burner Pipe, Complete
33	2932781020	A	Electrode, Complete
34	3858002052	A	Screw, RXS B6x6.5, Zinc
39	2932031012	A	Holder
40	2932032010	A	Holder
43	2931826024	A	Thermocouple
45	3850415013	A	Power Module, Universal
47	2954542029	A	Conductor, PCB
48	2931863027	A	Conductor, Thermistor
49	2954539017	A	Conductor, Solenoid Valve
50	2931886010	A	Cover
51	2007419332	A	Jet #76
54	2932667054	A	Flame Spreader
55	2932662014	A	Bracket
56	3858039047	A	Screw, MRX M4x10, Zinc
57	2932043017	A	Support Plate
68	0173772013	A	Heater, 210 Watt, 120VAC
69	2930660010	A	Fixing Bracket
70	2007457001	A	Washer, 0.5mm
84	3858022019	A	Terminal Block
85	3858002185	A	Screw, RXS B6x25, Zinc
95	2931132027	A	Spark Generator
152	2931401018	A	Cover

Only Those Parts Identified With An Index Number Are Available For Service Replacement.

CABINET, REAR VIEW

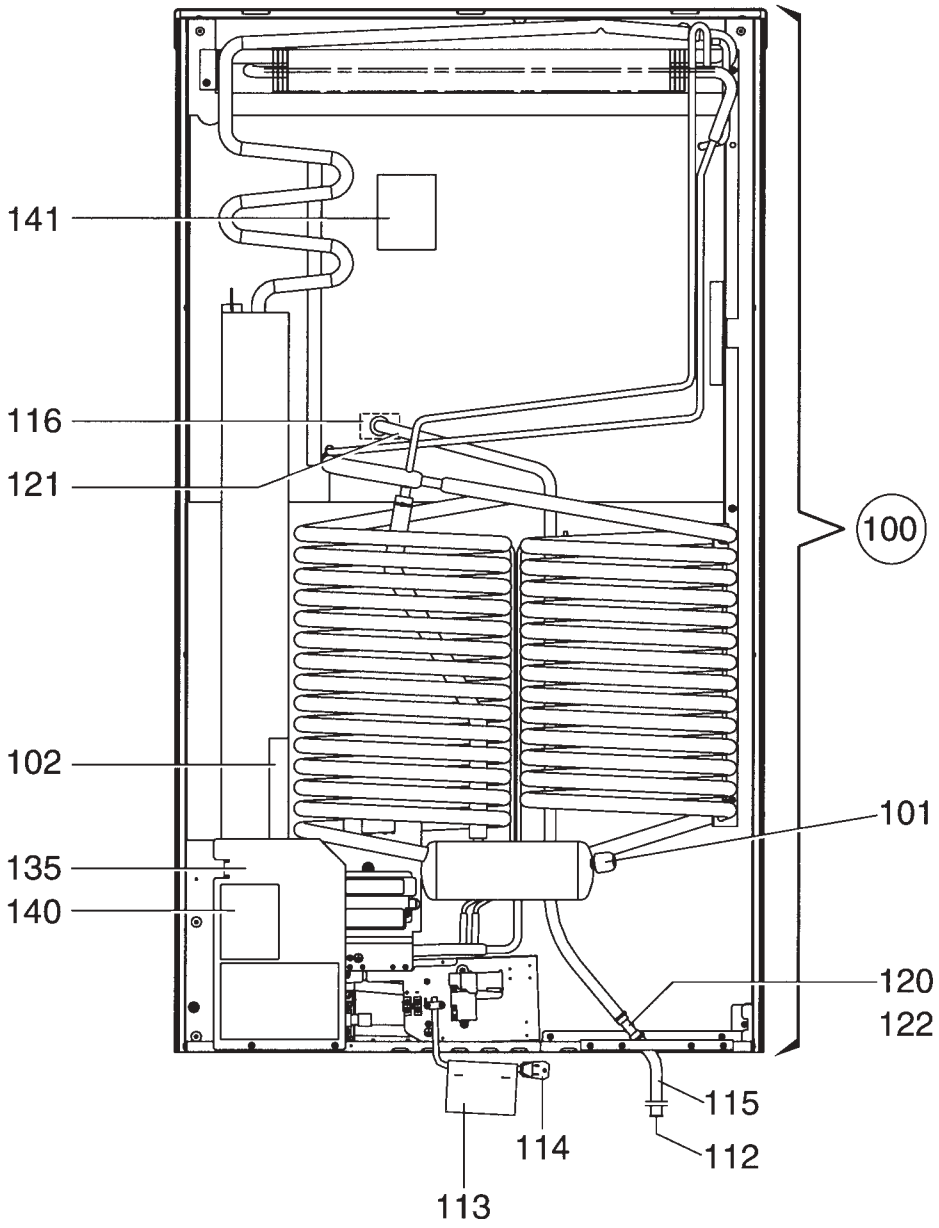

NCMOE2063006

Only Those Parts Identified With An Index Number Are Available For Service Replacement.

CABINET, REAR VIEW

NDR1292 921148110 = A

Index No.	Part No.	A	Description
100	2934945102	A	Cooling Unit, Type 945, W/Thermal Fuse
101	0173228008	A	Cap
102	2933557023	A	Flap
112	2932115013	A	Discharge Pipe, Plug
113	2932733005	A	Label
114	2002699110	A	Cord Set
115	2932749035	A	Drain Hose L=580mm
116	2932635010	A	Drain
120	2932877018	A	Coupling
121	2932749068	A	Drain Hose, L=1060mm
122	2932749076	A	Drain Hose, L=55mm
135	2932155019	A	Support Plate
140	3850582002	A	Label
141	3850583000	A	Label

Only Those Parts Identified With An Index Number Are Available For Service Replacement.

WIRING DIAGRAM

NDR1292 921148110

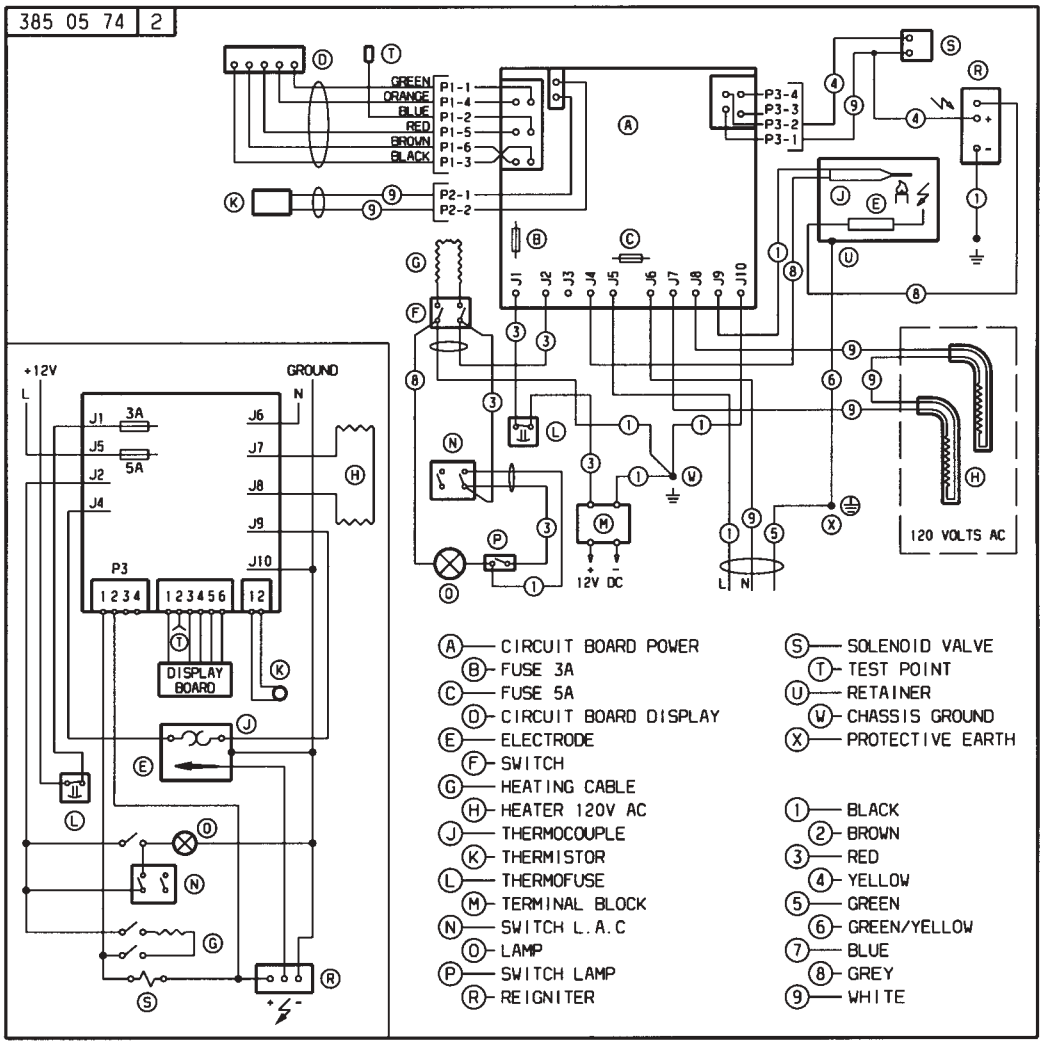

N38505742