A&E Systems

# Oasis Automatic and Manual RV Door Awning System

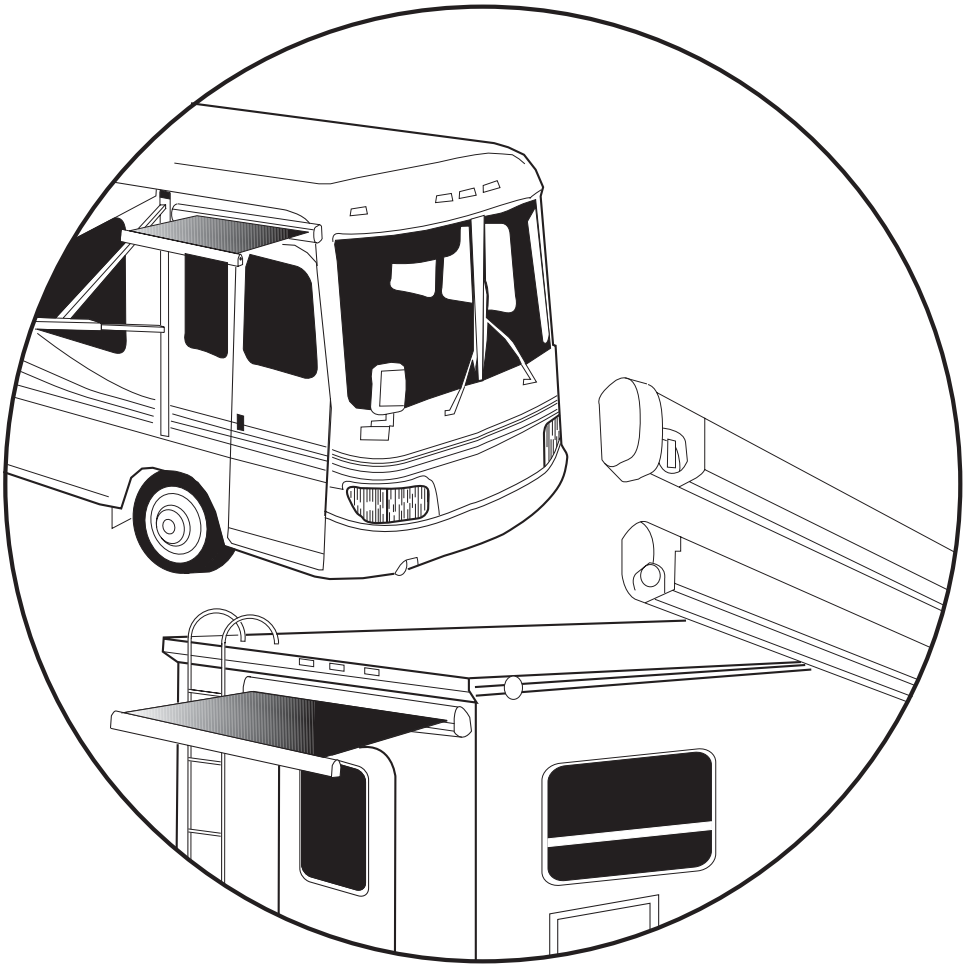


**USA**
SERVICE OFFICE
Dometic Corp.
509 So. Poplar St.
LaGrange, IN 46761
260-463-4858

**CANADA**
Dometic Dist.
866 Langs Dr.
Cambridge, Ontario
CANADA N3H 2N7
519-653-4390

**For Service Center Assistance Call:**
800-544-4881


# INSTALLATION & OPERATING INSTRUCTIONS

## Model

**970(XX)56.(X)00(X)Oasis**
**971(XX)56.(X)00(X) Oasis-Elite**
**972(XX)56.(X)00(X) Oasis-Elite**


**REVISION**
Form No. 3307901.011 7/02
(Replaces 3307901.003)
(French 3307902.019)


©2002 Dometic Corp.


LaGrange, IN 46761 U.S.A.

## SAFETY INSTRUCTIONS

This manual has safety information and instructions to help users eliminate or reduce the risk of accidents and injuries.

## RECOGNIZE SAFETY INFORMATION

This is the safety-alert symbol. When you see this symbol in this manual, be alert to the potential for personal injury.

Follow recommended precautions and safe operating instructions.

## UNDERSTAND SIGNAL WORDS

A signal word , **WARNING** OR **CAUTION** is used with the safety-alert symbol. They give the level of risk for potential injury.

**WARNING:** means if the safety information is not followed someone could be injured or killed and/or damage to equipment could occur.

**CAUTION:** means if the safety information is not followed someone might be injured and/or damage to equipment might occur.

Read and follow all safety information and instructions.

Learn how to operate the awning properly.

## GENERAL INFORMATION

**Important: Read all of the following steps before beginning installation.**

The Dometic Corporation reserves the right to modify appearances and specifications without notice.

**Important: This awning must be installed by a qualified person.**

**A. POSITION OF THE AWNING**

1. Before beginning installation of the case, be sure the door will open when the awning is completely extended. Allow for a natural downward slant of the awning. Check for a solid backing or under-structure where screws are to be used.
3. Before drilling, be sure that there are no obstacles inside the wall (cables, wires, gas pipes, etc.).
4. Minimum clearance from bottom of case to door is 3.00 inches.

# INSTALLATION INSTRUCTIONS

## A. AWNING RAIL INSTALLATION

1. Secure awning rail to side of RV at the desired location using # 6 x 1" wood screws (not provided). Awning rail must be located at least 8" above the door. This will allow the door to open when the awning is in the extend position.

**Important: Structural backing is required where mounting screws will be installed through sidewalls for securing Awning Rail.**

**FIG. 1** **AWNING RAIL**

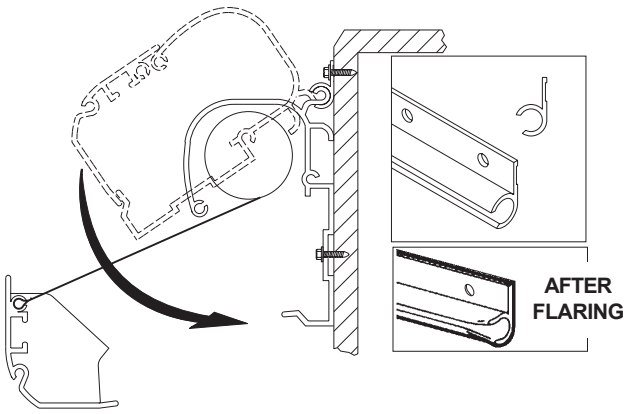

## B.SECURE AWNING

1. Slide the awning into the awning rail. To aid in installation, flare end of awning rail before attempting to slide awning into rail (See FIG 1).

**Note:** Awning can be rotated up when sliding into rail.

2. Open awning to its full extension. (See Operating Instructions).
3. Secure back of case to side wall of vehicle. Use the holes in case as a guide and pre-drill holes in side wall using a 9/64" drill bit (5/32" if drilling into steel). Secure with two (2) #10 x 1-1/2" screws (not provided.) See FIG. 2.

FIG. 2

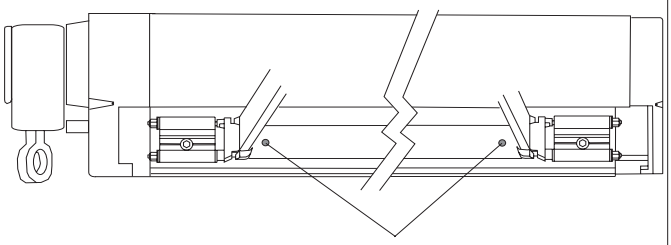


4. Using two (2) # 6 x 1/2" screws (not provided) secure awning through awning rail approximately six (6) inches in from each end. See Fig. 2A.

FIG. 2A

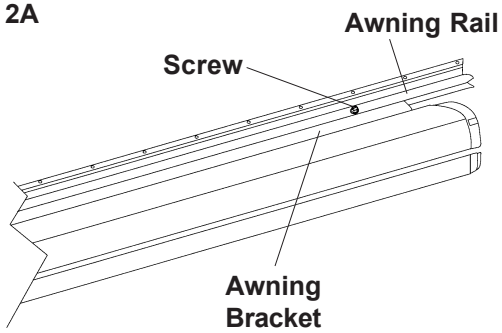


## C.CONTROL BOX INSTALLATION (OASIS-ELITE ONLY)

**Important: Electronic Control Box is pre-wired for installing an A & E OneStep and WeatherPro Patio Awning. Use only wires designated for Oasis awning. When adding an A & E OneStep or WeatherPro Awning to this control box order Oasis Elite Adapter Kit number 3109688.006.**

**Note:** The control box system is protected by a 15 amp fuse. If needed, a spare 15 amp fuse is taped inside the control box. Shut off the 12VDC power to the control box and remove control box cover to expose fuse inside. Replace if necessary.

1. First, decide on a location for the control box. Recommended locations for the control box are compartments outside the living quarters such as one of the basement storage compartments. The control box must be installed at a location where it will not be directly exposed to weather or extreme temperatures.
2. Route two (2) wires (installer supplied) from the motor (blue & red) to the control box. See FIG. 7and FIG. 7A).To avoid voltage drop, follow wire length guide listed below:

| Wire Length | Wire Size |
|---|---|
| 10' & Under | 14 Gauge |
| 11' to 30' | 12 Gauge |
| Over 30' | 10 Gauge |

3. Awning is shipped with motor cover loosely fitted around motor. Remove front of cover to expose motor wires.
4. Route the Blue and Red wires from the control box through the grommet in rear of the cover and connect them to the Blue and Red wires from the motor. Seal hole in side wall with silicon sealer. See FIG. 3.
5. Place front cover back over motor and line up holes in left side of cover. See FIG. 3. Install rivets in left side holes.
6. Line up hole in cover on top right and drill a .125" dia. pilot hole in nylon cover using hole in motor cover as a guide. Install rivet. Line up hole in cover on bottom right and drill pilot hole in nylon cover using hole in motor cover as a guide. Install rivet.

FIG. 3

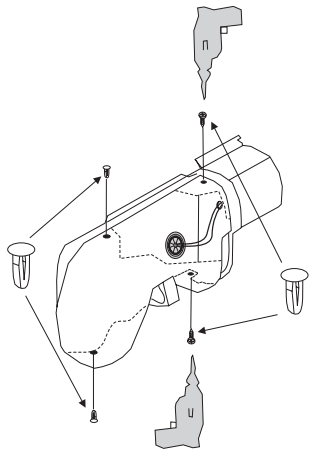

7. Connect motor to control box using supplied pig tails.

**Important: Dielectric grease must be placed on all exposed pins.**

Always seal where wires enter coach and protect wires from chafing. All splices should be insulated and secure any excess wire to prevent damage.

**Important: The Black and White wires extending through the end cap are not used for this installation. Cut wires off flush with end cap and throw away.**

8. Choose a desired location for the remote switch inside the living quarters such as the door area. Avoid areas where switch may be exposed to weather.
9. Cut hole in structure where remote switch is to be installed. Place decal on bezel and pop switch into opening. Secure bezel with appropriate fasteners (not supplied).
10. Route a Brown, Yellow and Green wire from the remote switch to the control box. Install 1/4" insulated terminals on remote switch end of wires. Use the supplied pig tail to connect the switch to the Brown/White, Yellow/White and Green/White wires at the control box.

**Important: Dielectric grease must be placed 3 on all exposed pins.**

11. Run two (2) wires from the control box to the 12 VDC supply source. It is recommended that these wires be (Red+ and Black -) 12 gauge wires. This should be on a separate 15 amp circuit. Connect the Red and Black wires from the control box to the 12VDC supply wires using butt connectors.
12. To ensure proper operation, the control box must have a minimum of 12.5 VDC at the control box during awning operation. It may be necessary to increase the wire size if voltage is below 12.5 VDC.
13. Auto Interlock Connection
    A. Run a 16 gauge wire (installer supplied) from the ignition Switch (+ 12 VDC when key is on) of vehicle to the Ignition Interlock (Pink) wire of control box.
    B. Connect wires using supplied pigtail. See FIG. 7 and FIG. 7A.

## D. OTHER INSTALLATION NOTES

1. To prevent water leakage, always use silicon sealant where each fastener enters the sidewall of the vehicle.
2. Do not over tighten fasteners. This will cause them to "strip out" and severly weaken their holding ability.

# OPERATING INSTRUCTIONS

## A. TO OPEN

1. **Oasis** (Manual)
   a. Place the hook of the crank into the eye of the gear and turn gear counter-clockwise to unroll the awning. (See FIG.4).

**FIG. 4**

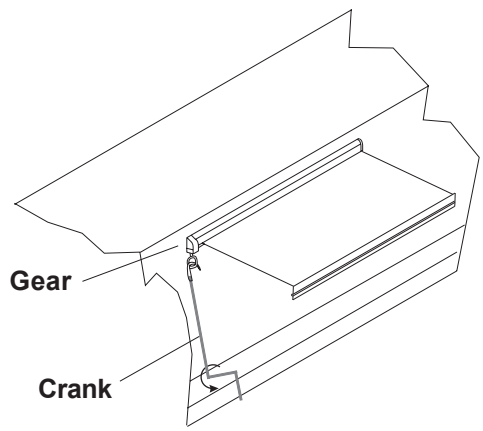


2. **Oasis/Elite** (Electric)
   a. Press and hold the remote switch in the extend position until the awning is fully open. Release switch to prevent awning from rolling up backwards. See FIG.5.

**Fig. 5**

   b. Awning can also be opened manually by using the crank without using the switch. See FIG. 4.

## B.TO CLOSE

1. **Oasis** (Manual)
   a. Place the hook of the crank into the eye of the gear. Turn gear clockwise to roll awning up. Case is self locking.

**! CAUTION**

**Fabric must roll around roller tube from bottom of roller tube. Make sure the awning is correctly closed by observing the red indicators at either end of the awning.**

2. **Oasis/Elite** (Electric)
   a. Press and hold the remote switch in the retract position until awning is fully closed. See FIG. 5.
   b. Awning can also be closed manually by using the crank without using the switch. See FIG. 4.

## C.OTHER OPERATION NOTES

1. If heavy wind conditions exist, retract awning and place in storage position.
2. Crank assembly can be shortened as shown in FIG. 6.)
3. The supplied crank can be stored in a storage compartment.

**FIG. 6**

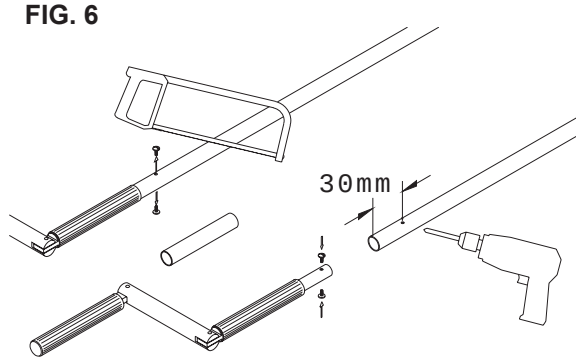


# A & E OASIS & OASIS ELITE HELPFUL HINTS

**Important: We remind you that the awning is to shelter you from the sun, not from rain, wind or snow.**

- Whenever the awning is wet while rolled up, as soon as conditions allow, roll it out and let it dry before rolling it up again. This will help prevent the formation of mildew and add greatly to the life of the awning.
- Mildew does not form on the fabric itself, but on the accumulated dust, dirt and grime. Periodically clean vinyl or woven acrylic fabric using a mixture of **1/4 cup of dish soap and 1/4 cup of bleach mixed with 5 gallons of warm water.** Liberally slosh the mixture on the top of the fabric and roll the awning up for 5 minutes.This will apply the mixture to the bottom as well. Roll it back out and hose off with fresh water. Repeat if necessary. Allow to dry before rolling up.

**Oasis-Elite 3109717.003**
**Electronic Control Kit Wiring**

**FIG. 7**

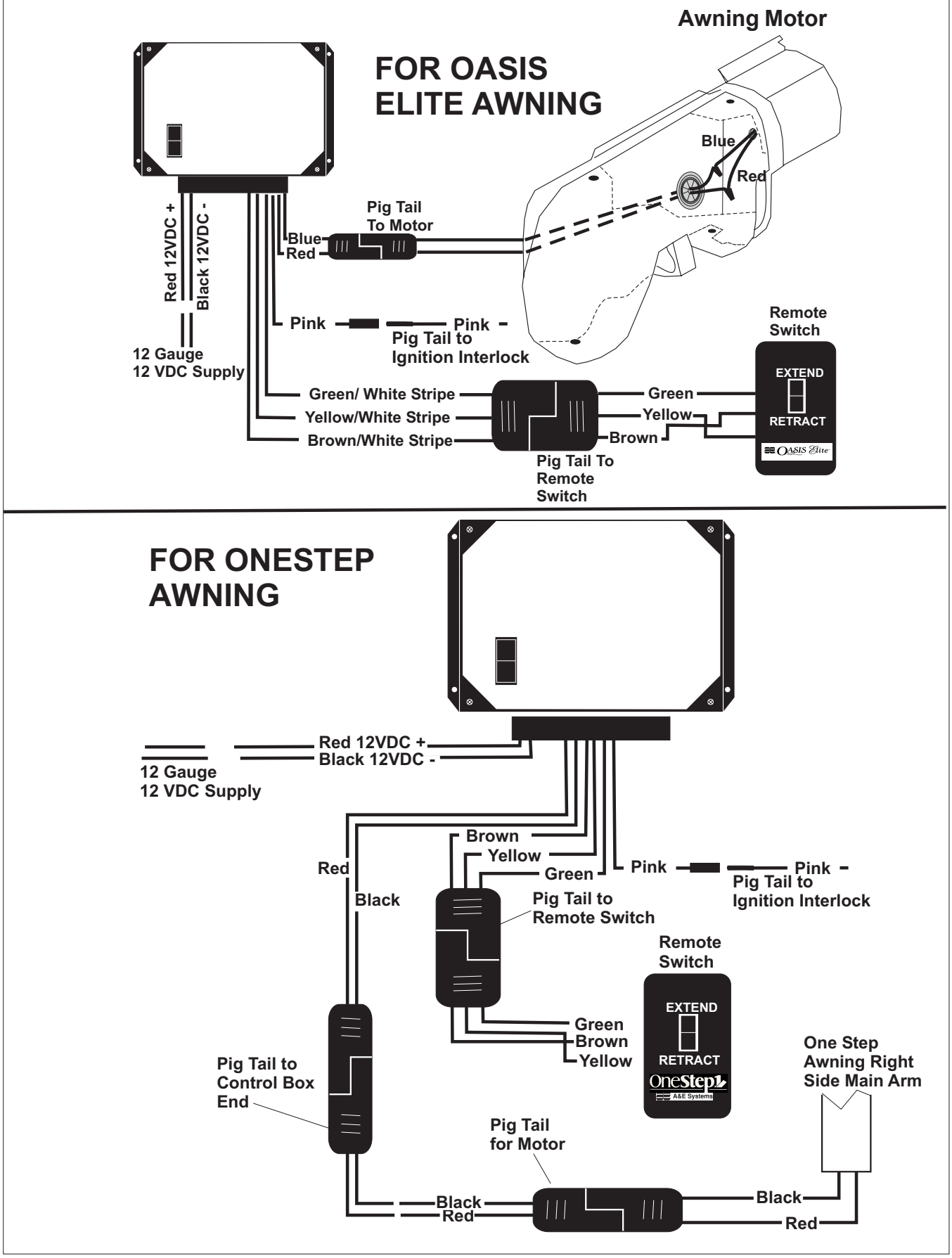

FIG. 7A
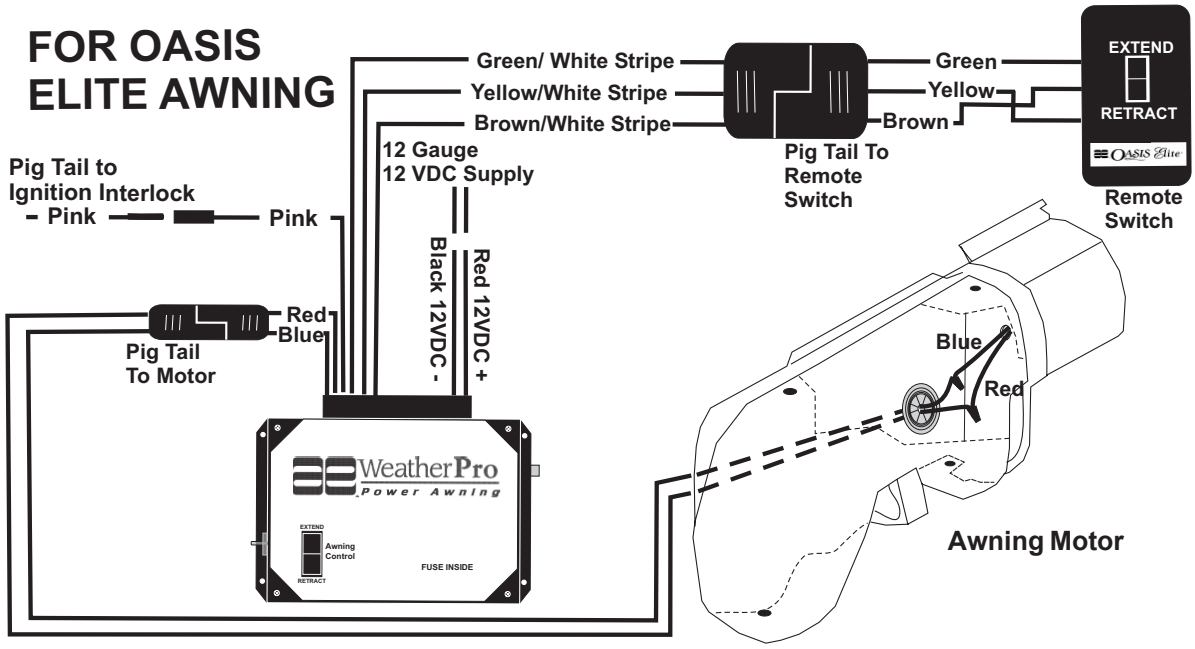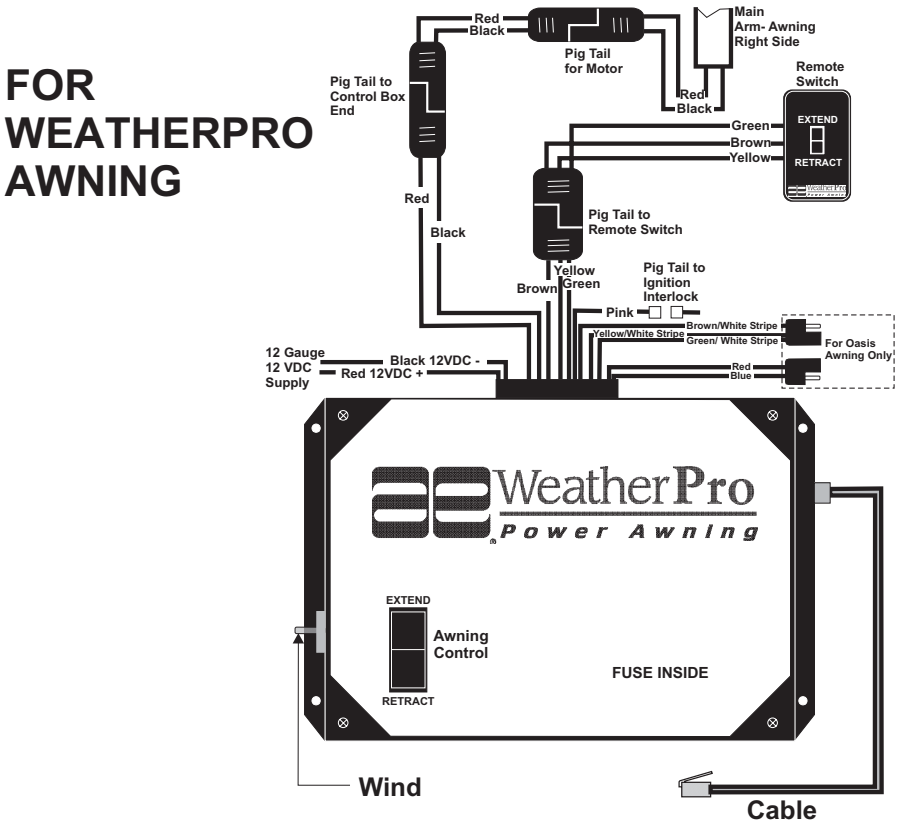
## Oasis-Elite 3109688.006
## Electronic Control Kit Wiring