Duo-Therm®
By Dometic

WHEN ORDERING SPARE PARTS, ALWAYS STATE:
MODEL NO. - PRODUCT NO. - QUANITY-
PART NO. - DESCRIPTION -
FOR ELCETRICAL DETAILS ALSO:
VOLTAGE - WATTAGE

620525.321
ROOF MOUNTED
RV AIR CONDITIONER

115 VAC / 60 Hz.
Includes C, & D Suffix No.

USA
SERVICE OFFICE
The Dometic Corp.
509 So. Poplar St.
LaGrange, IN 46761
219-463-4858

CANADA
Dometic Dist.
866 Langs Dr.
Cambridge, Ontario
CANADA N3H 2N7
519-653-4390

For Service Center Assistance Call:
800-544-4881

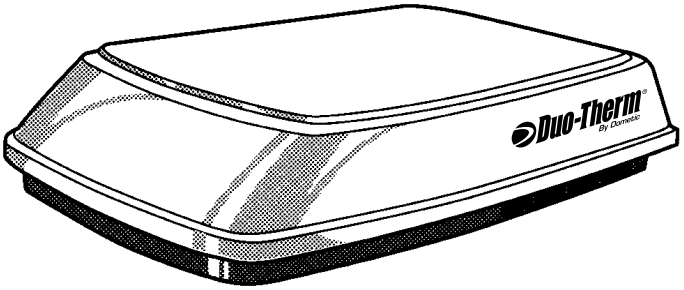

USED WITH THE
3109228.001 COMFORT CONTROL CENTER
3106615.XXX AIR DISTRIBUTION BOXES
AND
3105007.XXX and 3105935.XXX RETURN AIR COVER KIT

PARTS LIST

MODEL
620525.321
Prod. No. 991760350

Form No. 3109909.006 2/01

©2001 The Dometic Corporation
LaGrange, IN 46761

SPECIFICATIONS

MODEL NUMBER		620525.321
Nominial Capacity (BTU/HR)*		13,500
Electrical Rating		115VAC, 60Hz., PH.
Compressor Rated Load Amps		12.4
Fan Motor Rated Load Amps		3.1
Compressor Locked Rotor Amps		60.0
Fan Motor Locked Rotor Amps		8.8
SCFM - High Speed (Max./Min.)		335/250
Refrigerant (R22) oz.		15.5
Minimum Wire Size**		12 AWG Copper up to 24ft.
AC Circuit Protection (User Supplied)		20 Amp Time Delay Fuse or HACR Circuit Breaker
DC Circuit Protection (user Supplied)		Installation must comply with all National, State, Providence and/or Local Electrical Codes
Installed Weight (Pounds)		102
Minimum Generator SIZE***	1UNIT	3.5 KW
	2 UNITS	5.0KW

* Maximumunit performance achived at full rated voltage.

** For lengths over 24ft. , consult the National Electric Code.

*** The Dometic Corp. gives general guidelines for generator requirements. These guidelines come from experiences people have had in actual applications. When sizing the generaator, the total power usage of your recreational vehicle must be considered. Also keep in mind generators lose power at high altitudes and from lack of maintenance.

WIRING DIAGRAM FOR MODEL 620525.321

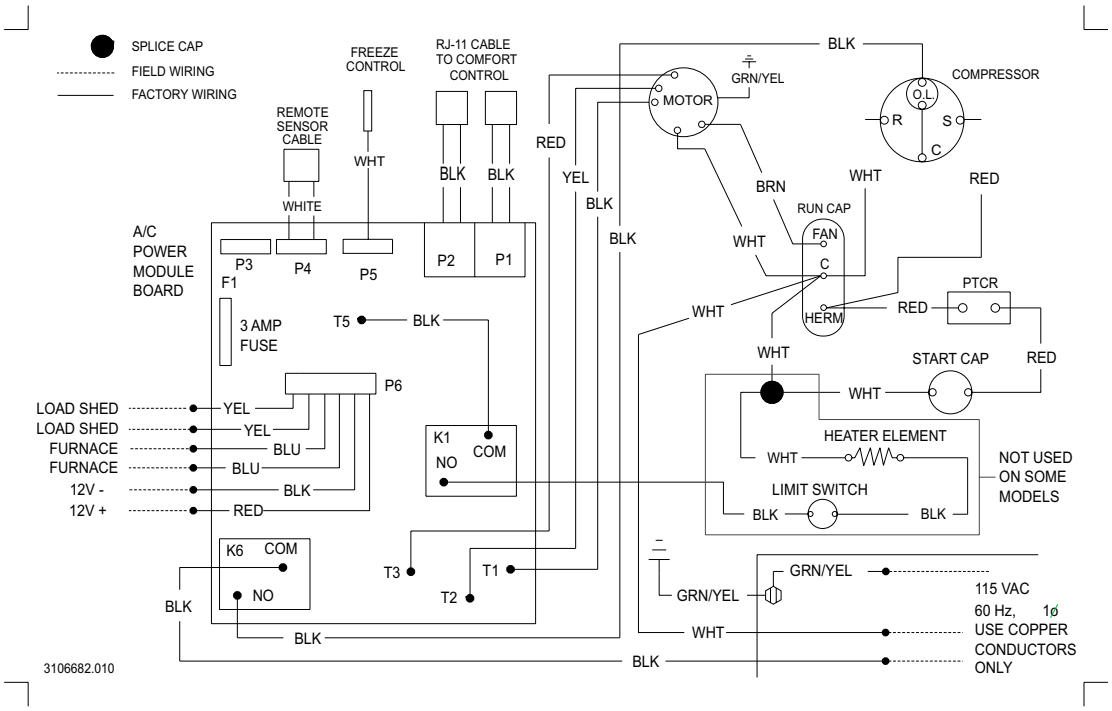

WIRING DIAGRAM FOR 3106615.002 & 3106615.010 AIR BOX ASSEMBLY

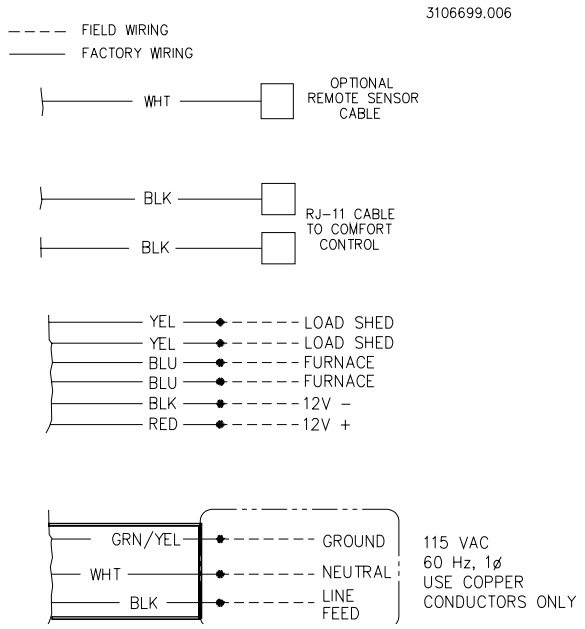

ROOF MOUNTED ASSEMBLY

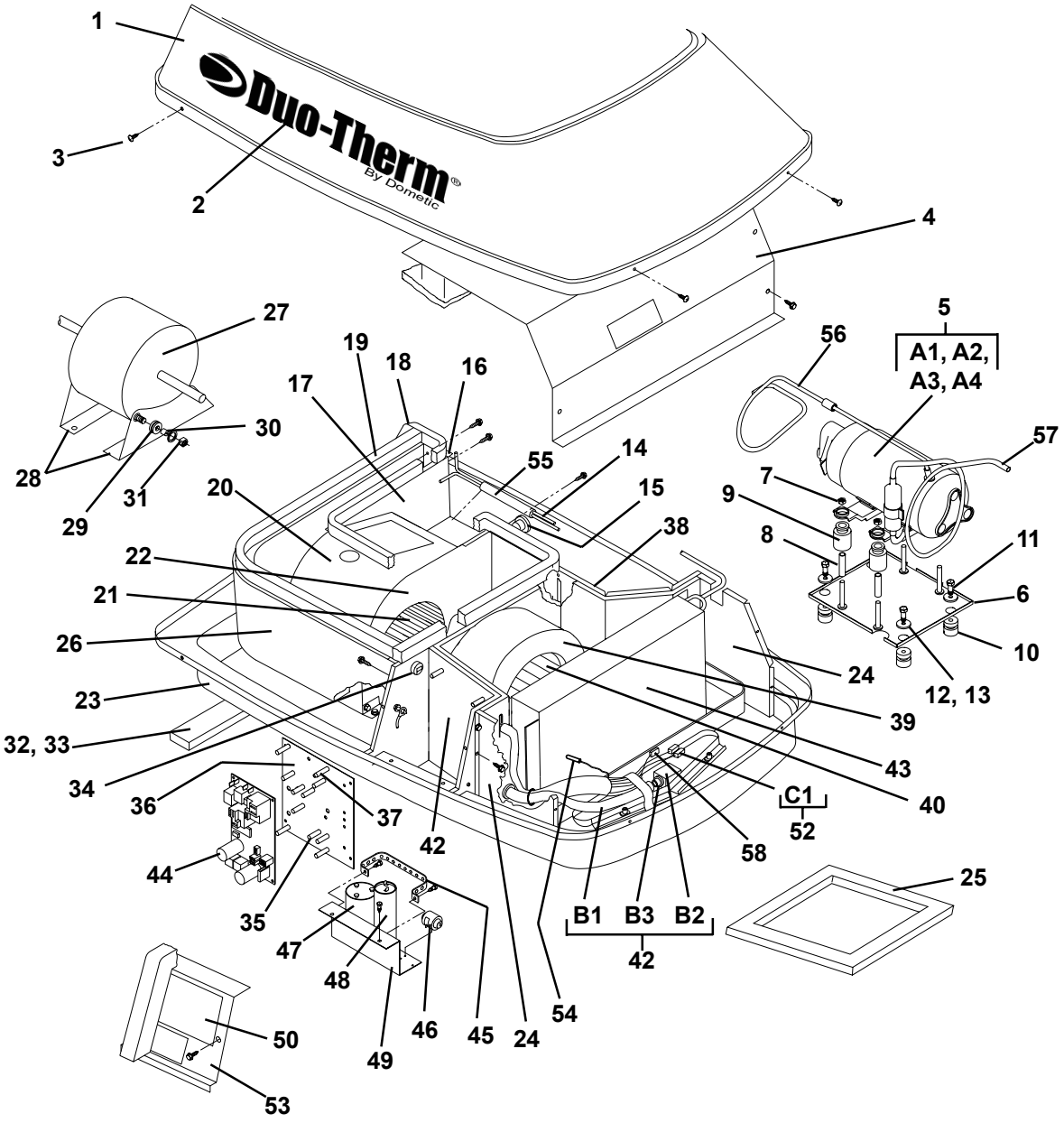

MODEL 620525.321

Index	Description	Part Number
1	Shroud	See Note 1
2	Decal, Duo-Therm (2 req.) (Not Used On “D” or “E” Suffix)	3109274.005
3	Screw, Shroud (4 req.)	313685.001
4	Cover, Evaporator w/insulation	3102514.803
5	Compressor, Asm	3102984.006
A1	Cover Terminal	3102321.001
A2	Gasket Terminal Cover	3102320.003
A3	Overload	3100250.228
A4	Nut	306342.005
6	Plate Cmpr. Mtg w/studs	3102590.035
7	Nut, Flange (4 req.)	306342.002
8	S leeve, Compressor (4 req.)	3100239.072
9	Grommet, Compressor (4 req.)	3100238.181
10	Grommet, Cmpr. Mtg. Plate (4 req.)	3102324.005
11	Screw, 1/4-20 X 0.75 (4 req.)	312110.024
12	Washer, Steel (4 req.)	309513.015
13	Sleeve, Cmpr. Mtg. Plate (4 req.)	3100239.098
14	Capillary Tube (2 req.)	3100245.418
15	Bushing, Snap-in	301028.037
16	Plate, Close-off	3100256.001
17	Blower Side, Rear	3100261.001
18	Tape, Foam 1.25 X 0.75 X 63	3102669.052
19	Tape, Foam 1.25 X 1.25 X 35	3102669.029
20	Blower Scroll	3100260.003
21	Wheel, Condensor	3100386.006
22	Blower Side Front	3100259.005
23	Base Pan	3103179.010
24	Bulkhead, Evaporator (Set RH/LH)	3102512.021
25	Gasket, 14 X 14	3100247.000
26	Coil, Condensor	3101467.003
27	Motor	3108706.924
28	Mount, Motor (2 req.)	3106187.002
29	Grommet, Motor (4 req.)	3100230.022
30	Spacer (4 req.)	308046.000
31	Nut, Flange (4 req.)	306342.003
32	Gasket, 16 X 1.5 (2 req.)	3100286.016
33	Gasket, 10 X 1.5	3100286.032
34	Strain Relief	302994.017
35	Support, PC Board (6 req.)	3101623.019
36	Plate, Adaptor PC Board	3107965.018
37	Standoff, PC Board (8 req.)	3101624.017
38	Bulkhead compressor	3102511.049
39	Housing, Evap Blwr	3100300.007
40	Wheel, Evap	3100385.008
41	Insulation, Evap Blower	3108903.000
42	Bulkhead, Elect Box	3102532.029
43	Coil, Evaporator	3104573.005
44	Board, AC Power	3109229.009
45	Strap, Capacitor	317188.000
46	PTCR Device	3100876.006
47	Capacitor, Fan/Run	3100248.321
48	Capacitor, Compressor Start	3100236.235
49	Panel, Capacitor Mounting	3104412.006
50	Decal, Field Wiring	3106682.010
51	Asm, Power Cable	3108703.194
B1	Sleeve Fiberglass	3100394.109
B2	Box , Junction	3101316.036
B3	Strain Relief	302994.015
52	Asm., Conrrol Cable	3108703.186
C1	Coupler, In-Line (2 req.)	3106696.002
53	Cover, Electric Box	3102510.009
54	Sensor, Control Cold	3109409.001
55	Drier, Filter	3103882.001
56	Line, Discharge	3102847.005
57	Line, Suction	3102846.007
58	Extension, Remote Sensor	3106697.000

NOTE 1:

Models ending in .321
use 3107746.004 Shroud, L/Decals-Shell White

Models ending in .321C
use 3107746.012 Shroud, L/Decals-Polar White

Models ending in .321D
use 3107746.020 Shroud, L/Decals-Light Gray

CUSTOMER OPTION:

3106615.002 Air Distribution Box-Shell White
3106615.010 Air Distribution Box-Polar White
3109228.001 Comfort Control Center
3106486.008 Remote Sensor 8’
3106486.016 Remote Sensor 16’
3106486.024 Remote Sensor 60’
3107180.006 Kit, Jct Box Cvr & Bolts
3105007.003 Cover, Kit Return Air-Shell White
3105007.011 Cover, Kit Return Air-Polar White
3105935.005 Cover, Quick Cool-Shell White
3105935.013 Cover, Quick Cool-Polar White
3106776.002 Kit, Cover w/conduit connector

MODEL 620525.421
3Customer Option- Required
3109228.001 Comfort Control Center

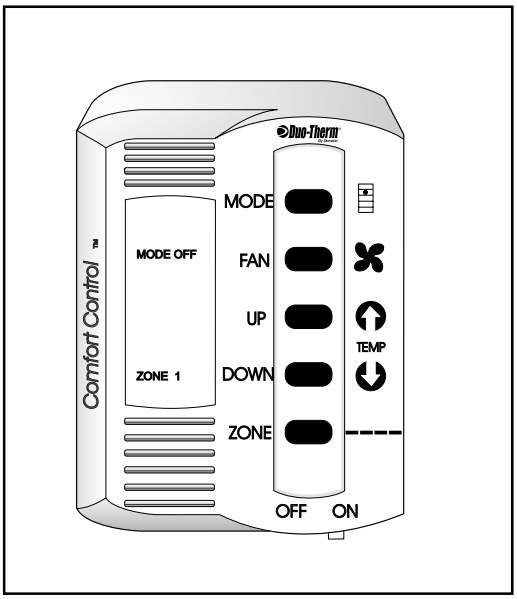

Customer Option - Required
3107180.006 COVER BOLT KIT

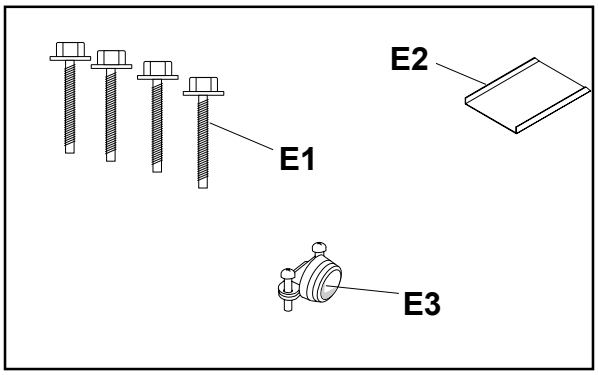

Index#	Description	Part No.
E1	Bolt, Mtg. 1/4-20x8.00 (4 req.)	3106756.020
E2	Cover, Box Junction	3101316.028
E3	Cable, Connector	20010.000

MODEL 620525.321

Customer Option - Required

3106615.002 Box, Asm. Complete Air (SW) F1-F6
3106615.010 Box, Asm. Complete Air (PW) F1-F6

	Description	Part No. 3106615.002	Part No. 3106615.010
F1	**Box, asm. air (D1-D6)**	**3101390.056**	**3105908.010**
	G2 Louver (2 req.)	3100289.002	3100289.002
	G3 Filter (2 req.)	3100281.009	3100281.009
	G4 Grill, return (2 req.)	3100270.002	3100270.010
	G5 Decal, LH	3103816.009	3103816.009
	G6 Decal, RH	3103815.001	3103815.001
F2	**Template, Ceiling (E1-E3)**	**3105709.038**	**3105709.038**
	H1 Duct, ext. Upper	3100262.025	3100262.025
	H2 Duct, ext. lower	3100342.017	3100342.017
	H3 Wiring decal	3107833.005	3107833.005
	H4 Insulation	3107133.005	3107133.005
F3	**Bolt, mtg. 1/4-20 x 8 (3 req.)**	**3106756.020**	**3106756.020**
F4	**Cover, junction box**	**3101316.028**	**3101316.028**
F5	**Cable connector**	**20010.000**	**20010.000**
F6	**Screw, 10-16 x 1/2 (8 req.)**	**312096.015**	**312096.015**

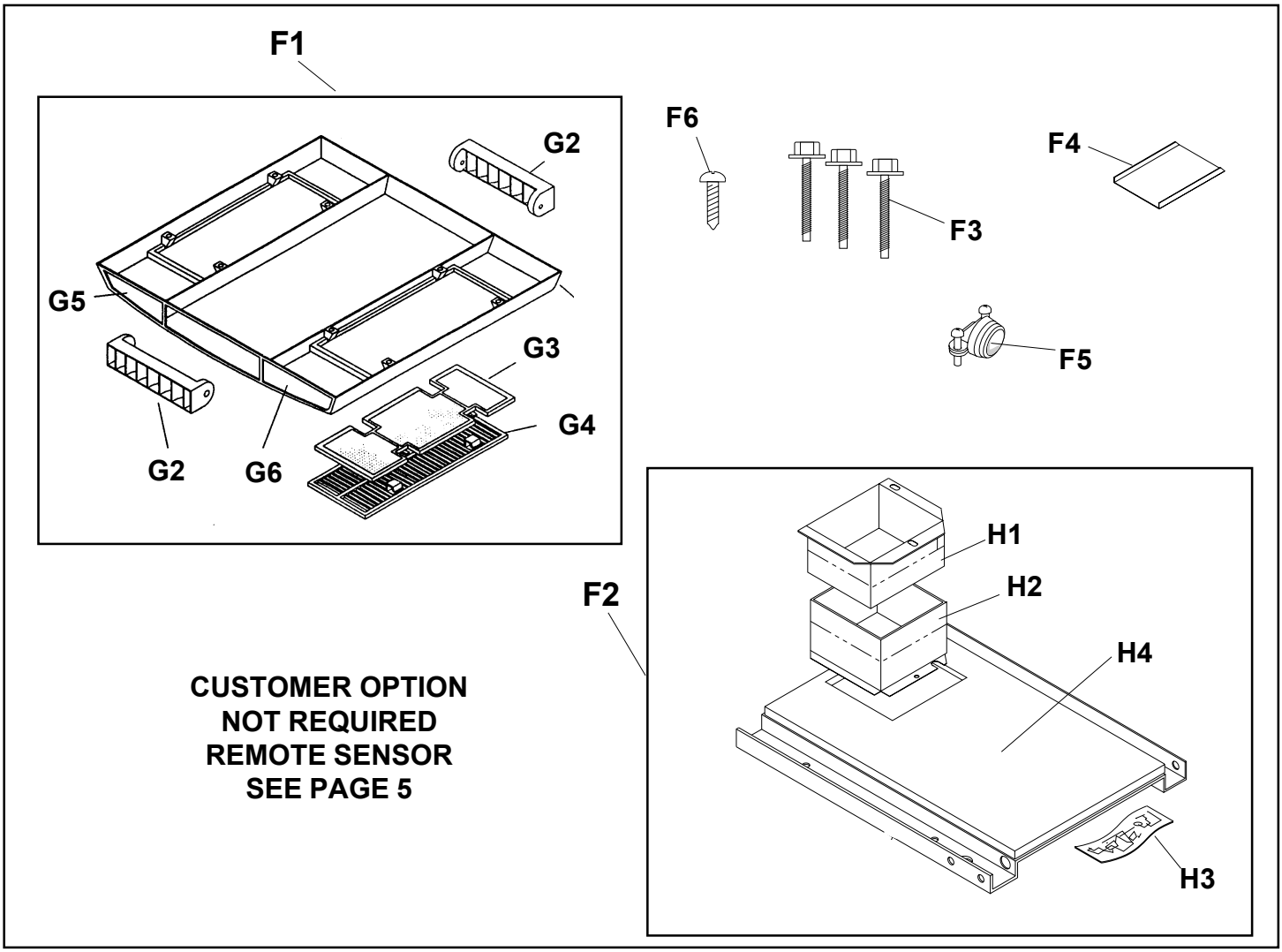

MODEL 620525.321

Customer Option - Not Required

3106486.008 & 3106486.016 REMOTE SENSOR (J1-J5)

Index #	Description	3106486.008 Part No.	3106486.016 Part No.
J1	Cap, sensor	3106488.012	3106488.012
J2	Sensor	3106484.004	3106484.011
J3	Nyloclip	304203.001	304203.001
J4	Screw #4-24 x .62 (2 req.)	312096.005	312096.005
J5	Screw #8-18 x .5	312096.014	312096.014

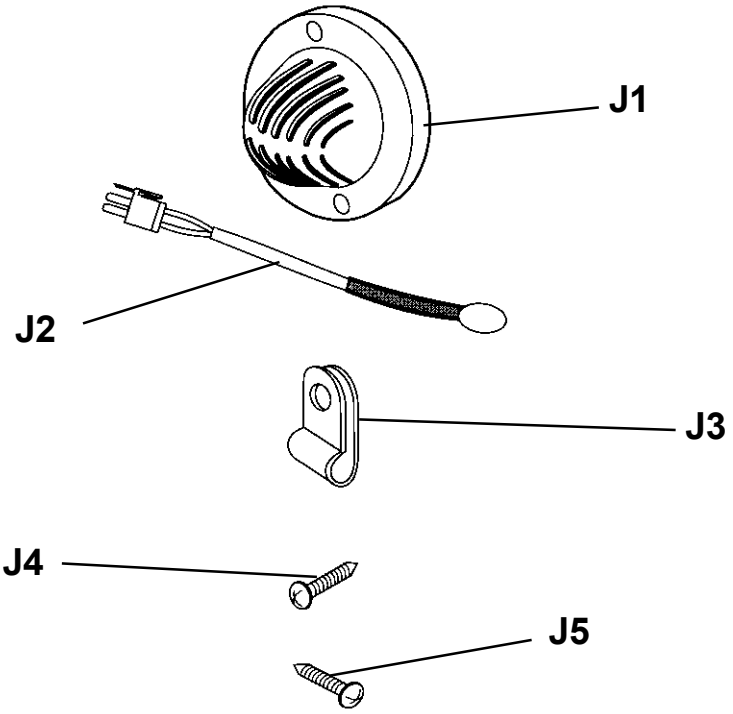

MODEL 620525.321
CUSTOMER OPTIONS (Required)

Index #		Description	Part No.	Part No.
K		**Kit, Return Air Cover**	**3105935.005 SW** **3105935.013 PW**	**3105007.003 SW** **3105007.011 PW**
	K1	Cover, asm., return air (SW)	3105958.007	3107867.008
		Cover, asm., return air (PW)	3105958.015	3107867.016
	L1	Grill, return air (SW)	3104928.001	3104928.001
		Grille, return air (PW)	3104928.019	3104928.019
	L2	Filter, air	3105012.003	3105012.003
	K2	Template, ceiling only	3105000.016	3105000.008
	K3	Insulation, ceiling template	3105946.002	3105010.007
	K4	Asm., Parts Bag	3108701.381	3108701.381
	K5	Tape, foam, 16"	3105154.003	3105154.003
	K6	Insulation, foam	3105014.009	3105014.009
	K7	Divider, slide	3105009.009	3105009.009
	K8	Tape, foam	306168.000	306168.000
	K9	Insulation, ceiling template, LH	3105946.010	– – – – – – –
	K10	Insulation, foam	3105014.017	3105014.017

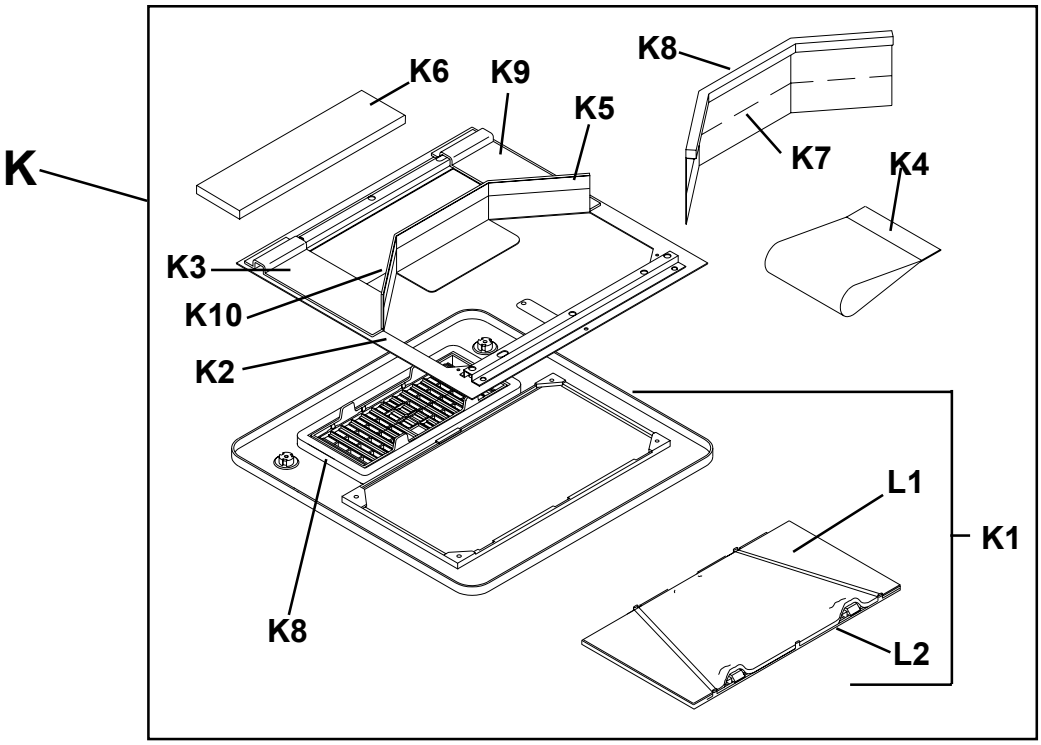

Customer Options - Required
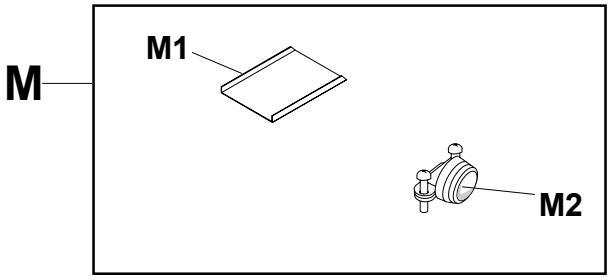
Index#	Description	Part No.
M	**Cover Kit, Junction**	**3106776.002**
	M1 Cover, junction box	3101316.028
	M2 Connector	20010.000