Duo-Therm®

# AIR CONDITIONER & HEAT PUMP SERVICE MANUAL

This Service Manual is the result of the dedication of The Dometic Corporation and its engineers to providing service people the necessary instructions for making accurate analysis of certain conditions. Provided is a comprehensive guide designed to lead a qualified mechanic through the Service Manual to locate and solve symptoms that may occur. Dometic continues their commitment to providing the most up to date information about servicing Duo-Therm Air Conditioners and Heat Pumps.

Form No. 3108892.013 10/00
©2000 The Dometic Corporation
LaGrange, IN 46761

# Table of Contents


| | Section | Page |
|---|---|---|
| **Installation** | **A** | **1** |
| AC Power Requirements | A1 | 1 |
| DC Power Requirements | A2 | 1 |
| Field Wiring | A3 | 1 |
| Breaker | A4 | 2 |
| Airbox | A5 | 2 |
| Ducting System | A6 | 2 |
| Roof Top Units | A6a | 2 |
| Basement Units | A6b | 9 |
| Thermostat Location | A7 | 12 |
| **Operation** | **B** | **14** |
| Air Conditioners | B1 | 14 |
| Mechanical Controls | B1a | 14 |
| Bi-Metal Control System | B1b | 14 |
| Analog Control System | B1c | 15 |
| Comfort Control Center System | B1d | 16 |
| Heat Pumps | B2 | 22 |
| Mechanical Controls | B2a | 24 |
| Bi-Metal Control System | B2b | 24 |
| Analog Control System | B2c | 25 |
| Comfort Control Center System | B2d | 26 |
| **Components** | **C** | **27** |
| Motors | C1 | 27 |
| Capacitor, Fan/Run | C2 | 28 |
| Capacitor, Start | C3 | 28 |
| PTCR Device or Start Relay | C4 | 29 |
| Compressor | C5 | 29 |
| Overload Protector | C6 | 30 |
| Cold (Freeze) Control | C7 | 30 |
| Electric Heat Strip | C8 | 30 |
| Selector Switch | C9 | 31 |
| Changeover Thermostat | C10 | 32 |
| Remote Sensor | C11 | 32 |
| Ambient Sensor | C12 | 33 |
| Reversing Valve | C13 | 34 |
| Transformer | C14 | 34 |
| Fuse | C15 | 34 |
| Relay | C16 | 35 |
| Printed Circuit Board | C17 | 38 |
| Thermostat | C18 | 42 |
| Cable Assembly | C19 | 52 |
| Sealed System | C20 | 55 |
| Wiring | C21 | 58 |
| Other | C22 | 59 |
| Roof Gasket | C23 | 60 |
| **Configuration** | **D** | **60** |
| **Symptom/Cause Chart** | **E** | **80** |
| Roof Mounted Heat Pumps | E | 80 |
| Basement Heat Pumps | E | 93 |
| Roof Mounted Air Conditioners | E | 102 |
| Basement Air Conditioners | E | 116 |

# Section A - Installation

## A1. AC Voltage

The unit is a 115VAC, 60Hz appliance. The proper operating range is between 103 and 126.5 volts AC. The voltage reading should be taken at the unit power supply leads. One test should be performed when the unit is turned OFF and another with it running under load. If the voltage is not within the proper operating range, it must be corrected before operation of the unit.

**⚠ WARNING**

**This is an energized circuit. Shock can occur if not tested properly. Testing to be done by a qualified service technician.**

Check for proper AC volts at the connections at the units electronic control box on roof mounted units and at the connections at the electric box on basement units.

The dual units (Models 39224 and 39424) have two AC volt circuits. Verify that Circuit 1 is wired into CIR 1 terminal block and Circuit 2 is wired into CIR 2 terminal block. Check for proper AC volts at each terminal block.

### A1a. AC Control Voltage

AC control voltage is supplied by the transformer for the control circuits on the following units: 39025.XXX, 39035.XXX and 39045.XXX. Se Section C14- Transformers on page 34.

## A2. DC Volts

On certain models of electronic controlled air conditioners and heat pumps, DC volts must be supplied to the control board. The operational range is 10 to 16 VDC. If the DC voltage is below 10 VDC, you could experience improper operation of the components within the main board.

### A2a. Analog Control System

A DC voltage supply is wired to the control board. The operating range is 10-16 Volts DC, with a maximum current draw of 0.250 Amps.

To check DC volts, first check the voltage between the red (+12) positive and black (-12) negative, at the connections on the Analog Control Box on the roof top unit.

**FIG. A1**

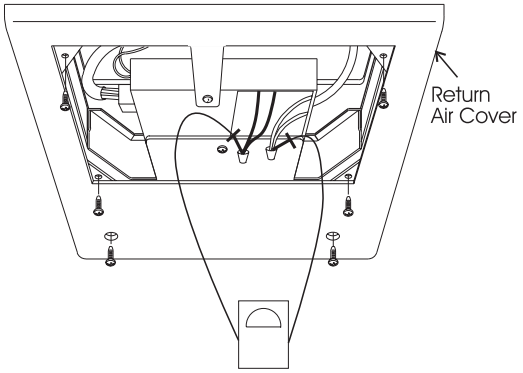


If a furnace is to be operated by the Analog Control System, the furnace thermostat leads are connected to the blue/white striped wires out of the Analog Control Box. The furnace wires can be connected to either wire as polarity is not important. DC voltage is required by the Analog Control Board on one of the two wires for furnace operation.

### A2b. Comfort Control Center System

A DC volt supply is required for the operation of the Comfort Control Center. The operational range is 10 to 30 volts DC. If DC volts are outside of the operating range, you could experience improper or erratic operation. To check DC volts, first check the incoming DC volts between the red (+) positive and black (-) negative, at the connections on the Comfort Control Center control box on roof top units or at the connections at the electric box of basement units.

## A3. Field Wiring

If the unit's compressor or fan fails to operate, chances are it is not receiving proper power. Be sure the power cord is plugged in and fuses ore breakers are ope.

**Note:** Many customers use extremely long power cords that are undersized. If possible, ask the owner to hook up the RV just like it was when the problem occurred. See FIG. A2

**FIG. A2**

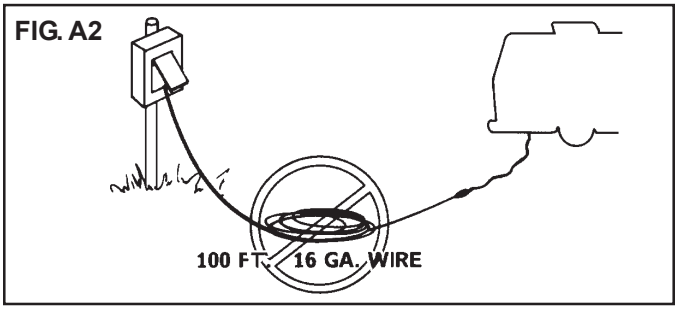


Make note of the wire size and compare it to the chart for wire sizing. See Section A1a - AC Control Voltage.

| CURRENT IN AMPS | WIRE SIZE | | | | | |
|---|---|---|---|---|---|---|
| | 16 | 14 | 12 | 10 | 8 | 6 |
| | LENGTH IN FEET | | | | | |
| 5 | 47 | 76 | 121 | 192 | 216 | 486 |
| 10 | | 38 | 60 | 96 | 153 | 243 |
| 15 | | 25 | 40 | 64 | 102 | 162 |
| 20 | | | 30 | 48 | 76 | 121 |

# Section A - Installation, cont'd.

## A4. Breaker

**⚠WARNING**

**Make sure that the power supply to the unit is disconnected before performing any work on the unit to avoid the possibility of shock injury or damage to the equipment.**

The unit is to be protected by a time delay fuse or HACR (heating, air conditioner, refrigerator) breaker. By taking an amp reading at the unit AC voltage supply line, you can determine if the breaker is tripping prematurely. Place a clamp-on type ammeter around the black wire between the unit and breaker. Turn ON the unit and record the amp draw. If the breaker trips before the rated amperage, replace the breaker.

| MODELS | CIRCUIT PROTECTION | |
|---|---|---|
| | T.D. Fuse | HACR Breaker |
| 39125 (Basement) | 15 amp | 15 amp |
| 39325 (Basement) | 20 amp | 20 amp |
| 39224 (Basement) - Circuit 1 | 15 amp | 15 amp |
| - Circuit 2 | 15 amp | 15 amp |
| 39424 (Basement) - Circuit 1 | 15 amp | 15 amp |
| - Circuit 2 | 15 amp | 15 amp |
| All Rooftop Units | 20 amp | 20 amp |
| 59528.601 | 15 amp | 15 amp |
| 59529.601 | 15 amp | 15 amp |
| 59530.601 | 15 amp | 15 amp |

## A5. Air Box

Improperly installed, the air box can be a source of cooling problems. The air box must be sealed to the ceiling template to prevent the mixing of discharge and return air. This will cause short cycling or frost formation on the inside coil On heat pumps, recirculation can cause the high side pressure to build, tripping the overload and/or breaker. In some instances, the ceiling template is bent when the anchor bolts are overtightened, causing gaps between the air box and the ceiling template. These gaps can be sealed with aluminum tape or a closed cell foam weather strip. The duct connecting the air conditioner or heat pump must be air tight. Use aluminum tape to seal the joints. The thermostat sensing bulb must be properly located to control temperature. If the sensing bulb is left curled against the side of the electric box or used as a ground connection, improper operation will occur. Relocate the sensing bulb in its proper place as indicated in the Installation and Operating Instructions. Check the air filters and clean.

## A6. Ducting

### A6a. Rooftop Units

**Sizing and Design**

The installer of this air conditioner system must design the air distribution system for his particular application. Several requirements for this system MUST be met for the air conditioner to operate properly. These requirements are as follows:

Roof cavity thickness must be between 2.00" and 5.50". This distance is measured between roof and ceiling surface.

The total cross-sectional discharge area of the outlet ducts from the plenum area under the air conditioner must be as follows:

1. 579 & 600 Series 17.5 sq. in.
2. 591, 595 & 630 Series 21.0 sq. in.

**Duct Sizing Requirements as Follows:**

| | Min. | Max. |
|---|---|---|
| Duct Depth (591/595/630 Series) | 1-1/2" | 2-1/4" |
| (579/600 Series) | 1-1/4" | 2-1/4" |
| Duct Width | 7" | — — |
| Total Duct Length | 12 ft. | 36 ft. |
| Duct Length (short run) | 1/3 Total Length | |

**Register Requirements as follows:**

| | Min. | Max. |
|---|---|---|
| Distance from Duct End | 5" | 8" |
| Distance from End of Elbow | 15" | — — |
| Distance between Registers | 24" | — — |
| Total Number Required/AC | 4 | 8 |
| Number Required per Run/AC | 2 | — — |
| Free Area per Register | 14 sq. in. | — — |

The duct material must meet or exceed any agency or RVIA Standard that may be in existence at the time the RV is produced.

**⚠CAUTION**

**It is the responsibility of the installer of this system to ensure the ductwork will not collapse or bend during or after the installation.**

All discharge air ducts must be properly insulated to prevent condensation from forming on their surfaces or adjacent surfaces during operation of the air conditioner or heat pump. This insulation must be R-7 minimum.

**Note:** The Dometic Corporation will not be held liable for roof, structural or ceiling damage due to improperly insulated or sealed ductwork.

Return air opening must have 40 sq. in. minimum free area including the filter.

Return air to the air conditioner must be filtered to prevent dirt accumulation on air conditioner cooling surface.

Total System Pressure must be between the following:
- 0.55 to 0.90 in. W.C. for 579 Series
- 0.40 to 1.10 in. W.C. for 591, 595 & 630 Series
- 0.12 to 0.65 in. W. C. for 600 Series

This is determined with the air conditioner blower operation on high speed and return air filter and grille in place.

The Dometic Corporation recommends the basic configuration shown below for installing this Air Conditioner System. We have found by testing that this configuration works best in most applications of the Air Conditioner/Heat Pump System.

It is the responsibility of the installer of this system to review each RV floor plan and determine the following:

A. Duct Size
B. Duct Layout
C. Register Size
D. Register Locations
E. Thermostat Location

These items must be determined in conjunction with the Air Distribution System Sizing and Design Requirements listed.

**Note:** Alternate configurations and methods may be used which still allow the air conditioner to operate properly. However, these alternate configurations and methods must be approved by The Dometic Corporation in writing.

**The following instructions are based upon the use of Dometic Return Air Kit.** The electronic control kit has mounting bolts supplied for use with this Kit. See FIG. A3.

Before preparing the ceiling opening, the type of system options must be decided upon. If a remote sensor is to be used, provisions must be made for it. If the load shed option (Energy Management System feature) is to be used, wires must be run from the load shed control to the Dometic A/C. If a furnace is to be connected, wires must be run from the furnace to the Air Conditioner.

The 14-1/4" x 14-1/4" (±1/8") opening must be framed to seal off the roof cavity. Holes used to route electrical wiring should be sealed. The 14-1/4" x 14-1/4" (±1/8") opening is part of the return air duct and must be finished in accordance with NFPA Standard 501C, Standard for Recreational Vehicles, Section 2-7.

The most commonly found installation problem is the improper sealing of the 14-1/4" x 14-1/4" (±1/8") opening in the roof cavity. The cooled discharge and warm return air are mixed in the roof cavity and produce conditions that are excellent for frost production.

Even the best framing job will not stop frost from occurring if the cold air discharge is allowed to enter into the return air portion of the 14-1/4" x 14-1/4" (±1/8") opening. See FIG. A4.

**FIG. A4**

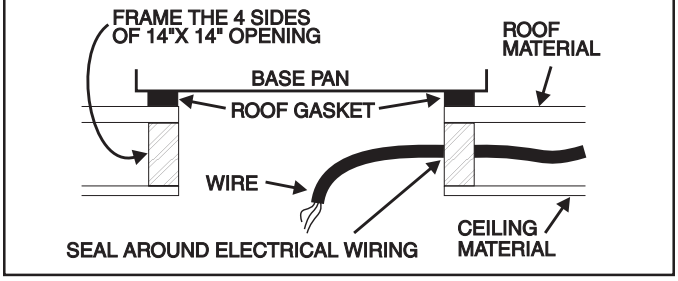


Duo-Therm's return air kits are designed to be installed tightly to the bottom of the base pan and ceiling template. Insulation supplied in the kit not only stops condensation from forming on the divider plate, but prohibits air leaks as well. The insulation is purposely oversized to be attached to the sides of the 14-1/4" x 14-1/4" (±1/8") opening and the base of the air conditioner and ceiling template. Make sure the data plate does not get covered with insulation. See FIG. A5.

**FIG. A5**

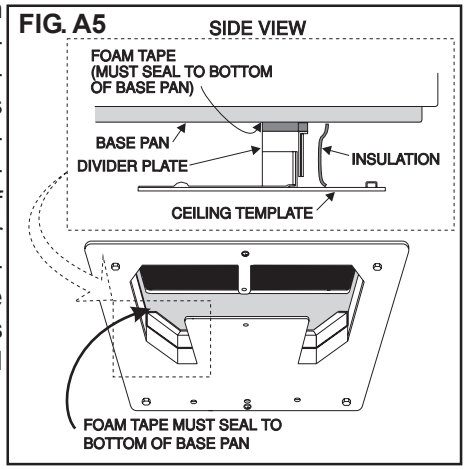


**FIG. A3**

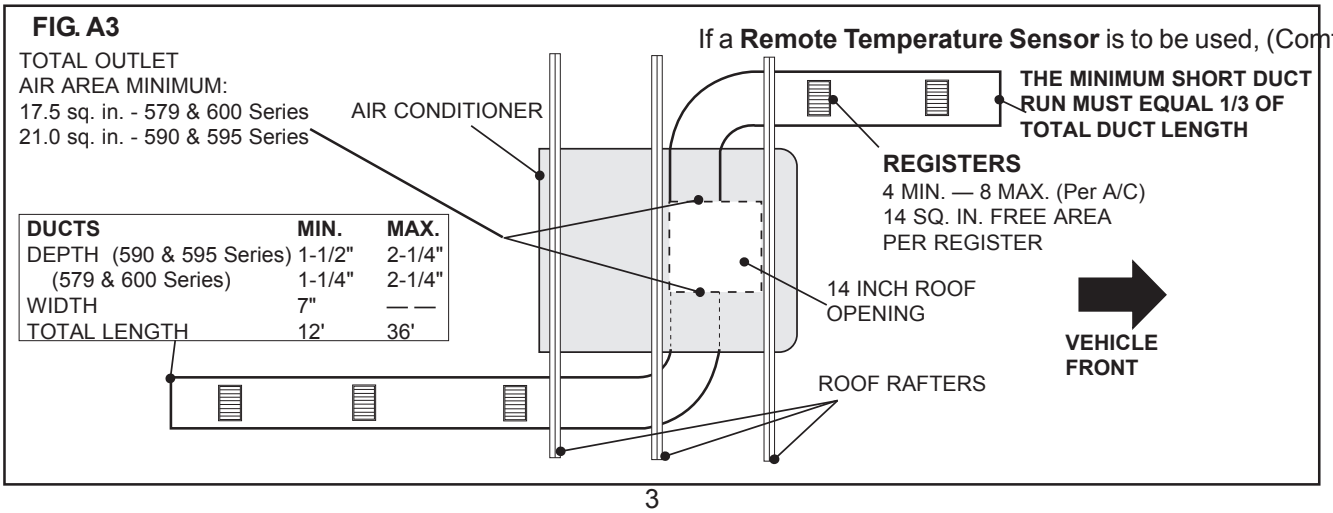


| DUCTS | MIN. | MAX. |
|---|---|---|
| DEPTH (590 & 595 Series) | 1-1/2" | 2-1/4" |
| (579 & 600 Series) | 1-1/4" | 2-1/4" |
| WIDTH | 7" | — — |
| TOTAL LENGTH | 12' | 36' |

If a **Remote Temperature Sensor** is to be used, (Comfort

# Section A - Installation, cont'd.

FIG. A6

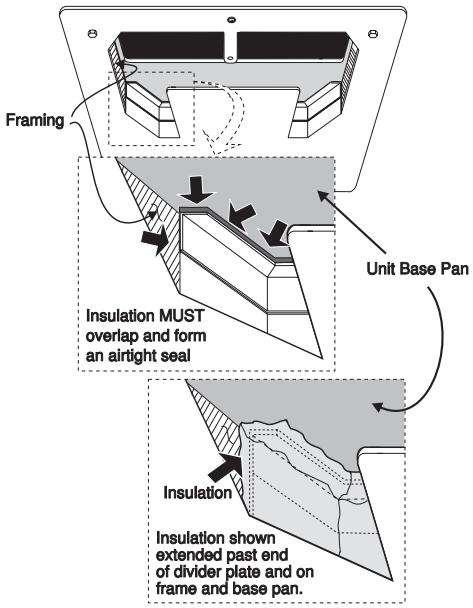


Control Center configuration, page 16) the connector end must be routed to the roof opening of the system which it will control. Make sure that at least 15" of the sensor cable extends into the roof opening. If a furnace is to be controlled by the system, the two furnace thermostat leads must be routed to the roof opening of the air conditioner that will control it. Make sure at least 15" of the furnace thermostat wires extend into the roof opening. If an Energy Management System - EMS (load shed) is to be used with the control, two wires must be routed to the roof opening of the zone to be managed. The signal required for this function is a normally open relay contact. When the EMS calls for the compressor to shut off, the relay contacts should close. Make sure that at least 15" of the EMS wires extend into the roof opening.

FIG. A7

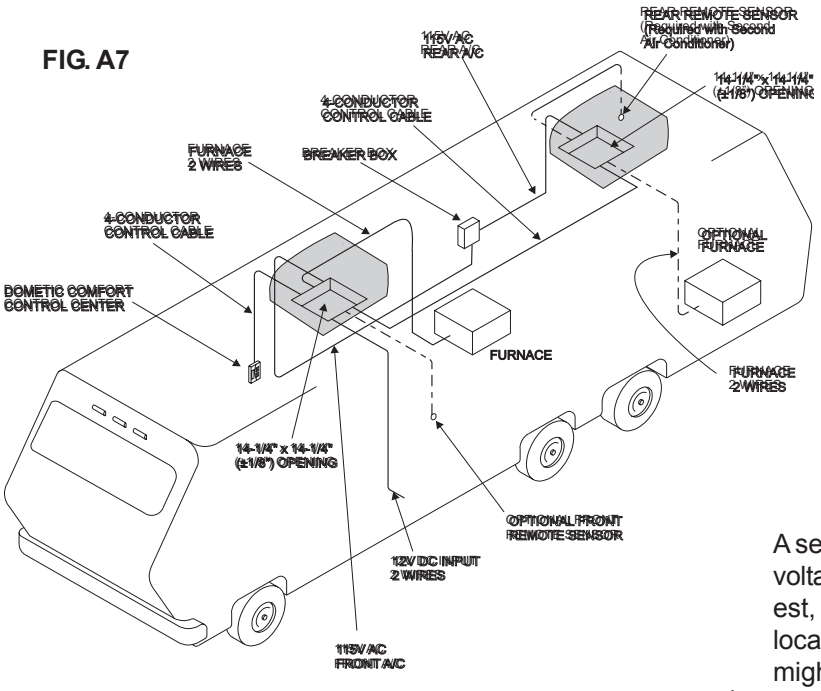


Route a copper 12 AWG, with ground, 115 VAC supply line from the fuse or circuit breaker box to the roof opening.

a. This supply line must be located in the front portion of the 14-1/4" (±1/8") opening.
b. The power supply **MUST** be on a separate Time Delay Fuse or HACR Circuit Breaker.
c. Make sure at least 15" of supply wire extends into the roof opening. This ensures easy connection at the Junction Box.
d. Wiring must comply with all National, State and Local Wiring Codes.
e. Use a steel sleeve and a grommet or equivalent methods to protect the wire where it passes into the opening.

Route a dedicated 12 VDC supply line (18-22 AWG) from the RV's Converter or Battery to the roof opening.

a. This supply line must be located in the front portion of the 14-1/4" (±1/8") opening.
b. Make sure that at least 15" of supply wire extends into the roof opening.
c. In a multiple zone installation, this wiring is required in only one of the 14-1/4" (±1/8") openings.

Route a 4-conductor telephone cable from the **Comfort Control Center™** mounting position into the 14-1/4" (±1/8") roof opening. Make sure that at least 15" of the wire extends into the roof opening and 6" extend from the wall at the mounting position of the **Comfort Control Center™**. In the event that other A/C's are to be installed (additional zones) and additional 4-conductor telephone cable must be routed to the other A/C's. Make sure that at least 15" of the wire extends into each of the roof openings. See FIG. A8.

FIG. A8

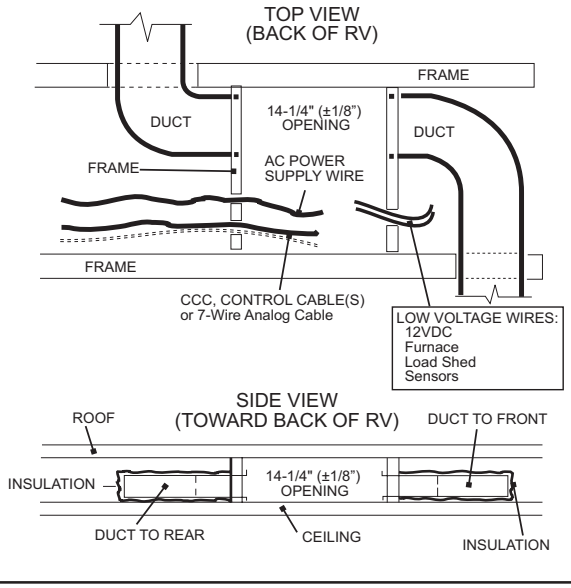


A seven-conductor cable, 18-22 AWG is to be used for low voltage connections for Analog Controls. Choose the shortest, direct route from the 14" opening to the thermostat location selected. Consider where screws, nails or staples might contact the cable. See FIG. A8.

Leave approximately 6" of cable extending through the wall for connection to thermostat. Leave approximately 10" of cable extending into the 14-1/4" (±1/8") opening for connection at Relay Kit. See A7 Thermostat Location, page 12.

**If System if to control a gas furnace:**
Route two 18 AWG from the furnace to 14-1/4" (±1/8") opening at this time.

FIG. A9

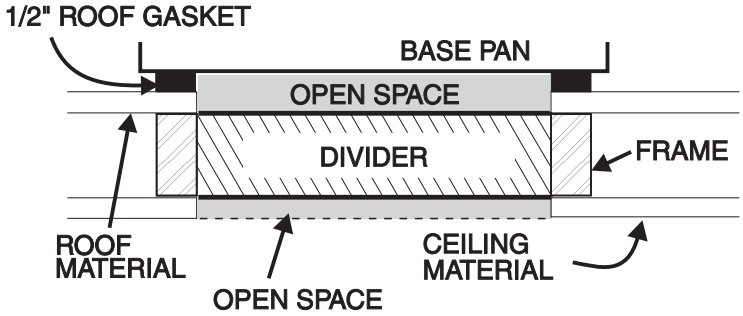


In some installations, the OEM supplies their own return air kits. Sometimes both the return and the discharge air are ducted to and from the 14-1/4" x 14-1/4" (±1/8") opening. In some cases the bottom of the 14-1/4" x 14-1/4" (±1/8") opening is covered with ceiling material.

In this type of installation the 14-1/4" x 14-1/4" (±1/8") opening is divided. If the divider only fills to the thickness of the ceiling cavity, an air gap may be created both on the top and bottom of the thickness of the roof gasket, roof or ceiling material. A gasket, etc., must be used to fill up the open space to reduce recirculation. See FIG. A9.

Another method of connecting the discharge air to the coach's main duct used Duo-Therm's return air kit. It uses half of the 14-1/4" x 14-1/4" (±1/8") opening as a discharge plenum. If the duct opening is not clean, restriction of air can cause the coil to freeze. The opening of the duct should be as large as possible to make the air distribution better in the coach and reduce freeze-up. See FIG. A10.

The final method of installation dumps the discharge air directly into the RV's main duct. The duct is routed through the 14-1/4" x 14-1/4" (±1/8") opening. A duct adapter is used to connect the air conditioner to the main duct. If this connection is not made properly, cold air can migrate back into the return air path and make conditions right for freeze-up. Be sure the duct adapter is sealed to the main duct and air conditioner. See FIG. A11.

FIG. A10

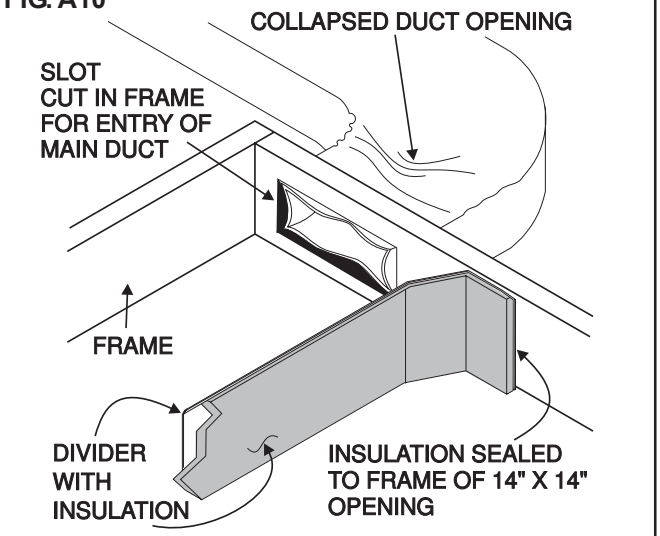


FIG. A11

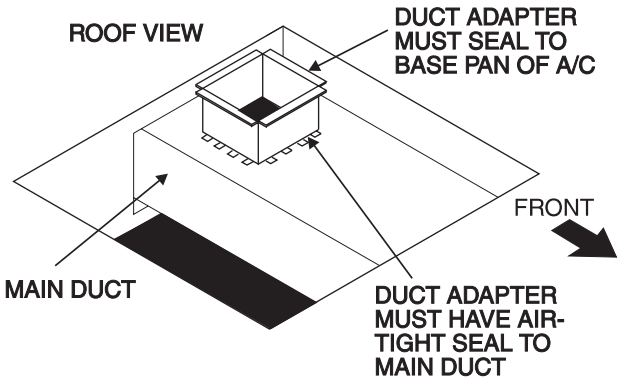

# Section A - Installation, cont'd.

Restrictions at the connection to the air conditioner is the most common cause, but blockage in the main duct runs can also cause freeze-up. Blockages commonly occur in the areas where the duct changes direction. Other obstacles that can cause a change in the duct (air) path include rafters, vent pipes, wire bundles, etc. See FIG. A12.

A good way to check for duct blockage is with a flashlight and a mirror. Remove ceiling register cover to allow a flashlight to be put in the duct and use a mirror to view the flashlight from the next register opening. A blockage will be visible in the mirror. See FIG. A12.

Duo-Therm has available a quick cool return air kit that will allow the cooled air to come directly out of the air conditioner. This will bypass any restrictions in the coach duct system. (Part No. 3105958.007 Shell White, 3105958.015 Polar White).

If the main duct in the vehicle is undersized, the volume of air flowing through the ducts will decrease. The coil temperature will also drop because not enough air is moving through it. The requirements for proper duct size are shown in FIG. A13.

Up to this point we have mainly covered the discharge side; however, restrictions of the return air can result in frost buildup. The Duo-Therm air conditioner requires a minimum of 40 square inches of **FREE AREA.**

**FREE AREA** - is the opening that remains in a grill or louvered panel after the restrictions are taken away. For example, an opening of 10 x 20 inches has 200 square inches. When this opening is covered with a grill that is 56 percent open, the FREE AREA is (200 x .56), 112 square inches.

Dometic return air kits are designed to have the correct free area; however some manufacturers use their own grills. If a manufacturer's grill is used, it must use the above formula to make sure the return air is sufficient to reduce the chances for freeze-up. The filter material must also be considered as a restriction and subtracted from the FREE AREA. See FIG. A14.

Main ducts running through the 14-1/4" x 14-1/4" (±1/8") opening must leave space between the duct and return air grill or duct and bottom of the air conditioner. See FIG. A15, A16, A18.

**FIG. A12**

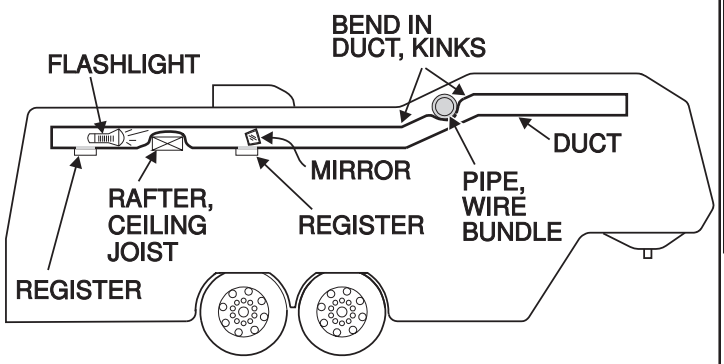


**FIG. A14**

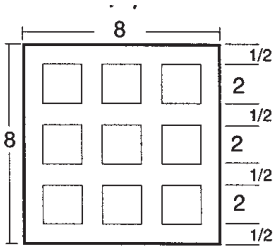


**EXAMPLE OF HOW TO DETERMINE FREE AREA OR % OPEN AREA:**

**TOTAL AREA = 8 X 8 = 64**

**FREE AREA = 2 X 2 X 9 openings**
**= 36**

**% OPEN AREA = $\frac{36}{64}$ = 56%**

**FIG. A13**

**"S" PATTERN DUCT SYSTEM**

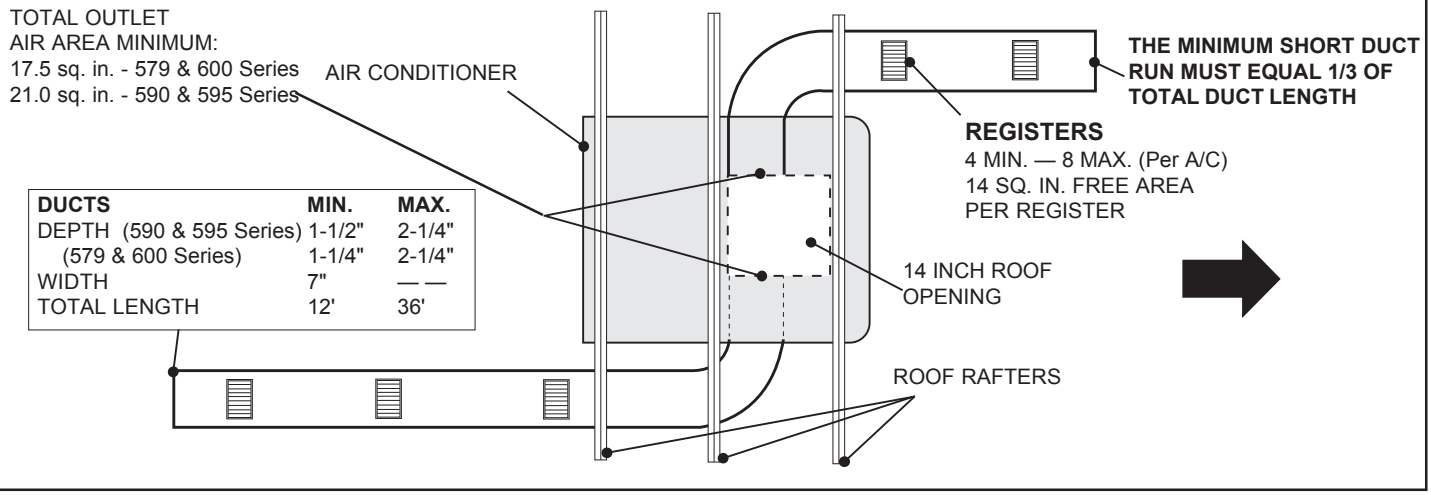


| DUCTS | MIN. | MAX. |
|---|---|---|
| DEPTH (590 & 595 Series) | 1-1/2" | 2-1/4" |
| (579 & 600 Series) | 1-1/4" | 2-1/4" |
| WIDTH | 7" | — — |
| TOTAL LENGTH | 12' | 36' |

FIG. A15

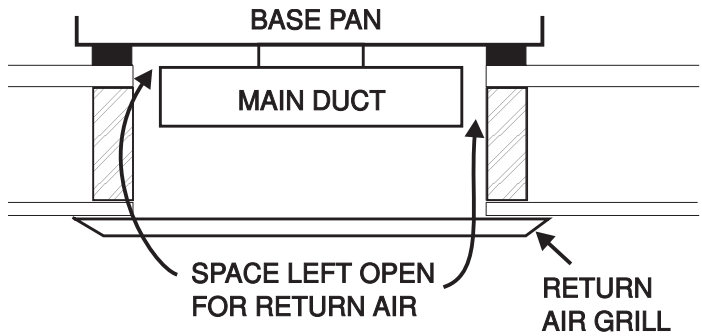


FIG. A16

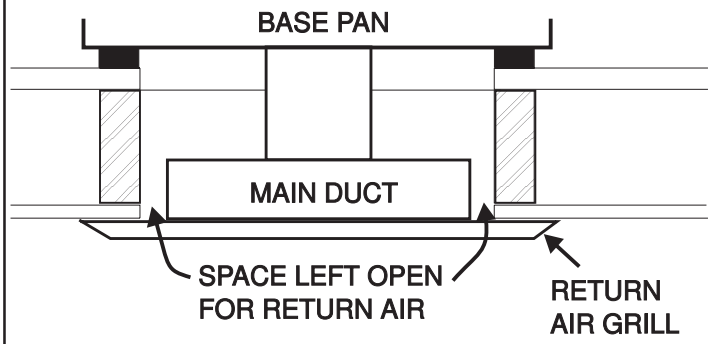


FIG. A17

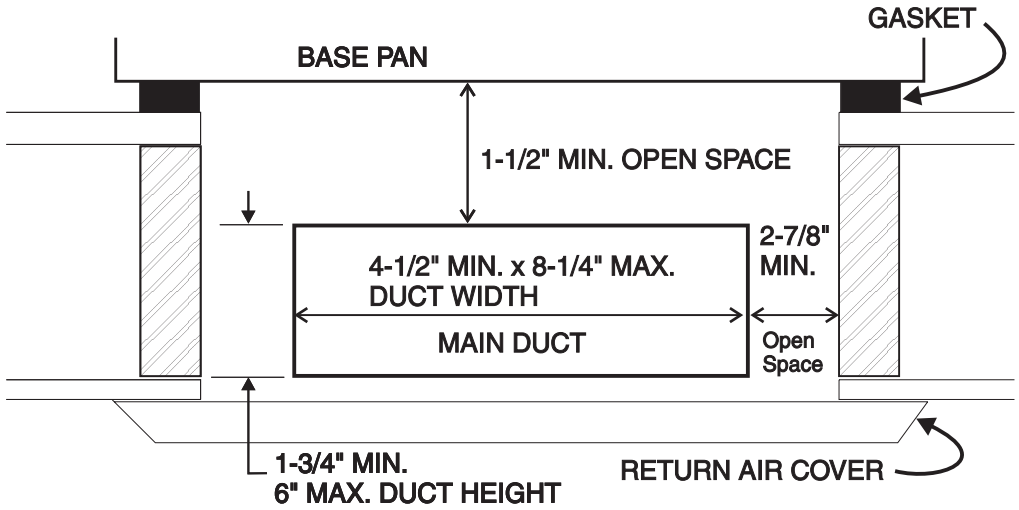


The gap between the top and the main duct to the bottom of the air conditioner should be a minimum of 1-1/2". See FIG. A17 & A18.

If the return air is ducted into the 14-1/4" X 14-1/4" (±1/8") opening, the duct must be equal to the 40 sq. inches that are needed by the air conditioner. Grill or registers used ing this duct must be equal to or greater than the duct in square inches.

The control system used by Duo-Therm Air Conditioner is designed with a low temperature switch that will shut off the compressor and allow air to flow through the coil to melt the frost. A properly operating cold control may allow a slight coating of frost to form on the evaporator coil before it turns off the compressor. If the cold control is not installed in its intended mounting locations, frost buildup can block all air flow through the evaporator coil and stop cooling inside the RV. The cold control has clips that allow it to be snapped onto the turn/bends of the evaporator coil. **See FIG. A20 & A21 for the correct location.**

FIG. A18

Bottom/Top View of 14"x 14" Opening

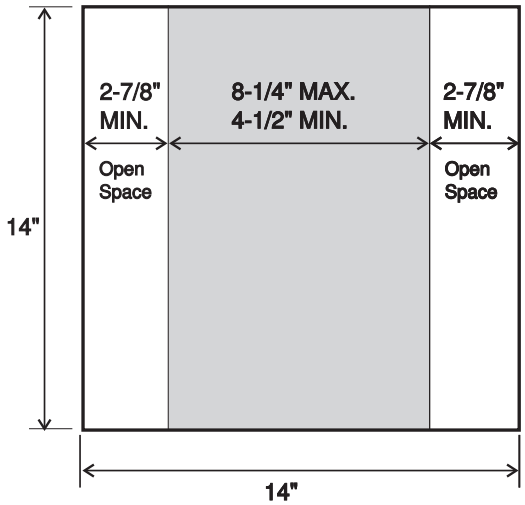

# Section A - Installation, cont'd.

FIG. A19

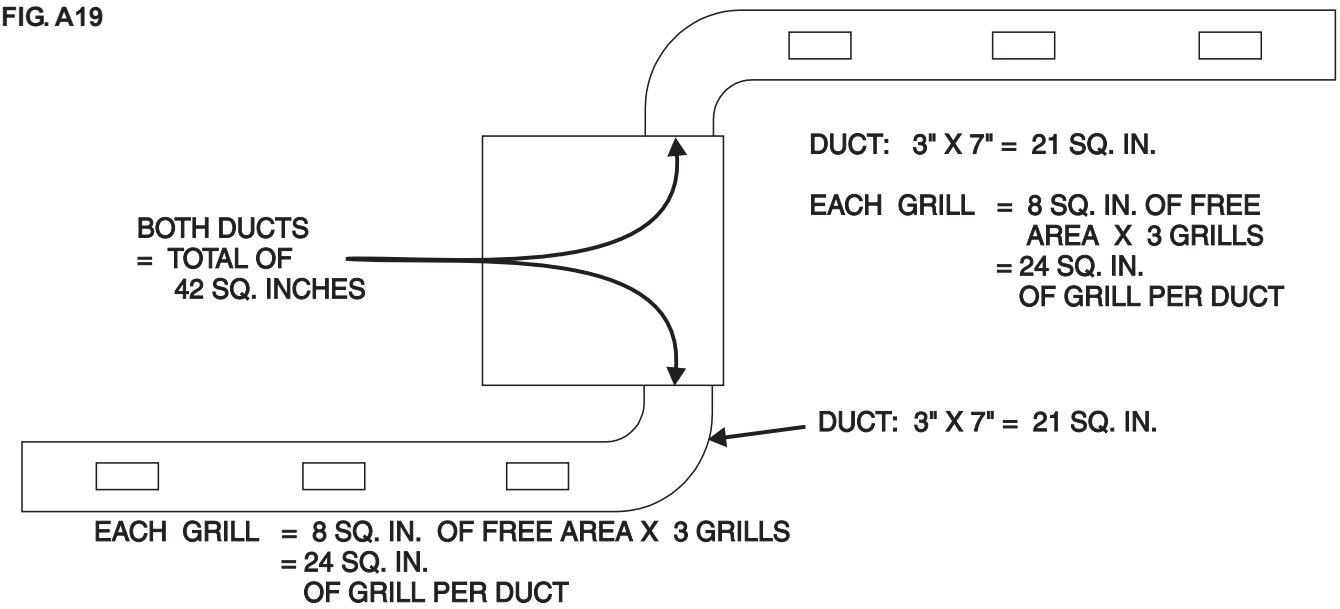


**Freeze Control Installation**
**579, 590 & 595 Series:**

a. Snap freeze control into place on return bend located at left side of evaporator coil as follows:
   1) Locate "D" shaped notch in flange of evaporator coil.
   2) Place the horseshoe end of freeze control through this notch and snap onto coil return bend. When positioned correctly, control wires will be 90° to direction of coil fin surface. See FIG. A20

**Note:** Freeze control is not used on heat pump coils. Some will have the "D" slot in the coil header.

**Freeze Control Installation**
**600 Series:**

a. Snap the freeze control into place on return end located at right side of evaporator coil as follows:
   1) Locate vertical return bend at lower right of evaporator coil.
   2) Place the horseshoe end of freeze control onto this coil return bend and snap into place. When positioned correctly, control wires will be 90° to direction of coil fin surface. See FIG. A21.

**Note:** Freeze control is not used on heat pump coils, some

FIG. A20 579, 590 & 595 SERIES

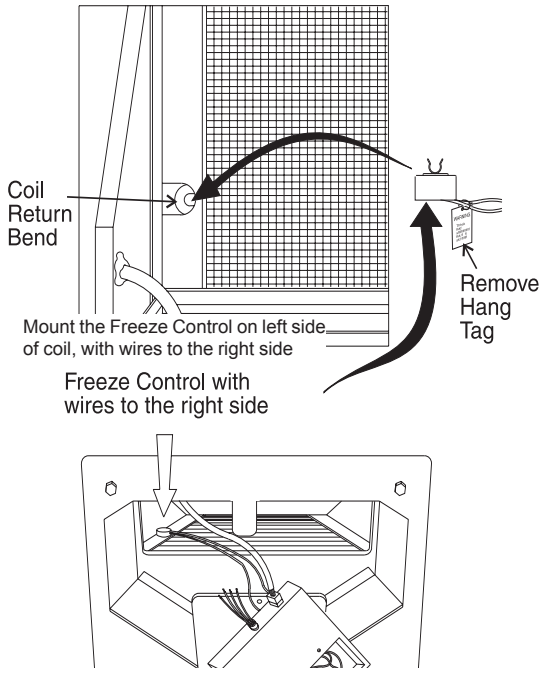


FIG. A21 600 SERIES

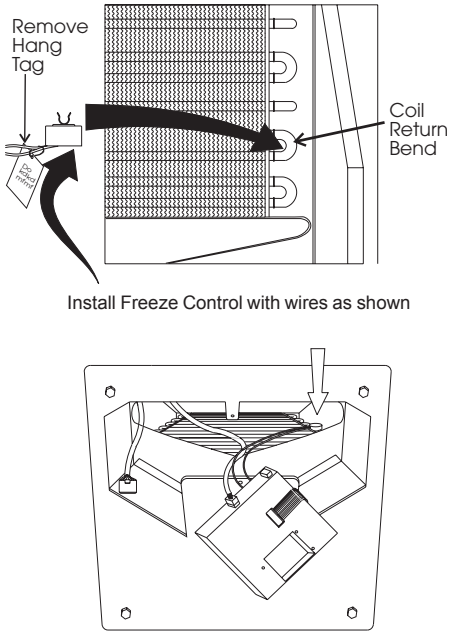

will have the "D" slot in the coil header.

## A6b. Basement Units
## Models 39335 and 39125

**Outdoor Section:**

The Condenser coil is designed to have a fresh supply of air. If skirting is installed, allow a louvered grill with 330 square inches for supply air and a louvered grill on opposite side of coach (330 square inches) for discharge air.

**⚠ CAUTION**

**Do not totally enclose the underside of the unit. Air circulation prevents heat from building under unit and your system will perform as designed.**

The condenser section is a "blow-through" type. When the face of the coil is positioned behind a louvered or other type of restrictive opening, the FREE AREA of the opening must be **at least 260 square inches.**

**FREE AREA -** is the opening that remains in a grill or louvered panel after the restrictions are taken away. For example, an opening of 10 x 20 inches has 200 square inches. When this opening is covered with a grill that is 56 percent open, the FREE AREA is (200 x .56), 112 square inches. Expanded and perforated metal grills in general vary from

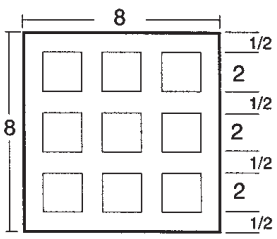


**EXAMPLE OF HOW TO DETERMINE FREE AREA OR % OPEN AREA:**

| | | | | |
|---|---|---|---|---|
| TOTAL AREA | = | 8 X 8 | = | 64 |
| FREE AREA | = | 2 X 2 X 9 openings | | |
| | = | 36 | | |
| % OPEN AREA | = | $\frac{36}{64}$ | = | 56% |

30 percent to 60 percent open. Be certain that **260 square inches** of FREE AREA is available to the face of the condenser.

**Note:** Service access must always be supplied either as clearance or as a defined access panel.

**Mounting**

Vibration eliminators are supplied to prevent the transmittance of vibration into the living area.

The air conditioning unit may be attached to rails beneath the vehicle, attached to the frame, or mounted directly to the floor of some vehicles.

Unit should be mounted with a tilt toward the rear (condenser) a half-bubble using a level. Unit rear should be 1/4" lower than the front.

**Service Access**

Be sure **NOT** to block the inlet or discharge air, or service access, when mounting.

**Indoor Section:**

**Clearances**

The minimum clearances to the evaporator are zero inches to the bottom, top, left and right sides. Access to the electrical connections and drain connection must be provided when making the installation.

**⚠ CAUTION**

**Be sure to allow sufficient room to service the electrical components.**

**Inlet Air**

The evaporator section must have free access to room air. **A minimum or 180 square inches** of FREE AREA opening is required. Where the return air must be provided through louvers or mesh scree, the FREE AREA percentage of the material used shall be taken into consideration when making this determination. An example of how to determine FREE AREA is included under "**Outdoor Section".**

**Grills and Registers**

**Note:** The return air grill must have the same square surface as the coil face (15"H x 17"L).

For each air conditioning system, there must be a return grill to bring cabin air back into the unit. There must also be at least four discharge grills per unit.

Each return air grill must be filtered and accessible for cleaning and replacement.

**Outlet Air**

The central air conditioning unit is designed to use a discharge air duct with a static pressure of .10 to .25 inches water column. Proper duct size is necessary to maintain proper air flow without loss of static pressure and provide good air circulation.

All air handling ducts must be properly insulated to prevent condensation forming on their surface during operating. A vapor barrier must also be supplied on the outer surface of the insulation to prevent moisture from traveling through the insulation and condensing on the cold ductwork.

**Note:** If the air conditioning unit is attached to the central furnace, a damper must be installed at the furnace outlet to prevent cold air from circulating through the furnace heat exchanger, unless furnace is so equipped to utilize the built-in furnace relay.

# Section A - Installation, cont'd.

FIG. A22

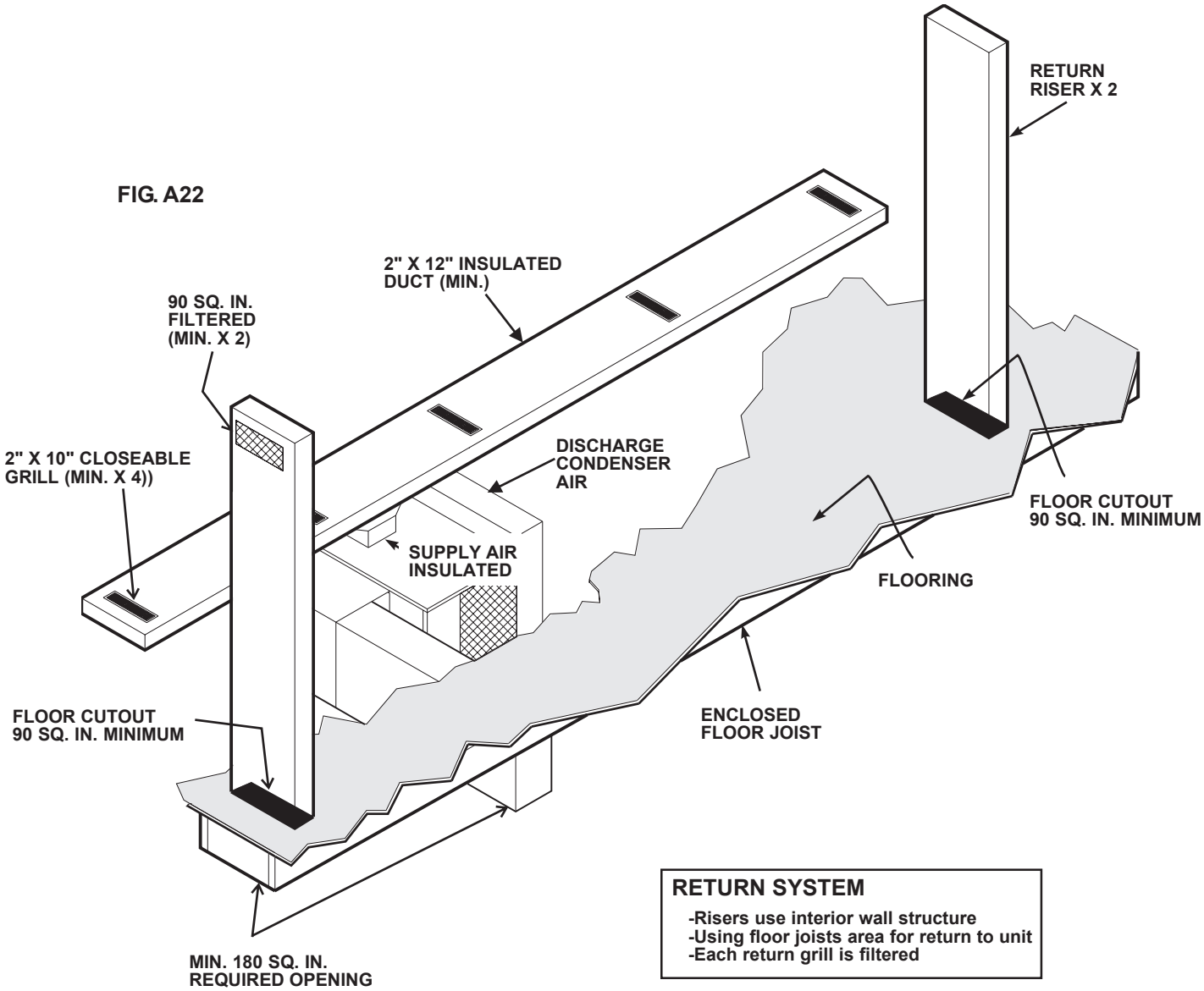


**RETURN SYSTEM**

- -Risers use interior wall structure
- -Using floor joists area for return to unit
- -Each return grill is filtered

## Models 39224 and 39424

**Condenser Section:**

**Supply Air**

The inlet of the condenser coil should be positioned so that it draws air from outside the vehicle. **Special care must be taken to prevent the discharge air from recirculating to the inlet of the condenser coil.** Shields should be added to ensure fresh air supply.

**⚠ WARNING**

**Do not install the condenser where the fan will draw air from the exhaust of the vehicle, a motor generator set, transmission, road heat or ANY other heat producing source.**

FIG. A23

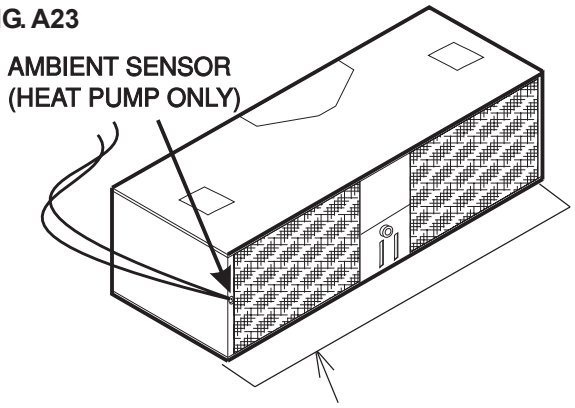


FIELD INSTALLED SHIELD THAT WILL PREVENT RECIRCULATION OF CONDENSER AIR.

The condenser section is a "draw-through" type. When the face of the coil is positioned behind a louvered or other type of restrictive opening, the FREE AREA of the opening must be **at least 460 square inches.**

**FREE AREA -** is the opening that remains in a grill or louvered panel after the restrictions are taken away. For example, an opening of 10 x 20 inches has 200 square inches. When this opening is covered with a grill that is 56 percent open, the FREE AREA is (200 x .56), 112 square inches.

Expanded and perforated metal grills in general vary from 30 percent to 60 percent open. Be certain that 460 square inches of FREE AREA is available to the face of the condenser.

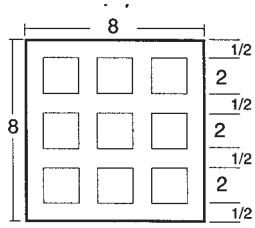


**EXAMPLE OF HOW TO DETERMINE FREE AREA OR % OPEN AREA:**

**TOTAL AREA = 8 X 8 = 64**

**FREE AREA = 2 X 2 X 9 openings**
**= 36**

**% OPEN AREA = $\frac{36}{64}$ = 56%**

**Note:** Service access must always be supplied either as clearance or as a defined access panel.

**Clearances**

The air conditioning unit clearances depend on:

1. Inlet air access used
2. Discharge air duct arrangement
3. Return air duct
4. Storage compartment location and design

A one (1) inch clearance is required on three (3) sides of the air conditioner if the top return is used. When using the side access for return, please allow a minimum of eight (8) inches for the return air duct. Access to the electrical connections must be provided when making the installation.

**Evaporation Section:**
**Inlet Air**

The evaporation section must have free access to room air. A minimum of 128 square inches of FREE AREA opening is required. Where the return air must be provided through louvers or mesh screen, the FREE AREA percentage of the material used shall be taken into consideration when making this determination. An example of how to determine FREE AREA is included under **Condenser Section.** See FIG. A24.

**FIG. A24**

**RETURN SYSTEM**

Return to be 6 ft. minimum from floor.
Use wall structure for delivery to basement area.
Return grille must be filtered.

Minimum return required per duct sizing for unit to perform within Engineering specifications. See Chart below:

| DUCT SIZE | MINIMUM | MAX. |
|---|---|---|
| 40 IN. ² | 128 IN. ² | 189 IN. ² |
| 60 IN. ² | 128 IN. ² | 189 IN. ² |

| INSULATED DUCT | |
|---|---|
| Minimum | Maximum |
| 40 IN. ² | 60 IN. ² |

(3 " depth Min.)

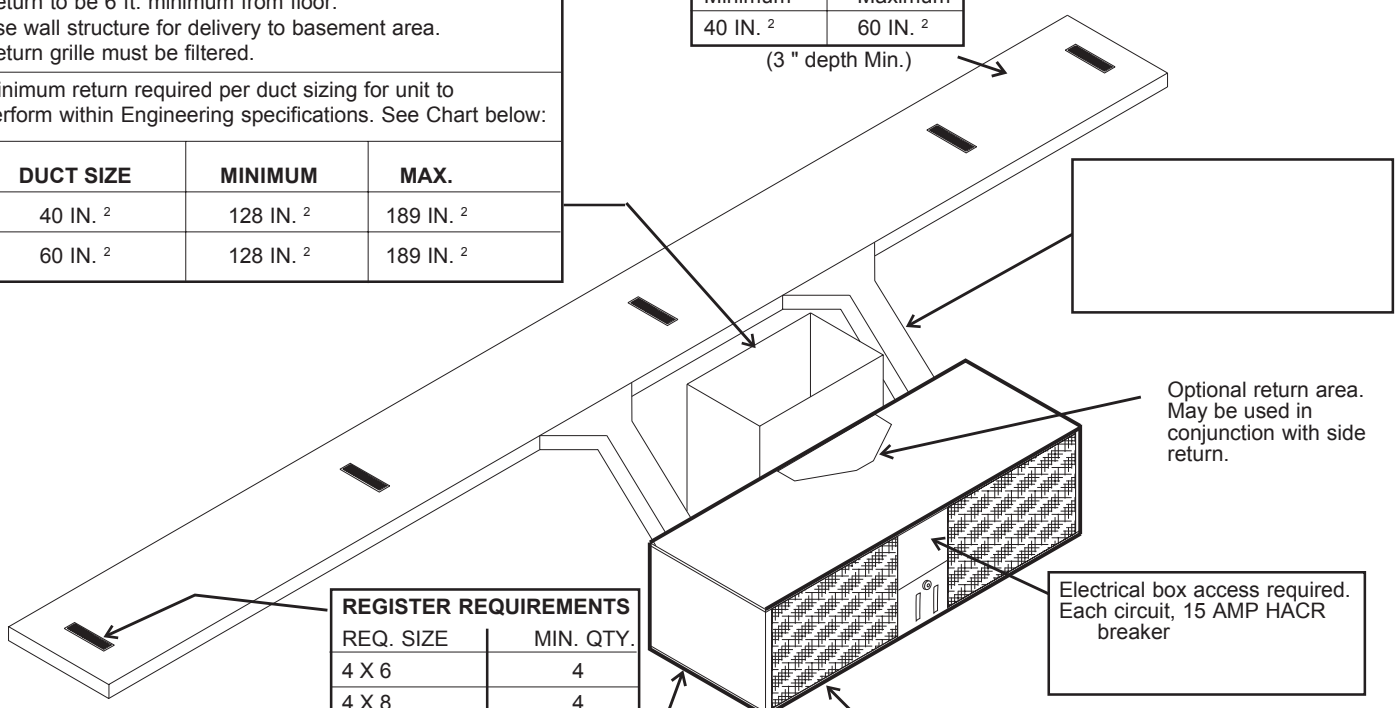

Optional return area. May be used in conjunction with side return.

Electrical box access required. Each circuit, 15 AMP HACR breaker

Condenser inlet air 2 places.

Condenser air outlet ( X2 in bottom)
Must be isolated from condenser inlet air.

**REGISTER REQUIREMENTS**

| REQ. SIZE | MIN. QTY. |
|---|---|
| 4 X 6 | 4 |
| 4 X 8 | 4 |
| 4 X 10 | 4 |
| 4 X 12 | 4 |

**ADDITIONAL REQUIREMENTS**:
Damper required in furnace.
Vibration isolators should be used at each mounting point.
12 VDC required for Comfort Control operation.

**Grills**

**Note:** The Return air grill must have the same square surface as the return air duct.

1. For each air conditioning system, there must be a return grill to bring cabin air back into the unit. There must also be at least four discharge grills per unit.
2. Return grills must be mounted in front of the evaporator. If this is not possible, make sure there is nothing blocking the air flow from the grill to the evaporator.
3. The unit must have a return filter between the grill and the unit. This filter must be accessible for periodic cleaning.

**Outlet Air**

The air diffusion system, supplied by the installer, must be sized to maintain a static pressure at the blower outlet between .4 and 1.2 inches water column.

All air handling ducts must be properly insulated to prevent condensation forming on their surface during operation. A vapor barrier must also be supplied on the outer surface of the insulation to prevent moisture from traveling through the insulation and condensing on the cold ductwork. See section A6a - Rooftop Units.

# A7. Thermostat Location

**The thermostat location is very important for balanced temperature control in any RV.**

Today's interior design has become both cosmetically more appealing and more efficient in its use of storage space. These improvements have generated complex interior space requirements which, in turn, have caused many RV's to become a maze for heating and air conditioning circulation.

The heating system is usually mounted close to floor level and consists of one or more furnaces. The air conditioner(s) is mounted on the roof with a different air distribution system. It is very important to locate the thermostat and remote sensors in areas that have good air movement. This may be difficult because what works well for heating may not work well for air conditioning.

The thermostat or remote sensors must be placed in a location with good air movement. Placing a thermostat or sensor under a cabinet or in a corner will result in a large fluctuation in the temperature. See FIG. A25.

**FIG. A25**

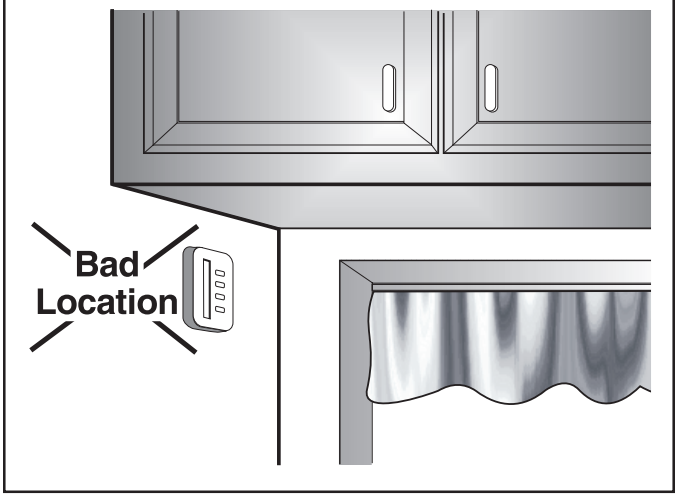


The proper location for the thermostat or remote sensor is 54" from the floor and on an inside wall. It should be located where it cannot be affected by heat from the sun, lamps, oven, etc., or other sources of draft. Locations close to entry doors and windows should be avoided. The discharge from registers blowing directly on the thermostat or remote sensor can cause the system to short-cycle and should be avoided. See FIG. A26.

**FIG. A26**
**Examples of Bad Thermostat Locations**

| | |
|---|---|
| 1, 3, 4 | Near Heat Sources |
| 2 | Near Drafts or Heat source |
| 5, 6 | Near Drafts |
| 7 | On an Outside Wall |

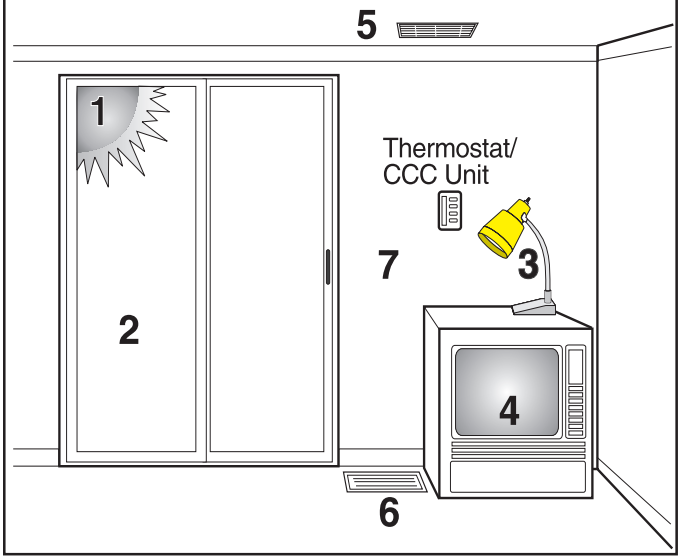

When the floor plan or interior design of an RV changes, Dometic suggests trying several locations for the thermostat or remote sensor to determine the best location for mounting. Both heating and air conditioning should be tested, especially when using different duct systems and the same thermostat. When the proper thermostat or remote sensor location is determined, this location can be used on other RV's with the same basic plan. See FIG. A27.

**FIG. A27**
**Example of**
**Good Thermostat Location**

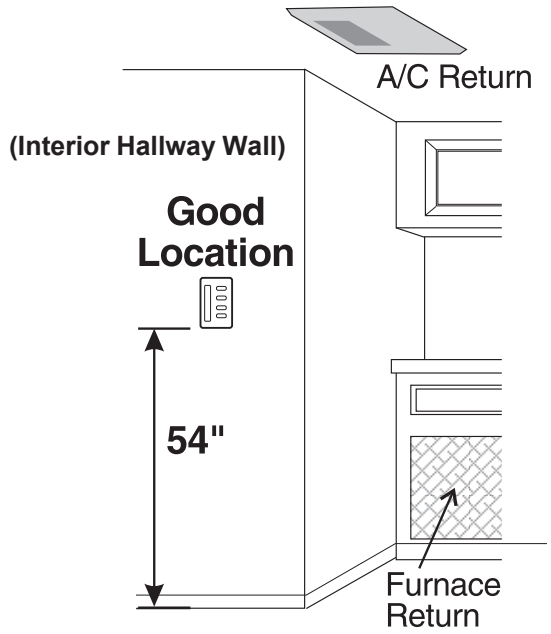

# B. Operation

The recreational vehicle manufacturer has equipped the vehicle with Duo-Therm's Air Conditioner. The ability of the unit to maintain the desired inside temperature depends on the heat gain of the RV. Some preventative measures can be taken by the occupants of the RV to reduce the heat gain and improve the performance of the unit. During extremely high outdoor temperatures, the heat gain of the vehicle may be reduced by:

1. Parking the RV in a shaded area.
2. Using window shades (blinds and/or curtains).
3. Keeping windows and doors shut or minimizing usage.
4. Avoid use of heat producing appliances.
5. Starting the unit early in the morning and giving it a "head start" on the expected high outdoor temperatures will greatly improve its ability to maintain the desired indoor temperature.

The operating instructions can change from one model to another.

Be sure you are familiar with the proper operating instructions for the specific model of air conditioner you are diagnosing. An installation and operating manual is packaged with each air conditioner system.

# B1. Air Conditioners

## B1a. Mechanical Controls

This type of air conditioner has an air distribution box that has a mechanical selector switch and thermostat installed in it.

**Controls**

The Selector Switch has eight positions including "OFF". This controls fan speed, heating mode and cooling modes.

The Thermostat controls the temperature range from 65°F on the coldest side to 90°F on the warmest side. In the cooling mode, the compressor ON/OFF is controlled by the thermostat setting. See FIG. B1.

**FIG. B1**

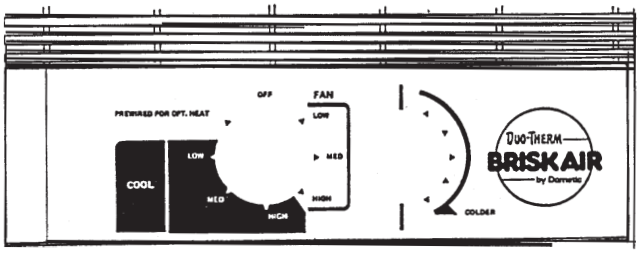


**Mechanical Cooling Operation**

Set the thermostat at the desired temperature level. Select the fan speed that best satisfies your needs. See FIG. B1.

a. **HIGH COOL** - Selected when maximum cooling and dehumidification is required.
b. **MED. COOL** - Selected when normal or average cooling is required.
c. **LOW COOL** - Selected when room is at desired comfort level and needs to be maintained. Normally this speed is used for nighttime operation.

**Note:** The blower runs continuously to circulate air and maintain an even temperature. The compressor will come on as cooling is required to maintain the selected temperature level.

**⚠ CAUTION**

**After shutting the air conditioner down with either selector switch or thermostat, wait at least two (2) minutes before restarting. This allows the refrigerant pressure to equalize and compressor to restart easily.**

**Fan Operation**

This will circulate the air in your RV without cooling or heating. There are three positions: HIGH FAN, MED. FAN or LOW FAN to select from, depending upon personal choice.

**Heating Operation**
**(With Optional Heat Kit Installed)**

**Note:** This electric heater will not replace a furnace for heating your RV in cold weather. The intent is to remove the chill on cool days or mornings.

1. Turn the selector switch to "OPT. HEAT".
2. The heater will come on and begin heating.
3. When desired temperature level in RV is reached, move the selector switch to off position or fan position.

**Note:** Thermostat does not control heater ON/OFF cycle. "OFF" Position turns unit off. See FIG. B1.

## B1b. Bimetal Relay Controls

This type of air conditioner has a wall mounted bimetal thermostat and a relay board that replaces the mechanical switch and thermostat on the mechanical units and replaces the main board and control board on the electronic units.

**Note:** Remember to check the installation and operating instructions for the specific model of air conditioner you are diagnosing.

**Cooling Operation**

Place the **Temperature Set Lever** to desired temperature level (located at top of thermostat). Select fan speed that best satisfies your needs: (upper right switch at bottom of thermostat). See FIG. B2.

a. **High Speed:** Selected when maximum cooling and dehumidification are required.
b. **Low Speed:** Selected when RV reaches desired comfort level and needs to be maintained. Normally this speed is used for nighttime operation.

Select **Auto/ON Switch** operation as follows:
(Lower right switch at bottom of thermostat)

a. **Auto Position:** Air conditioner fan runs whenever cooling is required and stops whenever cooling is not required.
b. **On Position:** Air conditioner fan runs continuously to circulate air in RV.

Set the **Heat/OFF/Cool Switch** to cool position
(Located at lower left side of thermostat)

The air conditioner will now come on when cooling is required and cycle off when the temperature level selected is reached.

**FIG. B2**
**1 = Temp Set Lever**
**2 = Auto/ON Switch**
**3 = System Switch**
**4 = Fan Speed**

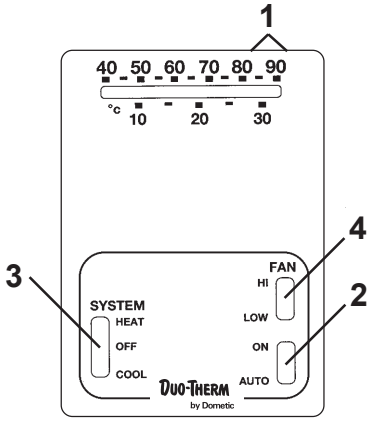


**⚠ CAUTION**

**Wait at least two (2) minutes before restarting the air conditioner after shutting off with either the Heat/OFF/Cooling Switch of the Temperature Set Lever. This allows the refrigerant pressure in the air conditioner to equalize and will allow the compressor to restart easily.**

**Heating Operation**
**(If furnace is connected to Thermostat)**

Set Temperature Set Lever to desired temperature level (located at top of thermostat). See FIG. B2.
Set the Heat/Off/Cool Switch to heat position (located at lower left side of thermostat). See FIG. B2.

The furnace will now come on when heat is required and cycle off when temperature level selected is reached.

**Special Feature**

When thermostat:

**Heat/Off/Cool Switch** is in the OFF or HEAT position and **Auto/On Switch** is in the ON position, the air conditioner fan will run continuously to circulate the air inside the RV. See FIG. B2.

## B1c. Analog Control System

In order to familiarize yourself with the operation of the Analog Control System, the following diagrams along with the accompanying text will explain all the functional characteristics of the system.

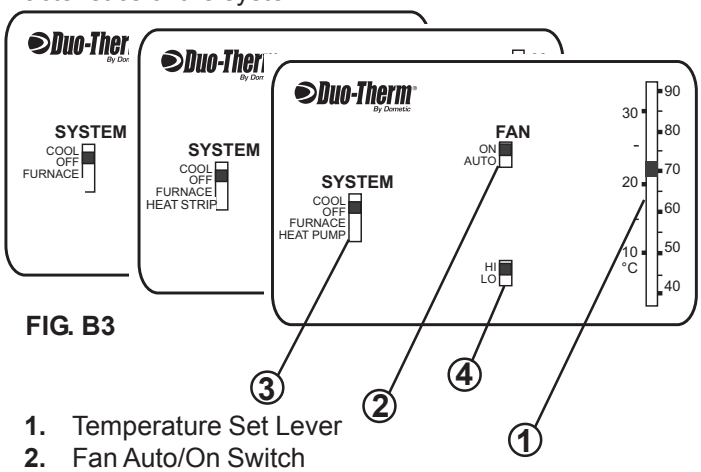


**FIG. B3**

1. Temperature Set Lever
2. Fan Auto/On Switch
3. System Switch
4. Fan High/Low Switch

**Analog Control Cooling Operation**

1. Place the **Temperature Set Lever (1)** to desired temperature level. See FIG. B3.
2. Select desired fan speed by moving the **Fan Speed Switch (4)** to :
   a. **High speed:** Selected when maximum cooling and dehumidification are required.
   b. **Low speed:** Selected when RV reaches desired comfort level and needs to be maintained. Normally this speed is used for night time operation.
3. Move the **FAN Auto/On Switch (2): See FIG. B3**
   a. **Auto Position:** Unit fan runs whenever cooling is required and stops whenever cooling is not required.
   b. **ON Position:** Unit fan runs continuously to circulate air in RV. See FIG. B3.
4. Set the **System Switch** to cool position. The unit compressor will now come ON and cycle OFF when the temperature level selected is reached.

**Furnace Operation**
**(If furnace is connected to relay box.)**

1. Set the **Temperature Set Lever (1)** to desired temperature setting. See FIG. B3
2. Set the **System Switch (3)** to furnace position. The furnace will now come ON when heat is required and cycle OFF when the temperature setting selected is reached.

# Section B - Operation, cont'd.

**Analog Control Electric Heat Strip Operation**
**(If unit is equipped with optional electric heat strip.)**

1. Set the **Temperature Set Lever (1)** to desired temperature level. See FIG. B3.
2. Set the **System Switch (3)** to heat strip position.
3. Move the **FAN Auto/On Switch (2):**
   a. **Auto Position:** Unit fan runs whenever heat is required and stops whenever heating is not required. See FIG. B3.
   b. **ON Position:** Unit fan runs continuously to circulate air in RV. See FIG. B3.
4. Select desired fan speed by moving the **Fan Speed Switch (4)** to:
   a. **High Speed:** Selected when maximum air flow is required. The discharge air will feel cool due to the maximum air flow. It is normally not used for heat strip operation. See FIG. B3.
   b. **Low Speed:** Normally selected for heat strip operation, because less air movement is needed for heat and discharge air is warmer. See FIG. B3.
5. Set System Switch (3) to the heat strip position. The unit's heat strip will now come "ON" and cycle "OFF" when the temperature level selected is reached.

**Continuous Blower Operation**

1. Set the **System Switch (3)** to any position (including "OFF"). See FIG. B3.
2. Move the **FAN Auto/On Switch (2)** to the ON position, the unit fan will operate continuously at the fan speed selected by the **Fan Speed Switch (4).** See FIG. B3.

## B1d. Comfort Control Center

The Comfort Control Center has been designed for you to easily operate all the air conditioning and gas heating appliances found in your vehicle from one location.

In order to familiarize yourself with the operation of the Comfort Control Center, the following diagram along with

**FIG. B4**

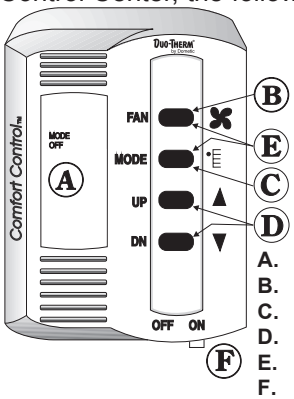


A. Liquid Crystal Display
B. Fan Speed Selector Button
C. Mode Selector Button
D. Temperature Selector Buttons
E. Zone and Stage Selector
F. On/Off Switch

the accompanying text will explain all the functional characteristics of the system.

**Liquid Crystal Display** - The Comfort Control Center is equipped with a liquid crystal display (LCD) that identifies the mode of operation, the temperature set-point, the zone identification and the fan speed. The Comfort Control Center is designed to accept and control many varied air conditioning and gas heating appliances. When you begin to first operate the Comfort Control Center, you will see that the LCD readout will only show the options available based on the appliances installed on your vehicle. An incandescent light will illuminate the LCD area when a selector button is pushed for easy reading at all times. See FIG. B4.

**Fan Speeds** - Possible available fan speeds are: **LOW, MEDIUM, HIGH** and **AUTO.** To select the desired fan speed, momentarily depress the **FAN** push button. You will need to continue to depress and release the **FAN** button until the desired fan speed is shown in the LCD readout area of the Comfort Control Center. See FIG. B4.

**Mode Selector Button** - Modes of operation available are: **OFF, FAN ONLY, COOL, HEAT PUMP, FURNACE, STAGE** and **HEAT STRIP.** Remember, the LCD readout will only show the options available based on the appliances installed on your vehicle. To select the mode of operation, momentarily depress the **MODE** push-button. You will need to continue to depress and release the button until the desired mode is shown in the LCD readout area on the Comfort Control Center. See FIG. B4

To determine the Comfort Control Center options available to you, depress and release the **MODE** push-button until it goes through all selections. See FIG. B4

**Temperature Selector Buttons** - The temperature set-point range is from 40° to 99° Fahrenheit. Determination of Fahrenheit or Celsius standard is done at the time of your manufacturer's installation of the Comfort Control Center. To set the temperature at your comfort level, simply depress and release the **UP** or **DN** push-button until the desired temperature is shown in the LCD readout area of the Comfort Control Center. See FIG. B4

**Zone and Stage Selector Buttons** - A **ZONE** is also established at the time of installation of the Comfort Control Center. If you have one air conditioner, you will have one **ZONE**. If the vehicle has more than one cooling system, depending on the manufacturing installation, you may have 2, 3 or 4 **ZONES**. Zones are defined and preset by the manufacturer. A zone is an area of cooling/heating which is controlled independently within that area, and regulated at the Comfort Control Center. A typical example of a two zone application would be a vehicle with two air conditioning systems, one in the front area (living room, kitchen) and one in the back section (bedroom and bath). The front area could be established as **ZONE 1** and the back section **ZONE 2**. You can select the desired temperature and fan speeds for each zone independently, thereby keeping your bedroom cooler than the front portion of the vehicle. To determine the number of established zones in the vehicle, simultaneously depress the **FAN** and **MODE** push-buttons. **ZONE 1** will be the first Zone to appear in the LCD readout. Continue to depress and release these buttons until you see **ZONE 1** reappear. See FIG. B4.

**ON/OFF Switch** - The ON/OFF switch is located on the lower right hand edge of the Comfort Control Center. Move the lever from side to side to change status. See FIG. B5.

**General Information**

The ability of the air conditioner to maintain the desired inside temperature depends on the heat gain of the RV. Some preventative measures taken by the occupants of the RV can reduce heat gain and improve the performance of the air conditioner. During extremely high outdoor temperatures, the heat gain of the vehicle may be reduced by:

1. Parking the RV in a shaded area.
2. Using window shades (blinds and/or curtains).
3. Keeping windows and doors shut or minimizing usage.
4. Avoiding the use of heat producing appliances.

Starting the air conditioner early in the morning and giving it a "head start" on the expected high outdoor ambient will greatly improve its ability to maintain the desired indoor temperature.

The manufacturer of this air conditioner will not be responsible for damage caused by condensed moisture on ceilings or other surfaces. Air contains moisture and this moisture tends to condense on cold surfaces. When air enters the RV, condensed moisture may appear on the ceiling, windows, metal parts, etc. The air conditioner removes this moisture from the air during normal operation. Keeping doors and windows closed when the air conditioner is in operation will minimize condensed moisture on cold surfaces.

This equipment must be serviced by qualified personnel and some states require these people to be licensed.

**Fan Only Mode of Operation -** See FIG. B4 & B5

1. Begin by placing the power switch on the lower right hand edge of the Control Center in the **ON** position. To do this, simply move the lever to the right.
2. Momentarily depress and release the **MODE** push-button until the **FAN ONLY** indicator on the Liquid Crystal Display (LCD) is illuminated.
3. Momentarily depress and release the **FAN** push-button until the desired fan speed indicator (**LOW, MED, HIGH, AUTO**) is illuminated. If your vehicle is equipped with a heat pump or a dual basement air conditioning system, your selection choice will be **LOW, HIGH** or **AUTO**.
4. After approximately 5 seconds, the selected fan speed will come on. The **MODE** and **FAN** speed you have selected will remain shown in the LCD area of the Control Center until you change your selection.
5. If the vehicle contains more than one **ZONE**, depress the **FAN** and **MODE** push-buttons simultaneously to select **ZONE 2**, and repeat procedures from step two above. Repeat entire procedure for each additional zone.

**FIG. B5**

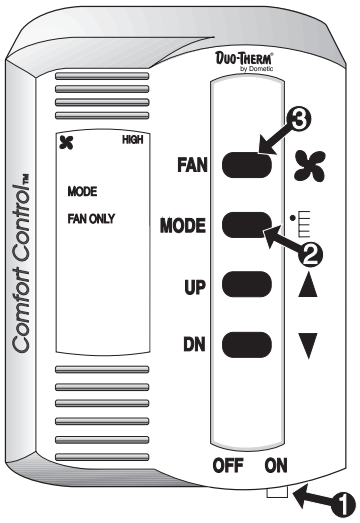


**Cooling Mode Operation -** See FIG. B4 & B5

(To set cooling temperatures and fan speeds on Duo-Therm Air Conditioners and the cooling mode of Duo-Therm Heat Pumps.)

1. Momentarily depress and release the **MODE** push-button until the **COOL** indicator on the LCD is illuminated.
2. Depress and release the **FAN** push-button to select your desired fan speed.
3. Depress and release the **UP** push-button to increase the temperature or the **DN** push-button to decrease the desired temperature. The final selected **SETPOINT** will be displayed in the LCD area of the Comfort Control Center.
4. After a delay of approximately 2 minutes the air conditioner's compressor will come on and the cooling process will begin. Once the room temperature reaches the selected **SETPOINT**, the compressor will cycle off. Once the Comfort Control Center senses the need for cooling, the compressor will restart in approximately two minutes. At this point, the fan will either:
   a. continue to operate in the single selected fan speed or,
   b. cycle **OFF** and **ON** with the compressor if the **AUTO** fan speed has been selected.

   If the vehicle has a **dual basement air conditioner or dual heat pump system**, the word **STAGE** (see stage operation, page 20) will be illuminated. Both of these units operate in two different stages, and the word **STAGE** will show when the second stage operation has been selected. To select the second stage, simultaneously depress the **FAN** and **MODE** push-buttons. See FIG. B4 & B5.

# Section B - Operation, cont'd.

**Fan Only Mode of Operation -** See FIG. B4 & B6

1. Begin by placing the power switch on the lower right hand edge of the Control Center in the **ON** position. To do this, simply move the lever to the right.
2. Momentarily depress and release the **MODE** push-button until the **FAN ONLY** indicator on the Liquid Crystal Display (LCD) is illuminated.
3. Momentarily depress and release the **FAN** push-button until the desired fan speed indicator (**LOW, MED, HIGH, AUTO**) is illuminated. If your vehicle is equipped with a heat pump or a dual basement air conditioning system, your selection choice will be **LOW, HIGH or AUTO**.
4. After approximately 5 seconds, the selected fan speed will come on. The MODE and FAN speed you have selected will remain shown in the LCD area of the Control Center until you change your selection.
5. If the vehicle contains more than one **ZONE**, depress the **FAN** and **MODE** push-buttons simultaneously to select **ZONE 2**, and repeat procedures from step two above. Repeat entire procedure for each additional zone.

**FIG. B6**

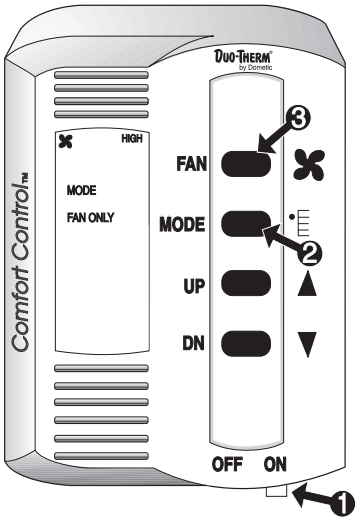


**Cooling Mode Operation**

(To set cooling temperatures and fan speeds on Duo-Therm Air Conditioners and the cooling mode of Duo-Therm Heat Pumps.) See FIG. B7.

1. Momentarily depress and release the **MODE** push-button until the **COOL** indicator on the LCD is illuminated.
2. Depress and release the **FAN** push-button to select your desired fan speed.
3. Depress and release the **UP** push-button to increase the temperature or the **DN** push-button to decrease the desired temperature. The final selected **SETPOINT** will be displayed in the LCD area of the Comfort Control Center.
4. After a delay of approximately 2 minutes the air conditioner's compressor will come on and the cooling process will begin. Once the room temperature reaches the selected **SETPOINT**, the compressor will cycle off. Once the Comfort Control Center senses the need for cooling, the compressor will restart in approximately two minutes. At this point, the fan will either:
   a. continue to operate in the singe selected fan speed or,
   b. cycle **OFF** and **ON** with the compressor if the **AUTO** fan speed has been selected.
5. If the vehicle contains more than one **ZONE**, depress the **FAN** and **MODE** push-buttons simultaneously to select **ZONE 2**, and repeat procedures from Step 1. Repeat entire procedure for each additional zone.

**Note:** If set point is too low, the inside could freeze up.

**FIG. B7**

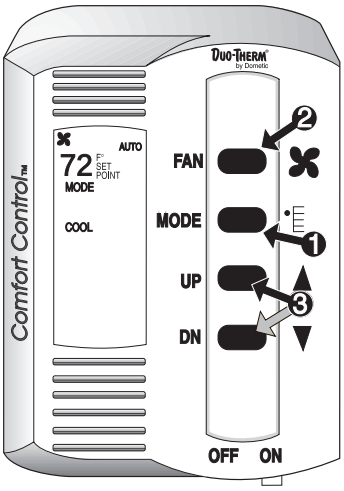

**Heat Pump Operation**

(To set heating temperatures for vehicles equipped with a Duo-Therm rooftop or basement heat pump, see "Cooling Mode Operation".) See FIG. B8.

1. Momentarily depress and release the **MODE** push-button until the **HEAT PUMP** indicator on the LCD is illuminated.
2. If you have not previously set your fan speed, you may do so by depressing and releasing the **FAN** push-button to select.
3. Depress and release the **UP** push-button to increase the temperature or the **DN** push-button to decrease the desired temperature. The final selected **SETPOINT** will be displayed in the LCD area of the Comfort Control Center.
4. After a delay of approximately 2 minutes the heat pump's compressor will come on and the heating process will begin. Once the room temperature reaches the selected **SETPOINT**, the compressor will cycle off. Once the Comfort Control Center senses the need for heating, the compressor will restart in approximately two minutes. At this point, the fan will either:
   a. continue to operate in the single selected fan speed or,
   b. cycle **OFF** and **ON** with the compressor if the **AUTO** fan speed has been selected.
5. If the vehicle contains more than one **ZONE**, depress the **FAN** and **MODE** push-buttons simultaneously to select **ZONE 2**, and repeat procedures from Step 1 above. Repeat entire procedure for each additional zone.

**FIG. B8**

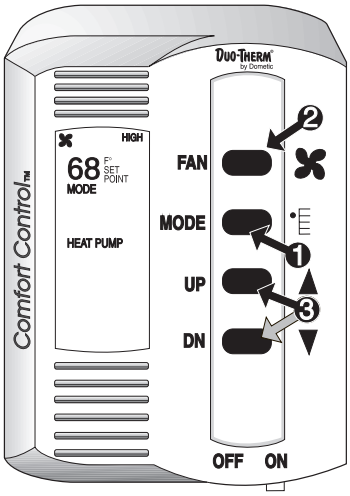


**Furnace Mode Operation**

(If the vehicle is equipped with a gas furnace connected to the Comfort Control Center.) See FIG. B9

1. Momentarily depress and release the **MODE** push-button until the **FURNACE** indicator on the LCD is illuminated.
2. The Heat Pump fan does not operate in the **FURNACE** mode.
3. Depress and release the **UP** push-button to increase the temperature or the **DN** push-button to decrease the desired temperature. The final selected **SETPOINT** will be displayed in the LCD area of the Comfort Control Center.
4. The Duo-Therm heat pump system will not operate when the Comfort Control System is in the **FURNACE** mode. For cooling, change **MODE** to **COOL**.
5. If the vehicle contains more than one **ZONE**, depress the **FAN** and **MODE** push-buttons simultaneously to select **ZONE 2**, and repeat procedures from Step 1 above. Repeat entire procedure for each additional zone.

**Note:** When furnace mode is selected in any Zone, all heat pump units will terminate operation.

**FIG. B9**

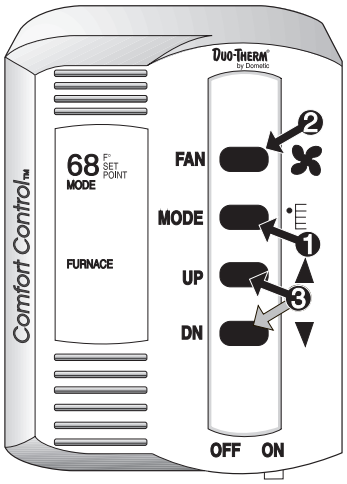

# Section B - Operation, cont'd.

**Heat Strip Mode Operation -** See FIB. B10
(For Duo-Therm air conditioners with an electric heat strip.)

1. Momentarily depress and release the **MODE** push-button until the **HEAT STRIP** indicator on the LCD is illuminated.
2. The fan will operate in **LOW, MED** or **AUTO**. You will not be able to select **HIGH** speed when in the **HEAT STRIP** mode. Depress and release the **FAN** push-button to select desired speed.
3. Depress and release the **UP** push-button to increase the temperature or the **DN** push-button to decrease the temperature. The final selected **SETPOINT** will be displayed in the LCD area of the Comfort Control Center.
4. The electric heat strip will cycle **ON** and **OFF** per the temperature **SETPOINT** displayed. The fan will either:
   a. continue to operate in the selected fan speed or,
   b. cycle **OFF** and **ON** with the heat strip if the **AUTO** fan speed has been selected.
5. If the vehicle contains more than one **ZONE**, depress the **FAN** and **MODE** push-buttons simultaneously to select **ZONE 2**, and repeat procedures from Step 1 above. Repeat entire procedure for each additional zone.

**FIG. B10**

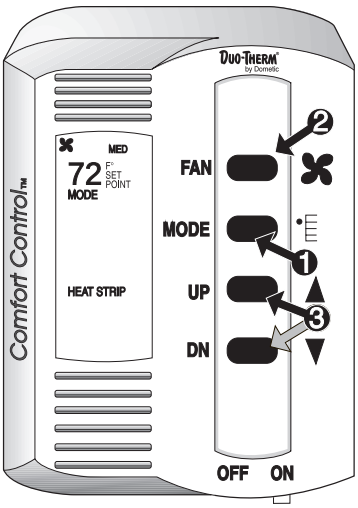


**Auto Fan**
When **AUTO FAN** is selected, the fan speed will be determined by the mode you are in.

**COOL MODE** - In the **COOL** mode, which is the air conditioning mode, the fan will automatically select the speed depending upon the difference between the temperature **SETPOINT** and the room temperature. When that difference is:

| | |
|---|---|
| 8° or more | The fan will operate on **HIGH** |
| 4° to 8° | The fan will operate on **MED** |
| 4° or below | The fan will operate on **LOW** |

**HEAT PUMP MODE** - When **HEAT PUMP** mode is selected, the fan will automatically run in the **LOW** speed.
**HEAT STRIP MODE** - When **HEAT STRIP** mode is selected, the fan will automatically run in the **LOW** speed.

**FAN ONLY MODE** - In the **FAN ONLY** mode, the fan automatically runs in the **LOW** speed.

**Refrigerant Compressor Time Delay**
A time delay of approximately two minutes occurs any time the compressor is required to begin the cooling or heat pump cycle.

**Power Interruption**
In the event that power to the air conditioner or control is interrupted, the system will restart with the same settings you have previously set.

**Zone Control**
The Duo-Therm Comfort Control Center will operate cooling and heating appliances which the vehicle manufacturer has designed to heat or cool different areas (**ZONES**) of your RV. The Comfort Control Center will advise you if the vehicle has multiple **ZONES**, by showing **ZONE 1, 2, 3 or 4** in the LCD readout.

**Stage Control Operation**
If the vehicle is equipped with a Duo-Therm Dual Basement Air Conditioner or a Dual Basement Heat Pump, you have an air conditioning system that is designed to optimize comfort and running efficiencies. This is accomplished by providing an on-demand secondary stage of operation.

**Note:** The primary stage will continue to operate even if there isn't electrical power available to run the second stage.

The Comfort Control Center simplifies this operation by allowing you to set the primary temperature set-point and the differential temperature set-point which activates the secondary stage. After turning on your Comfort Control Center, perform the following steps to set and activate the stage control operation. See FIG. B11.

1. Momentarily depress the **MODE** push-button until the desired mode of operation is selected. (**FAN ONLY, COOL, HEAT PUMP**)
2. Momentarily depress the **FAN** push-button until the desired fan speed indicator is illuminated (**LOW, HIGH, AUTO**)

**FIG. B11**

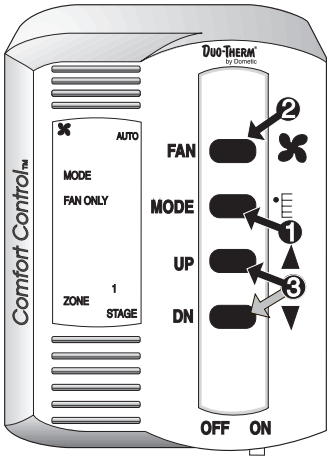


3. Momentarily depress the **UP** and **DN** push-button until the desired room temperature set-point is displayed.

This completes the setup for the primary stage of the Dual Basement Air Conditioner or Dual Basement Heat Pump. Next, you will set up the secondary stage.

**To Set Up the Secondary Stage**

1. Simultaneously depress and release the **FAN** and **MODE** push-buttons until the **STAGE** indicator on the LCD is illuminated. See FIG. B12.
2. Momentarily depress the **MODE** push-button until the desired mode of operation for the second stage is selected (**FAN ONLY, COOL, HEAT PUMP**). Normally, the mode of operation is the same as the primary stage.
3. Momentarily depress the **FAN** push-button until the desired fan speed indicator is illuminated (**LOW, HIGH, AUTO**).
4. Momentarily depress the **UP** or **DN** push-button to set the desired differential temperature setpoint (0°F to 10°F). The secondary stage will run once the actual room temperature reaches the differential temperature setpoint. **Example:** Desired room temperature setpoint for the primary stage in the **COOL MODE** is set at 72°F; differential temperature setpoint is set at 5°F. The secondary stage will activate when the actual room temperature reaches 77°F (72°F + 5°F), and will continue to operate until the room once again becomes 72°F.

**FIG. B12**

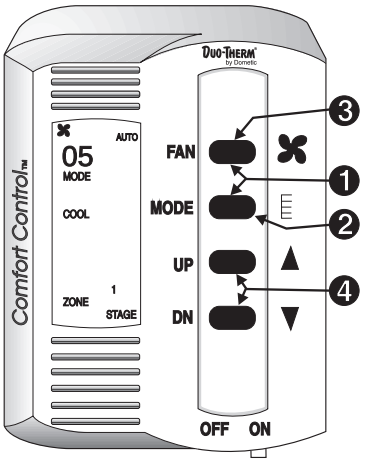


**Aux. Heat -** See FIG. B13

When in the **HEAT PUMP** mode, if the outside ambient temperature is measured to be below 24°F, the control will automatically select the **FURNACE** operation. When this happens, the **AUX. HEAT** and the **HEAT PUMP** indicators on the LCD will illuminate. Once the outside ambient temperature is measured above 34°F, the control will return to the **HEAT PUMP** operation. If your vehicle does not contain a furnace, and you have a Duo-Therm Heat Pump, once the outside ambient temperature goes below 24°F, the system will shut down until the outside temperature reaches 34°F, at which time the Heat Pump will resume operation.

**FIG. B13**

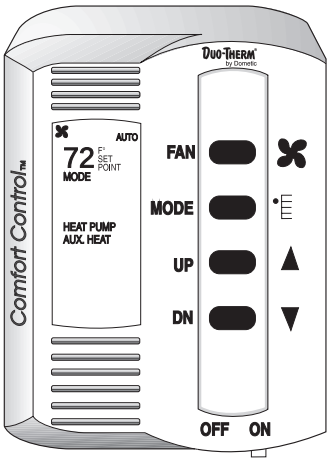


**Defrost Cycle -** See FIG. B14

This cycle is active during **HEAT PUMP** operation and allows the heat pump to operate down to 24°F. When the outside ambient temperature is less than 42°F and greater than 24°F, a defrost timing cycle will begin. The defrost timing cycle will allow operation of the heat pump for 40 minutes. The fan will the be shut off, the refrigerant flow reversed and run for 4-1/2 minutes, this is the **DEFROST** cycle. The refrigerant flow will then be returned to normal and after a 30 second delay, will continue until the temperature is greater than 42°F or until the temperature becomes less than 24°F, at which time the furnace will activate. (See Aux. Heat). During the defrost cycle, the **DEFROST** indicator on the LCD shall be illuminated.

**FIG. B14**

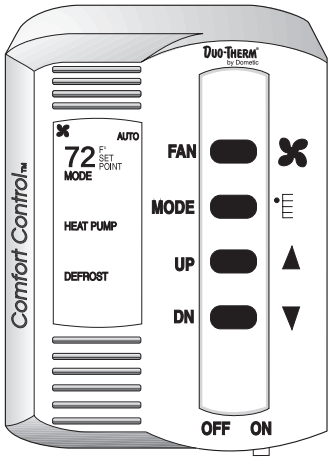

**Reset**
If the Comfort Control Center is not operational, inadequate data or no functions occur, reset the Comfort Control Center to factory settings. When a reset procedure is done, all previous program memory is removed. The factory setting of 72°F for cooling mode and 68°F for heating modes are entered.

**To initiate a RESET, do the following in the order listed:**
1. Turn control on to ensure annunciator data and light are present. If data and light are present, continue to next step.
2. Depress **MODE** switch to activate annunciator light.
3. Simultaneously depress the bottom two buttons (temperature **UP** and **DOWN**) and hold.
4. While holding these buttons down, depress the **MODE** button once and release.
5. Release the two buttons previously held down.
6. Depress the **MODE** button once again.
7. At this time the light should extinguish, and the mode should register "**OFF**". If not, repeat Steps 2 through 6.
8. Retest system ensuring that all functions are present and operational.

**FIG. B15**

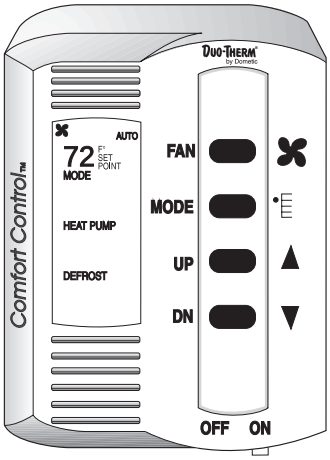


# B2. Heat Pump

**General Information**
The roof-top heat pump was designed to operate in a MILD GEOGRAPHICAL AREA for heating where the heat loss is minimal. The heat pump was designed to operate down to an outside ambient temperature of 40°F. As long as the temperature remains below 40 degrees, the main furnace will heat your home. As the outside temperature increases to 45°F., the outdoor thermostat switches back to the heat pump circuit.

**Note:** Model 59126.501 does not have an outdoor thermostat. When outdoor temperature is at or below 40°F., use the main furnace to heat your home.

The advantages of the heat pump are:
1. User friendly; only one unit for both heating and cooling;
2. Heat pump heating uses campsite electrical hookup and saves on trips to refill L.P. tanks;
3. When used in mild climates where the outdoor temperature range is 40 degrees or higher, an LP furnace is not needed.

The heat pump operates in two different modes; cooling and heating.

The same mechanism is used for both cycles, but the travel or flow of refrigerant is reversed to change from cooling to heating. The items used to accomplish this are a compressor, an inside coil, an outside coil, capillary tube or tubes (the metering device/s), a series of copper lines (refrigerant grade tubing), a reversing valve, an air movement system (motor and wheel or blades), and refrigerant (R22).

**The Cooling Mode**
To cool the air inside a structure, heat is removed from the inside air and released to the outside air or ambient.

To accomplish this, first air flow is established to pass over both coils (inside and outside). Next, a refrigerant cycle is established to cause refrigerant (R22) to flow through both coils.

The refrigerant cycle starts at the compressor. Its function is to take the low pressure R22 vapor and discharge it as high pressure vapor. As the refrigerant (R22) is compressed, it gives off heat causing the discharge line to be quite warm or hot to the touch in hot weather.

The R22 high pressure vapor leaves the compressor through the discharge line and enters the reversing valve. The reversing valve routes the high pressure vapor to the outside coil. In the cooling mode, the outside coil is a condenser coil.

The high pressure R22 vapor enters the outside coil (condenser). Here it is cooled and condensed into liquid R22 by passing through the coil. The heat removed from the refrigerant is expelled to the outside air. The refrigerant

leaves the outside coil as high pressure liquid.

As the high pressure liquid R22 leaves the outside coil (condenser) it passes through the small capillary tube or tubes. This is the metering or flow control device in the sealed system. It determines the amount and force of which the R22 enters the inside coil. It is **imperative** that the capillary tube's length and diameter not be altered. If the tube is altered, the unit will not operate as efficiently as it should.

The high pressure liquid R22 enters the inside coil in a controlled amount from the capillary tube. When the liquid enters the low pressure atmosphere of the inside coil (evaporator) it evaporates into vapor. When the evaporative process takes place, heat is removed from the air flowing through the inside coil (evaporator). The air with the heat removed is returned to the inside of the structure via the air movement system (blower assembly).

From the inside coil (evaporator), the low pressure refrigerant (R22) vapor returns to the reversing valve. The reversing valve routes the low pressure vapor to the compressor through the suction line to start the cooling process again.

**The Heating Mode**

To heat the air inside a structure, heat is removed from the outside air or ambient and released to the inside air.

To accomplish this, first air flow is established to pass over both coils (inside and outside), Next, a refrigerant cycle is established to cause the refrigerant (R22) to flow through the coils.

The refrigerant cycle starts at the compressor. Its function is to take the low pressure R22 vapor and discharge it as high pressure vapor. As the refrigerant (R22) is compressed, it gives off heat causing the discharge line to be quite warm to the touch.

The R22 high pressure vapor leaves the compressor through the discharge line and enters the reversing valve. The reversing valve routes the high pressure vapor to the inside could. In the heating mode the inside coil is a condenser coil.

The high pressure R22 vapor enters the inside coil (condenser). Here it is cooled and condensed into liquid R22 by passing through the coil. The heat removed from the refrigerant is expelled to the inside air. The refrigerant leaves the inside coil as high pressure liquid.

As the high pressure liquid R22 leaves the inside coil (condenser) it passes through the small capillary tube or tubes. This is the metering or flow control device in the sealed system. It determines the amount and force of which the R22 enters the outside coil.

It is imperative that the capillary tube's length and diameter not be altered. If the tube is altered, the unit will not operate as efficiently as it should.

**FIG. B16**

**COOLING MODE**

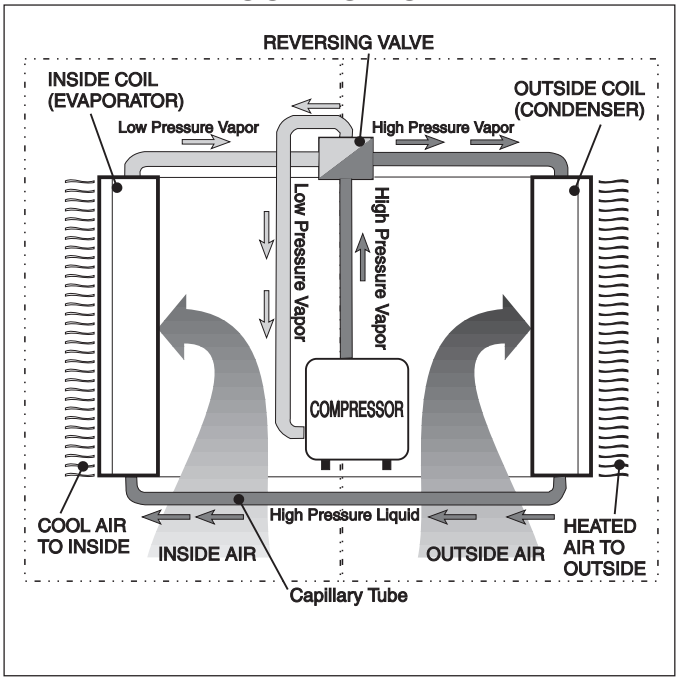


**FIG. B17**

**HEATING MODE**

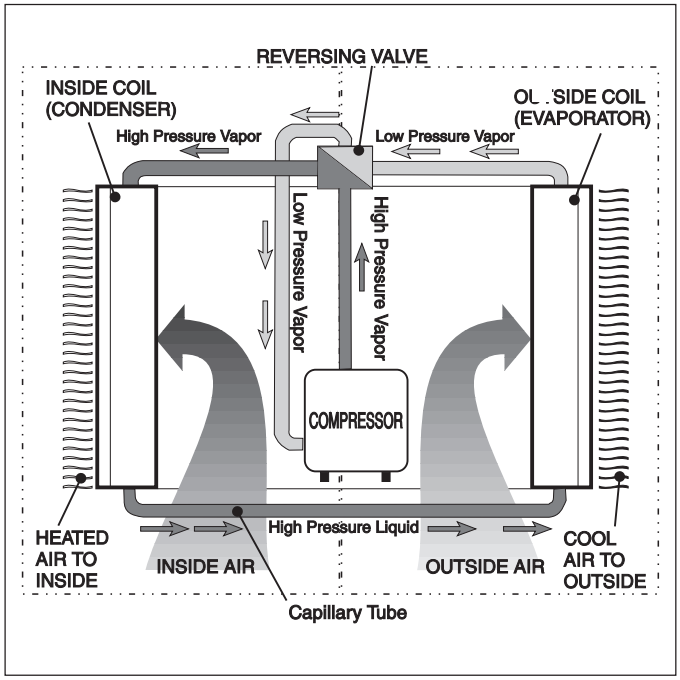

# Section B - Operation, cont'd.

The high pressure liquid R22 enters the outside coil in a controlled amount from the capillary tube. When the liquid enters the low pressure atmosphere of the outside coil (evaporator) it evaporates into vapor. When the evaporative process takes place, heat is removed from the air flowing through the outside coil (evaporator). The air with the heat removed is returned to the outside air (ambient) via the air movement system (blower assembly).

From the outside coil (evaporator), the low pressure refrigerant (R22) vapor returns to the reversing valve. The reversing valve routes the low pressure vapor to the compressor through the suction line to start the heating process again.

Operating instructions can change from one model to another.

Be sure you are familiar with the proper operating instructions for the specific model of heat pump you are diagnosing. An installation and operating manual is packaged with each heat pump system.

## B2a. Mechanical Controls

This type of heat pump has an air distribution box that has a mechanical selector switch and thermostat installed in it.

**Note:** Remember to check the installation and operating instructions for the specific model you are diagnosing.

**Controls**

The Selector Switch has eight positions including "OFF". This controls fan speed, heating mode and cooling modes.

The Thermostat controls the temperature range from 65°F. on the coldest side to 90°F. on the warmest side. In the cooling/heating mode, the compressor ON/OFF is controlled by the thermostat setting.

**Cooling Operation**

Set the thermostat at the desired temperature level. Select the fan speed that best satisfies your needs:

a. HIGH COOL: Selected when maximum cooling and dehumidification is required.
b. LOW COOL: Selected when room is at desired comfort level and needs to be maintained. Normally this speed is used for nighttime operation.

**Note:** The blower runs continuously to circulate air and maintain an even temperature. The compressor will come on when cooling is required to maintain the selected temperature level.

**⚠ WARNING**

**After shutting the heat pump down with either selector switch or thermostat, wait at least two (2) minutes before restarting. This allows the refrigerant pressure to equalize and compressor to restart easily.**

**Fan Operation:**

This will circulate the air in your RV without cooling or heating. There are two positions: HIGH FAN or LOW FAN to select from, depending upon personal choice.

**Heating Operation**

**Note:** This heat pump will not replace a furnace for heating your RV in cold weather. The intent is to remove the chill on cool days or mornings. When the outdoor temperature is below 40°F., the outdoor thermostat will shut down heat pump operation.

1. Turn the selector switch to "HEAT PUMP";
2. The Fan and Compressor will come on and begin heating.
3. When desired temperature level in RV is reached, the blower will run continuously to circulate air and maintain an even temperature. The compressor will cycle as required to maintain selected temperature.

**Off Position**

This position turns the unit off.

## B2b. Bimetal Relay Controls

This type of air conditioner has a wall mounted bimetal thermostat and a relay board that replaces the mechanical switch and thermostat on the mechanical units and replaces the main board and control board on the electronic units. See FIG. B18.

**Note:** Remember to check the installation and operating instructions for the specific model of air conditioner you are diagnosing.

**Bimetal Cooling Operation**

Place the Temperature Set Lever (1) to desired temperature level (located at top of thermostat). Select fan speed that best satisfies your needs: (upper right switch at bottom of thermostat) (4).

a. High Speed: Selected when maximum cooling and dehumidification are required.
b. Low Speed: Selected when RV reaches desired comfort level and needs to be maintained. Normally this speed is used for nighttime operation.

Select Auto/ON Switch (2) operation as follows: (Lower right switch at bottom of thermostat)

a. Auto Position: Air conditioner fan runs whenever cooling is required and stops whenever cooling is not required.
b. On Position: Air conditioner fan runs continuously to circulate air in RV.

Set the system switch to cool position. (Located at lower left side of thermostat)

The air conditioner will now come on when cooling is required and cycle off when the temperature level selected is reached.

FIG. B18

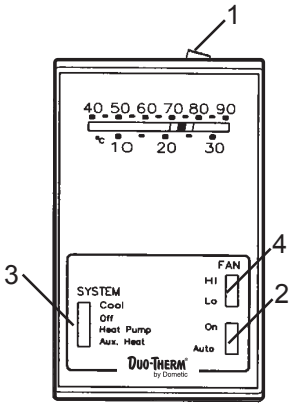


**⚠ CAUTION**

**Wait at least two (2) minutes before restarting the air conditioner after shutting off with either the Heat/Off/Cooling Switch or the Temperature Set Lever. This allows the refrigerant pressure in the air conditioner to equalize and will allow the compressor to restart easily.**

**Heating Operation**
**(If furnace is connected to thermostat)**
Set Temperature Set Lever (1) to desired temperature level (located at top of thermostat). Set the System Switch to heat position (located at lower left side of thermostat(.

The furnace will now come on then heat is required and cycle off when temperature level selected is reached.

**Special Feature**
When thermostat System Switch is in the OFF or HEAT position and **Auto/On Switch** is in the ON position, the air conditioner fan will run continuously to circulate the air inside the RV.

**Heat Pump Operation -** See FIG. B18
1. Set the Temperature Set Lever (1) to desired temperature setting.
2. Set the System Switch (3) to heat pump position.
3. Move the FAN Auto/On Switch (2):
   a. Auto Position: Unit fan runs whenever heat is required and stops whenever heating is not required.
   b. ON Position: Unit fan runs continuously to circulate air in RV.
4. Select the desired fan speed by moving the fan speed switch (4) to :
   a. High speed: Selected for maximum air flow. The discharge air will feel cool.
   b. Low speed: Selected normally for heat pump operation. The lower air flow allows it to feel warmer.

## B2c. Analog Control System

In order to familiarize yourself with the operation of the Analog Control System, the following diagrams along with the accompanying text will explain all the functional characteristics of the system.

FIG. B19

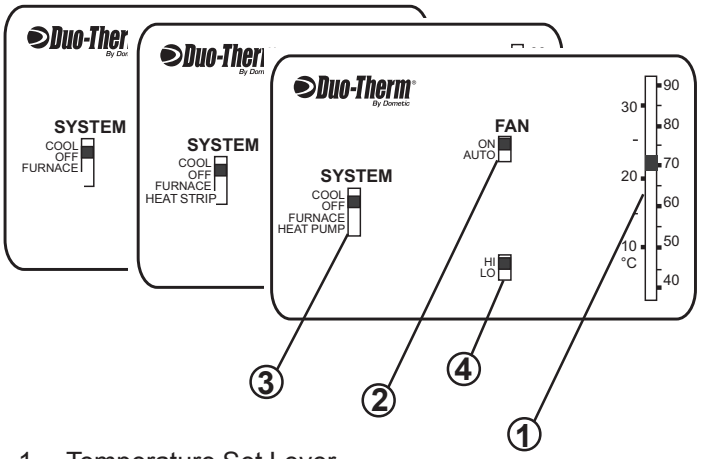


1. Temperature Set Lever
2. Fan Auto/On Switch
3. System Switch
4. Fan High/Low Switch

**Analog Control Cooling Operation -** See FIG. B19

1. Place the Temperature Set Lever (1) to desired temperature level.
2. Select desired fan speed by moving the Fan Speed Switch (4) to:
   a. High Speed: Selected when maximum cooling and dehumidification are required.
   b. Low Speed: Selected when RV reaches desired comfort level and needs to be maintained. Normally this speed is used for night time operation.
3. Move the FAN Auto/On Switch (2):
   a. Auto Position: Unit fan runs whenever cooling is required and stops whenever cooling is not required.
   b. ON Position: Unit fan runs continuously to circulate air in RV.
4. Set the System Switch to cool position.
   The unit compressor will now come ON and cycle OFF when the temperature level selected is reached.

**Furnace Operation**
**(If furnace is connected to relay box.) -** See FIG. B19
1. Set the Temperature Set Lever (1) to desired temperature setting.
2. Set the System Switch (3) to furnace position. The furnace will now come ON when heat is required and cycle OFF when the temperature setting selected is reached.

# Section B - Operation, cont'd.

**Analog Control Electric Heat Pump Operation -** See FIG. B19

1. Set the Temperature Set Lever (1) to desired temperature level.
2. Set the System Switch (3) to heat pump position.
3. Move the FAN Auto/On Switch (2):
   a. Auto Position: Unit fan runs whenever heat is required and stops whenever heating is not required.
   b. ON Position: Unit fan runs continuously to circulate air in RV.
4. Select desired fan speed by moving the Fan Speed Switch (4) to:
   a. High Speed: Selected when maximum air flow is required. The discharge air will feel cool due to the maximum air flow. It is normally not used for heat pump operation.
   b. Low Speed: Normally selected for heat pump operation, because less air movement is needed for heat and discharge air is warmer.

**Continuous Blower Operation**

1. Set the System Switch (3) to any position (including "OFF").
2. Move the FAN Auto/On Switch (2) to the ON position, the unit fan will operate continuously at the fan speed selected by the Fan Speed Switch (4).
3. Select desired fan speed by moving the Fan Speed Switch (4) to:
   a. High Speed: Selected when maximum air flow is required. The discharge air will feel cool due to the maximum air flow. It is normally not used for heat pump operation.
   b. Low Speed: Normally selected for heat pump operation, because less air movement is needed for heat and discharge air is warmer.

## B2d. Comfort Control Center

The Comfort Control Center has been designed for you to easily operate all the air conditioning and gas heating appliances found in your vehicle from one location.

In order to familiarize yourself with the operation of the Comfort Control Center, see Section B1d on page 16.

**⚠ WARNING**

**Make sure that the power supply to the unit is disconnected before performing any work on the unit to avoid the possibility of shock injury or damage to the equipment.**

## C1. Motors

**Roof Top Units -** To check the motor, turn the unit circuit breaker to OFF. With an AC volt meter, verify that the circuit has no AC volts. On most units, the wires from the motor connect directly into a 6 or 9 pin connector. The motor leads are white (common), black (high), red (low) and yellow (medium). Some units are 2-speed. If you are checking a 2 speed system, disregard the yellow wire. Set your VOM to the ohms scale. You will perform a continuity test. Check for continuity between the white wire and each of the other wires.

Lack of continuity between the white wire and any of the other wires indicates an open circuit and requires that the motor be changed. Next, check for continuity between each wire and the green/yellow wire. If you get continuity, you have a grounded motor and it must be replaced.

On Models 620315 and 630215, the motor leads do not go

**FIG. C1**

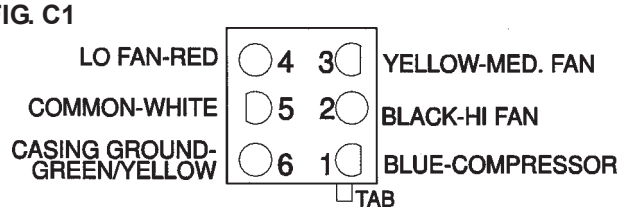


into a connector. On these units, disconnect the wires from the AC power module and do the previous tests between the motor leads.

**Single Compressor Units**

The units that have a single compressor are Models:

39015.XXX
39025.XXX
39035.XXX
39045.XXX
39115.XXX
39325.XXX
39335.XXX

**FIG. C2**

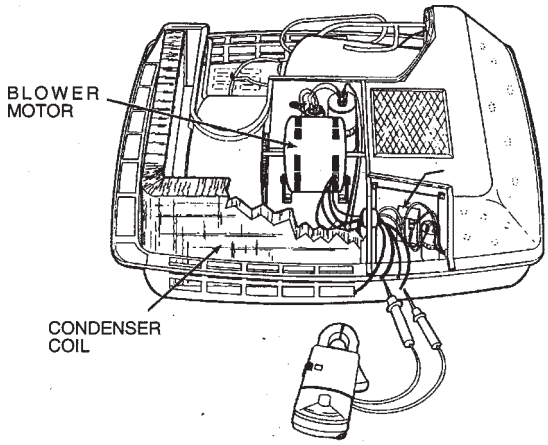


To check the motor, turn the unit circuit breaker OFF. With an AC voltmeter, verify that the circuit has no AC voltage. Next, locate the electric box and remove its cover. The motor leads will connect to a relay or a power module board and the run capacitor. Disconnect the motor leads.

Set your ohm meter to its highest scale for these tests. Check for continuity between the white wire and each of the other wire. Lack of continuity between the white wire and any of the other wires indicates an open circuit and requires that the motor be changed. Next, scrape some paint off the motor casing and check for continuity between each wire and unit casing or the motor casing. If you get continuity between each wire and unit casing or the motor casing. If you get continuity between any of the wires and the motor casing, you have a grounded motor and it must be replaced.

There are two types of motors used on these models. One is a single-speed motor and the other is a two-speed motor (high and low). The single speed motor has three wires: White (common), Black (high) and Brown (capacitor). The two-speed has four wires: White (common), Black (high), Red (low) and Brown (capacitor).

**Dual Compressor Units**

The units that have dual compressors are Models:

**39224.601** and **39424.601**

To check the motor, turn the unit circuit breaker or breakers OFF. With an AC volt meter, verify that the circuit has no AC voltage. The wires from the motor connect to a 9-pin connector. The motor leads are white (common - Terminal 4), black (high - Terminal 6) and red (low - Terminal 7). Set your ohm meter to its highest scale for these tests. Check for continuity between the white wire and each of the other wires.

**FIG. C3**

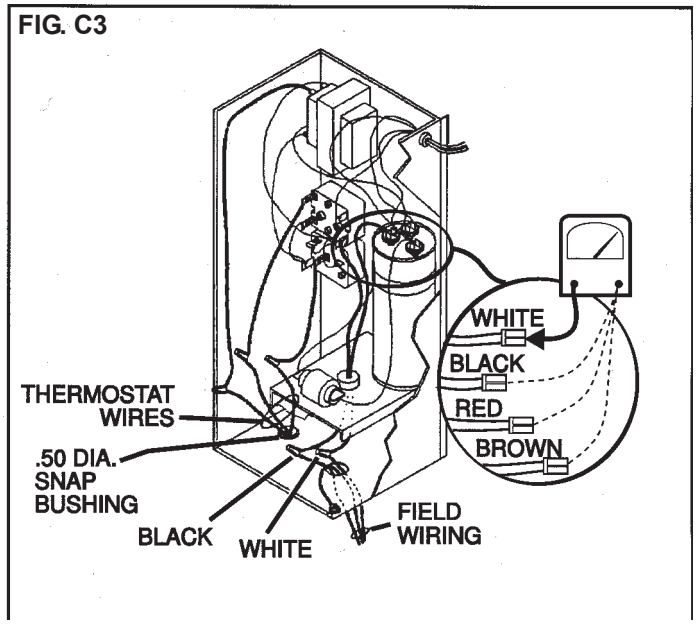

Lack of continuity between the white wire and any of the other wires indicates an open circuit and requires that the motor be changed. Next, check for continuity between each wire and the green/yellow wire. If you get continuity, you have a grounded motor and it must be replaced. See FIG. C4.

FIG. C4

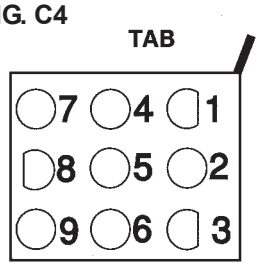


| CIRCUIT 1 | CIRCUIT 2 |
|---|---|
| 1– Black | 1– Orange |
| 2– White | 2– Gray |
| 3– Red | 3– Brown |
| 4– White | 4– White |
| 5– Brown | 5– Brown |
| 6– Black | 6– Black |
| 7– Red | 7– Red |
| 8– Violet | 8– Open |
| 9– Violet | 9– Open |

TERM 1- Compressor (C)
TERM 2- Compressor (R)
TERM 3- Compressor (S)
TERM 4- Common (motor)
TERM 5- Capacitor (motor)
TERM 6- Hi Fan (motor)
TERM 7- Lo Fan (motor)
TERM 8- Reversing Valve
TERM 9- Reversing Valve

Another test is the motor amperage on high speed. The amp meter is clamped around the black (high speed) lead. The high speed running amps of the motor should be ±1/10 of rating plate motor amps. If amp reading is above normal (listed on rating plate), the fan capacitor may be defective. Verify that the fan run capacitor is of the correct rating for the motor. See Section C2.

## C2. Capacitor, Fan/Run

The run capacitor may be one of two different kings: Either a single capacitor for the fan or compressor, or a combination capacitor for both the fan and the compressor.

The run capacitor should be checked with a capacitor tester. Follow the tester manufacturer's testing procedures. If one is not available, an ohm meter may be used. Turn the air conditioner circuit breaker OFF. See FIG. C5.

FIG. C5

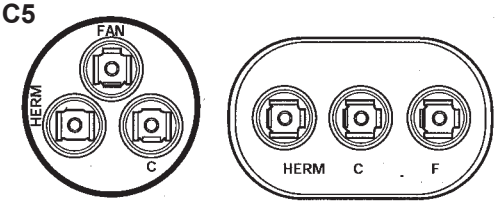


**⚠ WARNING**

**There may be a charge on the capacitor until discharged.**

The run capacitor must be manually discharged. Using an AC voltmeter set at the 500 volt scale or higher, connect meter leads to the terminals of the capacitor. After discharging the capacitor, disconnect the wires to the capacitor. Set the VOM meter to the highest ohm scale and connect the probes to the capacitor terminals. The reading should rapidly move toward continuity and slowly return to infinity. You should reverse the leads and repeat the procedure. If there is no reading, or a prolonged reading, replace the run capacitor. The combination run capacitor has three terminals. The terminals are marked "F", "C" and "HERM". To check the combination run capacitor, follow the discharge procedures above. Again, make sure you test from "C" (common) to "F" (fan) and "C" (common) to "HERM" (compressor).

## C3. Start Capacitor

The unit will have one of two types of start capacitor. One type has a 15,000 ohm resistor between the terminals. The other type does not have the resistor.

**⚠ WARNING**

**There may be a charge on the capacitor until discharged.**

Using an AC voltmeter set at the 500 volt scale or higher, connect the meter leads to the terminals of the capacitor.

**Start Capacitor with Resistor**

The start capacitor should be checked with a capacitor tester. Follow the tester manufacturer's testing procedures. If one is not available, an ohm meter may be used. Turn the unit's circuit breaker OFF. Disconnect the wires to the capacitor. The start capacitor does not need to be manually discharged since it has a built-in resistor. Use only an analog or dial-type ohm meter. Set the ohm meter to the highest ohm scale and connect the probes to the capacitor terminals. The reading should show continuity and slowly return to 15,000 ohms. You should then reverse the leads and check again. If there is not reading or a reading greater than 15,000 ohms, the start capacitor should be replaced. See FIG. C6.

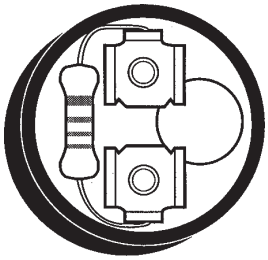

FIG. C6

**Start Capacitor without Resistor**

The start capacitor (without resistor) must be manually discharged in the same way the run capacitor was done a moment ago. See Section C2. Check this style capacitor the same way you would check the capacitor with the resistor. The reading will be different. The reading should show continuity and slowly return to infinity. Reverse the leads and check again. If there is no reading or a reading of "0" ohms, the start capacitor should be replaced. See FIG. C7.

FIG. C7

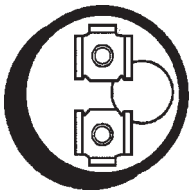

The start capacitor must be manually discharged. Using an AC voltmeter set at the 500 volt scale or higher, connect meter leads to the terminals of the capacitor. Next, disconnect the wires to the capacitor. Set the dial-type VOM to the highest ohm scale and connect the probes to the capacitor terminals. The reading should rapidly move toward continuity and slowly return to infinity. Next, reverse the leads and repeat the procedure. If there is no reading or a prolonged reading, replace the start capacitor.

## C5. PTCR Device or Start Relay

The positive temperature coefficient resistor, or PTCR has replaced the compressor start relay and the start capacitor on some models. It should be checked in two different ways: First check continuity. Turn the air conditioner circuit breaker to OFF. Disconnect the PTCR from the circuit. Check for continuity. If there is no continuity, replace PTCR.

**⚠ WARNING**

**This is an energized circuit. Shock can occur if not tested properly. Testing to be done by a qualified service technician.**

The second check to take is an amperage reading. Clamp an ammeter around the wire from the PTCR to the capacitor. Turn the air conditioner circuit breaker to ON and start the air conditioner. When the compressor starts, there will be an amperage reading for approximately one second or less. If there is no reading, or if there is a prolonged reading, the PTCR or start relay is faulty and must be replaced.

FIG. C8

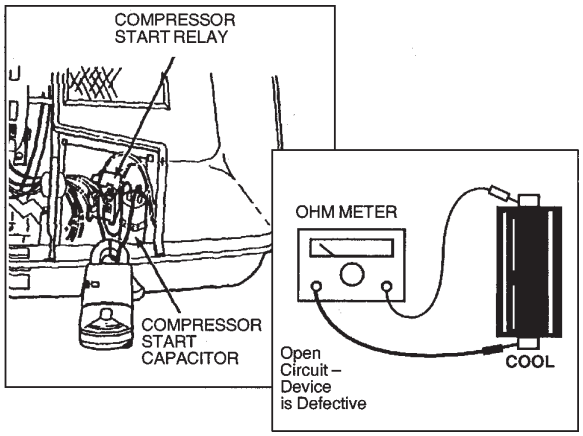


## C5. Compressor

To check compressor, turn the air conditioner circuit breaker to OFF. Disconnect the wires from the COMMON, START and RUN terminals. With the ohm meter set on the lowest ohm scale, check for continuity between all three terminals. Lack of continuity between any of the terminals indicates faulty windings in the compressor, and the compressor should be replaced. Next, scrape some paint off the casing of the compressor and check for continuity between each terminal and the casing. If a reading is obtained, the windings are shorted to the casing and compressor must be replaced.

FIG. C9

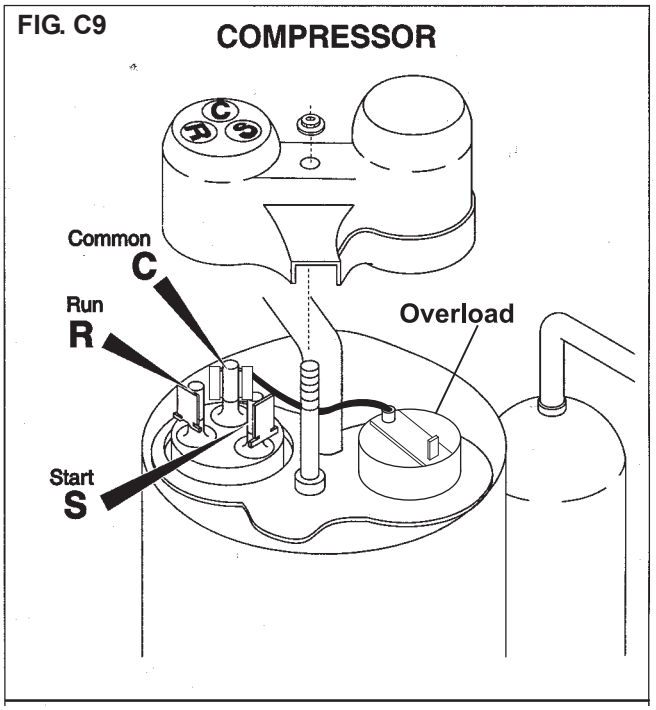

## C6. Overload Protector

An overload protector is a component that will open the AC circuit to the compressor if the compressor overheats due to an electrical problem. Some compressors have the overload protector built inside the compressor. This type, if defective, requires a complete compressor replacement.

Most compressors have the overload protector mounted on the exterior of the compressor casing. To check this type of protector, turn the air conditioner circuit breaker OFF. Make sure that the overload is at ambient temperature and measure continuity across its terminals. If open, it should be replaced. A weak overload protector in the electrical system will cause the compressor to start and stop rapidly or short-cycle. This situation would be difficult to test. An exact replacement overload protector should be used whenever a replacement is required. See FIG. C9.

**FIG. C10**

**579 & 595 FREEZE CONTROL**

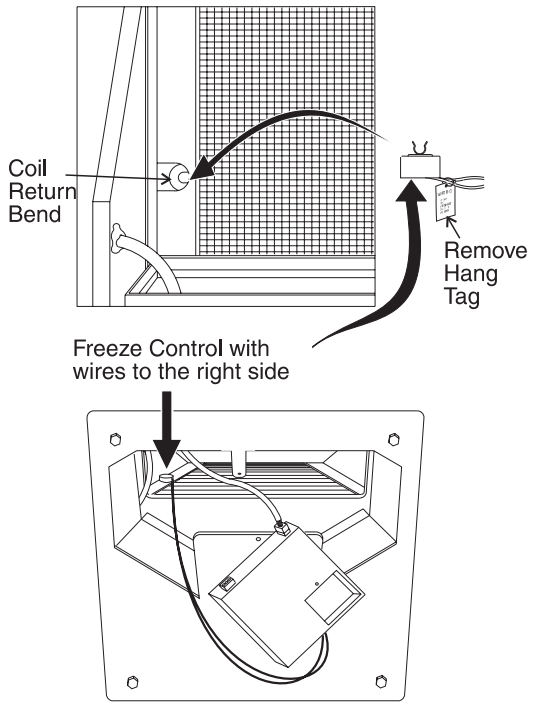


## C7. Cold (Freeze) Control

**(Low Temperature Protection Device)**

The cold (freeze) control is used on roof top air conditioners ONLY. If used with roof top heat pumps it can cause premature shutoff of the compressor.

The cold control is normally open (no continuity), and closed when the temperature is below 41 to 49 degrees. The switch will return to the open position at 52 to 62 degrees.

Check continuity through the switch, in temperatures over 62 degrees it should show open (no continuity) and in temperatures below 41 degrees it will be closed. Any variation requires the switch to be replaced. See FIG. C10 & C11.

**FIG. C11**

**600 & 630 FREEZE CONTROL**

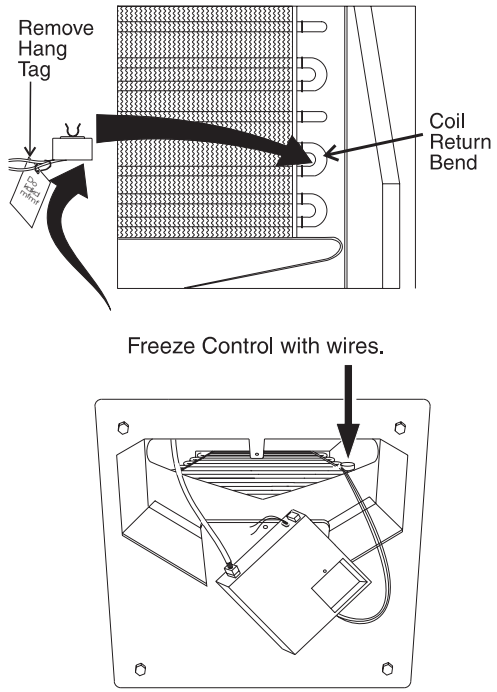


## C8. Electric Heater Strip

The heater is an optional component. To diagnose the heat strip, turn the air conditioner circuit breaker OFF. Unplug the heater and take an ohm reading across the two wiring terminals. You should have an ohm reading of 9.5 ohms ±10%. if the ohm reading is outside of these parameters, replace the heater.

To check the heater limit switch, check for continuity across the limit switch terminals with the limit switch at ambient temperature. If you have an open limit switch, replace it. Also make sure the heater plug is properly connected.

# C9. Selector Switch

## C9a. Selector Switch - Roof Top Air Conditioner

The selector switch in a mechanical air conditioner has several positions. The various switch positions can be tested for continuity with a volt/ohm meter set on the highest ohm scale. See FIG. C12.

First turn the 20 amp air conditioner breaker to OFF and remove wires from the switch.

With the switch in the OFF position, you should not have continuity between terminal L1 and any other terminals.

In the HIGH FAN position, you should have continuity between L1 and terminal 1.

In the MEDIUM FAN position, you should have continuity between L1 and terminal 2.

In the LOW FAN position, you should have continuity between L1 and terminal 4.

In the HIGH COOLING mode, you should have continuity between L1 and C, and L1 and 1.

In the MEDIUM COOLING mode, you should have continuity between L1 and C, and L1 and 2.

In the LOW COOLING mode, you should have continuity between L1 and C, and L1 and 4.

In the HEATING mode, you should have continuity between L1 and H, and L1 and 4.

Be sure to check the switch in all positions and be sure you have continuity only on the terminals for the selected mode. Lack of continuity or continuity on incorrect terminals designates a defective switch, and it must be replaced.

**FIG. C12**

| Position | Terminals |
|---|---|
| OFF | |
| HI FAN | L1 and 1 |
| MED FAN | L1 and 2 |
| LOW FAN | L1 and 4 |
| HI COOL | L1 and C; L1 and 1 |
| MED COOL | L1 and C; L1 and 2 |
| LOW COOL | L1 and C; L1 and 4 |
| HEAT | L1 and H; L1 and 4 |

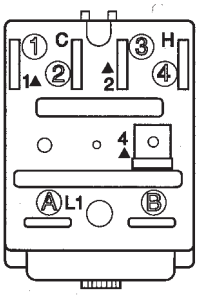


## C9b. Selector Switch - Roof Top Heat Pump

The selector switch in a mechanical heat pump has several positions. The various switch positions can be tested for continuity with a volt/ohm meter set on the highest scale. See FIG. C13.

Model 59126.501 First turn the 20 amp heat pump breaker to OFF. Next, remove the wires from the switch. With the switch in the OFF position, you should not have continuity between Terminal L1 and any other white numbered terminal.

In the HIGH 2 FAN position, you should have continuity between Terminal L1 and Terminal 4 only.

In the HIGH 1 FAN position, you should have continuity between Terminal L1 and Terminal 2 only.

In the LOW FAN position, you should have continuity between Terminal L1 and Terminal 1 only.

In the LOW COOLING position, you should have continuity between Terminal L1 and Terminal C; and Terminal L1 and Terminal 1 only.

In the HIGH 1 COOLING position, you should have continuity between Terminal L1 and Terminal C; and Terminal L1 and Terminal 2 only.

In the HIGH 2 COOLING position, you should have continuity between Terminal L1 and Terminal C; and Terminal L1 and Terminal 4 only.

In the HEAT PUMP position, you should have continuity between Terminal L1 and Terminal H; and Terminal L1 and Terminal 4 only.

**Note:** The terminals are identified with white ink.

Be sure to check the switch in all positions and be sure you have continuity only on the terminals for the selected position. Lack of continuity or continuity on incorrect terminals designates a defective switch, and it must be replaced.

**Note:** The numbers without circles are the white ink-stamped numbers.

**FIG. C13**

| Position | Terminals |
|---|---|
| OFF | |
| HIGH 2 FAN | L1 and 4 |
| HIGH 1 FAN | L1 and 2 |
| LOW FAN | L1 and 1 |
| LOW COOLING | L1 and C; L1 and 1 |
| HIGH 1 COOLING | L1 and C; L1 and 2 |
| HIGH 2 COOLING | L1 and C; L1 and 4 |
| HEAT PUMP | L1 and H; L1 and 4 |

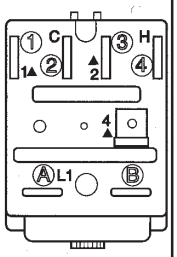

Model 59126.502, 630025 First, turn the 20 amp air conditioner breaker to OFF. Next, remove the wires from the switch. With the switch in the OFF position, you should not have continuity between Terminal L1 and any other white numbered terminal. See FIG. C4.

In the first HIGH FAN position you should have continuity between Terminal L1 and Terminal 1 only.

In the second HIGH FAN position, you should have continuity between Terminal L1 and Terminal 2 only.

In the LOW FAN position you should have continuity between Terminal L1 and Terminal 4 only.

In the first HIGH COOLING position you should have continuity between Terminal L1 and Terminal H; and Terminal L1 and Terminal 1 only.

In the second HIGH COOLING position, you should have continuity between Terminal L1 and H; and Terminal L1 and Terminal 2 only.

In the LOW COOLING position, you should have continuity between Terminal L1 and Terminal H; and Terminal L1 and Terminal 4 only.

In the first HIGH HEATING position, you should have continuity between Terminal L1 and Terminal C; and Terminal L1 and Terminal 1 only.

In the second HIGH HEATING position, you should have continuity between Terminal L1 and Terminal C; and Terminal L1 and Terminal 2 only.

In the LOW HEATING position, you should have continuity between Terminal L1 and Terminal C; and Terminal L1 and Terminal 4 only.

Be sure to check the switch in all positions and be sure you have continuity only on the terminals for the selected position. Lack of continuity or continuity on incorrect terminals designates a defective switch, and it must be replaced.

**FIG. C14**

**NOTE: Numbers without circles are the white ink stamped numbers.**

| POSITION | TERMINALS |
|---|---|
| OFF | |
| 1st HIGH FAN | L1 and 1 |
| 2nd HIGH FAN | L1 and 2 |
| LOW FAN | L1 and 4 |
| 1st HIGH COOLING | L1 and H; L1 and 1 |
| 2nd HIGH COOLING | L1 and H; L1 and 2 |
| LOW COOLING | L1 and H; L1 and 4 |
| 1st HIGH HEATING | L1 and C; L1 and 1 |
| 2nd HIGH HEATING | L1 and C; L1 and 2 |
| LOW HEATING | L1 and C; L1 and 4 |

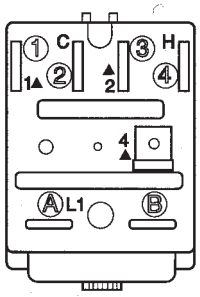


BACK VIEW OF TYPICAL SELECTOR SWITCH

# C10. Changeover Thermostat

The changeover thermostat is a capillary tube/bellows-type switch. Its function is to allow the compressor to operate only when outside ambient is 40° F. or warmer. See FIG. C15.

To check the changeover thermostat, first verify the air temperature at the capillary tube. If the temperatures are above 45°F., continuity should be between terminals 2 to 3 and no continuity between terminals 2 to 1. For temperatures below 40°F. , continuity should be between terminals 2 to 1 and no continuity between terminals 2 to 3.

**Note:** A defective changeover thermostat can keep the compressor from operating in the COOL or HEAT PUMP modes.

**FIG. C15**

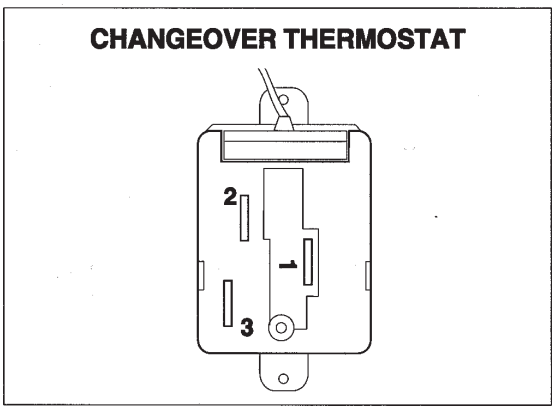


# C11. Remote Sensor

The remote sensor is used with the Comfort Control System to monitor and control the temperature in the different zones. Normally, a remote sensor is used for each unit or zone. A remote sensor is optional for Zone 1, or a single unit installation. See FIG. C16.

Ensure that the compressor is operational by:

1. Placing mode switch to cool.
2. Lower temperature setting to start compressor operation (approx. 2 min. time delay)
3. Once compressor is operational, adjust setting up to shut down compressor system.

Locate sensor attached to zone being tested. Using a hair dryer or other heat producing air device, GRADUALLY heat up the area surrounding the thermistor. **Ensure that device does not place excessive heat on plastic cover.** If compressor system comes on, sensor is operational. If the compressor does not come on, reverify connections at air conditioner. If the system is still not operational, unplug sensor from unit and verify its cable by checking the ohms. See FIG. C16 & 17.

**FIG. C16**

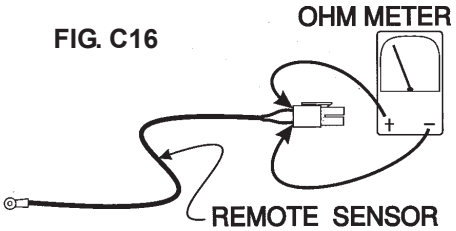

For the specific temperature surrounding the sensor, the ohms reading should be as follows:

| Room Temperature | Ohm Reading |
|---|---|
| 55°F | 11667 |
| 60°F | 10212 |
| 65°F | 8959 |
| 70°F | 7876 |
| 75°F | 6939 |
| 80°F | 6126 |
| 85°F | 5418 |
| 90°F | 4802 |
| 95°F | 4264 |
| 100°F | 3793 |

**Note:** Any ohms reading has a tolerance of plus or minus ±10% to be a good component. **A very precise and accurate ohm meter must be used before condemning the sensor.**

The proper location of the Remote Sensor is very important to ensure that a comfortable RV temperature is maintained. Observe the following rules when selecting a location.

- Locate the Remote Sensor 54" above the floor. Install the Remote Sensor on a partition, not on an outside wall. See Section A7.

FIG. C17

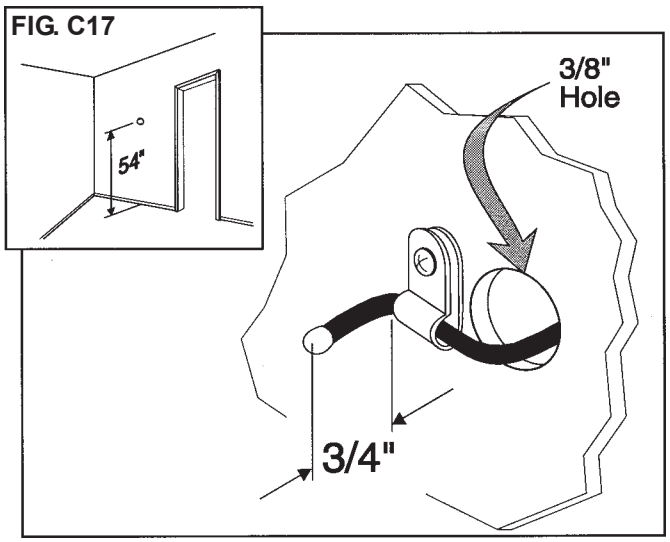


- **NEVER** expose it to direct heat from lamps, sun or other heat producing items.
- Avoid locations close to doors that lead outside, windows or adjoining outside walls.
- Avoid locations close to cold air supply registers.
- Avoid areas with air stagnation such as under cupboards.

Improper location can cause improper operation of the unit, such as repeated on/off cycle.

# C12. Ambient Sensor

The ambient sensor is the outside air temperature sensor and is used on heat pump units only. This component allows the heat pump to operate down to 24°F. See **Defrost Cycle** Section on page 21 for detailed information on operation.

To check the ambient sensor, first measure outside temperature surrounding the sensor. This is called "ambient". Next, unplug the ambient sensor (red plug) from the AC power module board. Now do an ohms test on the wire side of the plug. See FIG. C18.

FIG. C18

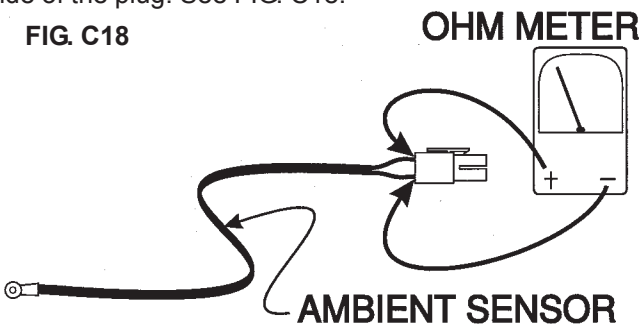


For the specific ambient (outside) temperature listed below, you should have the following readings:

| Ambient Temperature | Ohm Reading |
|---|---|
| 55°F | 11667 |
| 60°F | 10212 |
| 65°F | 8959 |
| 70°F | 7876 |
| 75°F | 6939 |
| 80°F | 6126 |
| 85°F | 5418 |
| 90°F | 4802 |
| 95°F | 4264 |
| 100°F | 3793 |

**Note:** Any ohms reading has a tolerance of plus or minus ±10% to be a good component. **A very precise and accurate ohm meter must be used before condemning the sensor.**

## C13. Reversing Valve

The reversing valve is the heart of the heat pump. It directs refrigerant flow to the coils to achieve proper direction of flow that allows the same system to supply heated or cooled air to enter the inside atmosphere of the structure according to occupants' desires.

The reversing valve's solenoid can be energized in either HEAT or COOL mode of operation. Most Duo-Therm Heat Pumps have the solenoid energized in the COOL mode of operation. The Dual (Model 39424) has the solenoid energized in the HEAT mode of operation. See FIG. C19. The solenoid on the reversing valve can be loose, this will cause a humming noise during the off cycle; especially is the blower shuts off with the compressor. Check the screw holding the solenoid coil on the reversing valve for tightness.

One way to check the reversing valve is to feel the refrigerant line at the top of the inside coil. In the COOL mode, this line will be cool or cold to the touch. In the HEAT mode, this line will be warm or hot to the touch. If you do not achieve these results, direction of refrigerant flow is not correct.

The ohms resistance of the reversing valve solenoid coil is approximately 465 ohms plus or minus (±) 10%. If ohms reading is within this range, the solenoid coil is good. If ohms reading is outside this range, replace the solenoid coil.

On Model 39424, verify AC volts are to the solenoid coil when in HEAT mode. If AC volts are NOT present, verify wiring is correct, especially to the 9-pin terminal connector. Check that the connection is completed through it. Next, verify power module board and the relay are good. If AC volts are present and solenoid coil is good, but refrigerant flow is not proper, the reversing valve assembly needs to be replaced.

On all other models verify AC volts to the solenoid coil when in COOL mode. If AC voltage is NOT present, verify wiring is correct, especially to the 6-pin terminal connector. Check that the connection is completed through it. Next, verify power module board is correct, then verify relay is correct. If AC volts are present and solenoid coil is good, but the refrigerant flow is not proper, the reversing valve assembly needs to be replaced.

FIG. C19

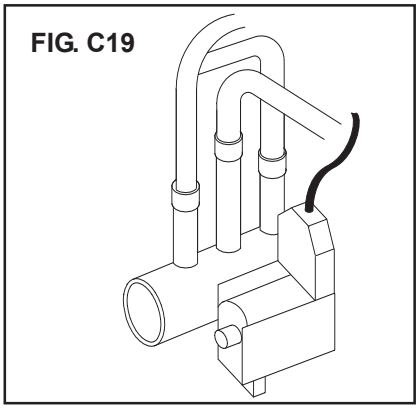

## C14. Transformer

The transformer supplies low AC volts for the control circuit on the following air conditioner models:

**39025.XXX, 39035.XXX and 39045.XXX**

The transformer is a 120 volt AC, 50/60 Hz. primary (line terminals) with a 24 volt AC secondary (load terminals), and will handle up to 20 volt-amps.

To check the transformer, first verify AC voltage is to the line terminals. Next, verify at least 24 volt AC is on the load terminals. If 24 volt AC is present on the load terminals, the transformer is good. If 24 volt AC is **NOT** present on the load terminals and AC voltage is present on the line terminals, the transformer is defective. See FIG. C20.

FIG. C20

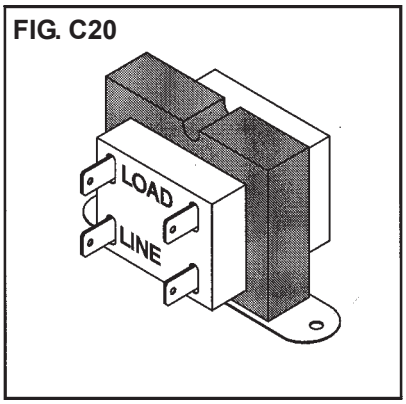


## C15. Fuse, DC

A 3-amp fuse is installed in the Analog Control Box and CCC Power Module to protect the system from shorts or overload created by disconnecting or reconnecting components, when DC power is still connected to the system.

One test is to remove the fuse and do a continuity check. No continuity requires the fuse to be replaced. Another test can be done without removing the fuse. Use a DC voltmeter to check between ground and to each side of the fuse. If there is voltage on one side only, the fuse is bad and requires replacement. See FIG. C21

FIG. C21

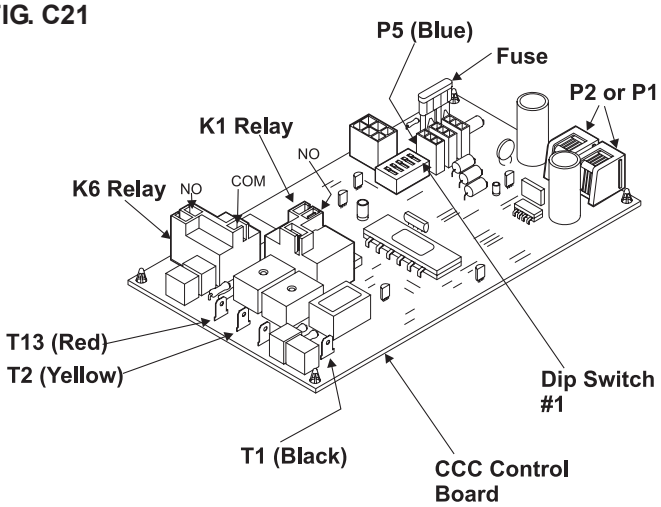

# C16. Relays

## C16a. Time Delay Relay

The time delay relay is used on Model **39424.601**. Its purpose if to provide a thirty second delay of power to Circuit 2 System after Circuit 1 System. To check the relay, use a voltmeter. Place one lead of voltmeter to Terminal 1 of relay. Thirty seconds after Terminal 1 receives AC volts, move voltmeter lead to Terminal 2 of relay. AC volts should be present.

FIG. C22

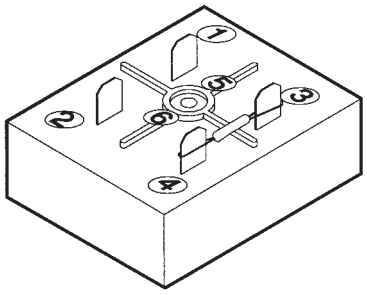


## C16b. Relay, SPST (single pole/single throw) used on Models 39224.601 and 39424.601.

On Model **39224.601**, it is used to complete the 115 volt AC circuit to the compressors, high fan and low fan. On Model **39424.601**, it is used to complete 115 volt AC to the reversing valves for Circuit 1 and Circuit 2.

The relay has a DC volt coil. The coil terminals are 1 and 3. When the coil is NOT energized (no power to terminals 1 and 3), no continuity will exist between terminals 4 to 2. When the coil is energized (power to terminals 1 and 3), continuity will exist between terminals 4 to 2.

FIG. C23

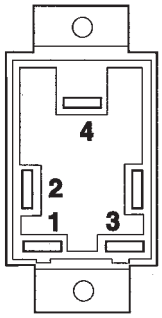


## C16c. Relay, SPST (single pole/single throw) is used on Models 39115.602, 39115.616 and 39115.626.

On these models it is used to complete 115 volt AC circuits to the compressor and for fan speeds.

The relay has a DC volt coil. To check the relay, first verify AC volts have been turned off to the unit.

Next, verify the relay coil is NOT energized (no DC power). No continuity should exist between terminals COM to NO. Energize the coil with DC volts (10 to 16). Continuity should exist between terminals COM and NO. If the above checks are correct, the relay is good - DO NOT replace it. If the previous checks are not correct, the relay is defective and should be replaced.

FIG. C24

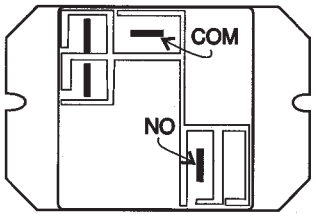


## C16c. Relay, SPDT (single pole/ double throw) is used on Models 390XX.XXX.

Controls the fan motor.

The relay has a 24 volt AC coil. To check the relay, first verify all AC volts have been turned off to the unit.

Next, remove the wires from COM and NC terminals. Verify the relay coil is not energized (no AC power). Continuity should exist between terminals COM and NO. Next, energize the relay coil with 24 volts AC. Continuity should exist between terminals COM and NO and no continuity between COM and NC. If the above checks are correct the relay is good - DO NOT replace it. If the above checks are not correct, the relay is defective and should be replaced.

FIG. C25

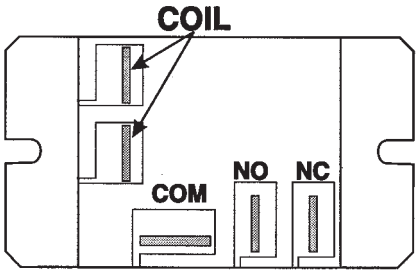

## C16e. Relay, SPDT (single pole/ double throw) is used on Models 39424.601, 39115.626, 39125.601, 39335.601 and 39335.636.

On Model 39424.601 it is used to complete 115 volt AC circuit to Circuit 2 compressor. On Models **39115.626**, **39125.601**, **39335.601** and **39335.636** it is a furnace blower relay.

The relay has a 115 volt AC coil.

Terminals 1 and 3 are the coil terminals. When the coil (terminals 1 and 3) is NOT energized (no power to terminals 1 and 3), continuity should exist between terminals 4 to 5; and no continuity between terminals 2 to 4.

When the coil (terminals 1 and 3) is energized (power to terminals 1 and 3), continuity should exist between terminals 2 to 4 and no continuity between terminals 4 to 5.

FIG. C26

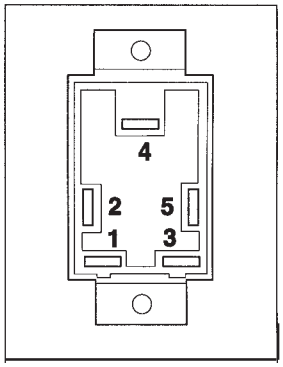


## C16f. Relay, SPDT (single pole/ double throw) is used on Models 39325.XXX and 39335.XXX.

On Model 39325.XXX it is used to complete the 115 volt AC circuit to the reversing valve.

On Model 39335.XXX is used to complete the 115 volt AC circuit to the reversing valve and to the furnace blower relay coil. The relay has a DC volt coil.

Terminals 1 and 3 are the coil terminals. When the coil (terminals 1 and 3) is NOT energized (no power to terminals 1 and 3), continuity should exist between terminals 4 to 5; and no continuity between terminals 2 to 4. When the coil (terminals 1 and 3) is energized (power to terminals 1 and 3), continuity should exist between terminals 2 to 4 and no continuity between terminals 4 to 5.

FIG. C27

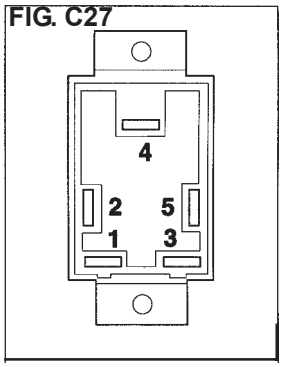


## C16g. Relay, SPDT (single pole/ double throw) is used on Models 39115.XXX, 39325.XXX, 39335.XXX and 39424.601.

On Models 39115.XXX, it controls HIGH and LOW FAN speeds. On Models 39325.XXX, 39335.XXX and 39424.601, it opens the control circuit for the fan motor when the coil is energized.

**Note:** Incorrect wiring to the thermostat can energize the relay coil on heat pump models 39325.XXX, 39335.XXX and 39424.601.

The relay has a DC volt coil. To check the relay, first verify all AC volts have been turned off to the unit.

Next, remove the wires from COM and NC terminals. Verify the relay coil is not energized (no DC power). Continuity should exist between terminals COM and NC and no continuity between terminals COM and NO. Next, energize the relay coil with DC volts (10 to 16). Continuity should exist between terminals COM and NO and no continuity between COM and NC. If the above checks are correct, the relay is good - DO NOT replace it. If the above checks are not correct, the relay is defective and should be replaced.

FIG. C28

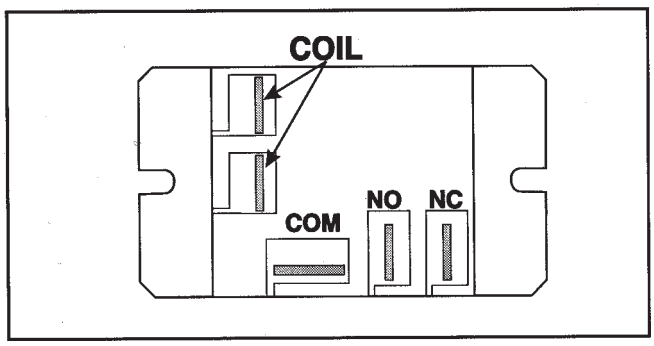


## C16h. Relay (9T91/120V)(SPDT)

The relay is used on basement air conditioner Model 39224 and basement heat pump Model **39424 ONLY**.

The relay has five terminals. Two terminals are not identified; they are the coil terminals. When the coil is not energized (no power to the coil terminals), continuity should exist between COM and NC and no continuity between COM to NO.

When the coil is energized (power to the coil terminals), continuity should exist between COM to NO and no continuity between COM to NC.

FIG. C29

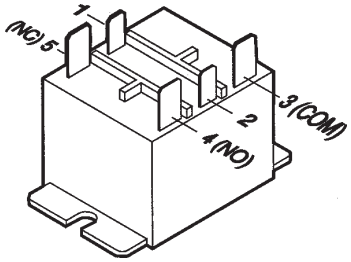

There are four relays used in Models 39224 and 39424. Two are used in the reversing valve circuit and are designated as HR (heat relay) on the wiring diagram. Two are used in the furnace blower circuit and are designated as FB (furnace blower) on the wiring diagram.

## C16i. Relay, 2-Pole Furnace Blower

The relay is used on basement air conditioner Model 39125 and Basement heat pump Model 39335 ONLY. The relay has five (5) terminals. **It is used to complete a circuit to the furnace.**

Terminals 1 and 3 are the coil terminals. When the coil (terminals 1 and 3) is not energized (no power to terminals 1 and 3), continuity should exist between terminals 4 to 5; and no continuity between terminals 2 to 4.

FIG. C30

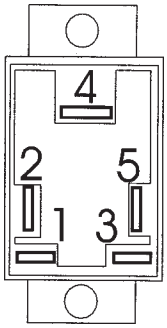


When the coil (terminals 1 and 3) is energized (power to terminals 1 and 3), continuity should exist between terminals 2 to 4 and no continuity between terminals 4 to 5. This relay is used to energize the furnace blower any time the compressor is energized. This circuit has been added to enhance both the cooling and heating operation.

**Note:** This circuit will not work with all furnaces.

Before using this circuit, check with the furnace manufacturer for proper wire connection to the furnace. Other components may or may not be required. Read and follow the instructions provided with the furnace.

**Instructions for Furnace Connections**

**⚠WARNING**

**The following furnace connection instructions only pertain to one specific furnace manufacturer, and may not apply to your installation.**

Run a 12 volt DC positive lead to one of the gray wires in the unit electrical box and secure with an approved connector.

Run a second lead from the furnace blower motor or terminal board to the remaining gray lead in the unit electrical box. Secure with an approved connector.

## C16j. Relay, (DPST)

The relay is a double pole, single throw and controls the fan motor in the roof mounted unit. When the AUX HEAT mode is selected or the outside temperature is too cold for HEAT PUMP operation and automatically goes to auxiliary operation, the relay will interrupt the circuit to the fan motor.

When COOL, OFF and HEAT PUMP modes are selected, the relay coil is not energized. When AUX HEAT mode is selected the relay coil is energized with 12V DC.

To check the relay, first remove the wires form COM and NC terminals. Next verify the relay coil is not energized (no DC power), continuity should exist between terminals COM and NC and no continuity between terminals COM and NO. Next energize the relay coil with DC volts (10 to 16). Continuity should exist between COM and NC, If the above checks are correct, the relay is good - DO NOT replace it. If the above checks are not correct, the relay is defective and should be replaced.

**Note:** Verify the thermostat is wired properly from the furnace, as incorrect polarity on the furnace thermostat wires will energize the relay coil and keep the fan motor from operating in the roof mounted unit.

FIG. C31

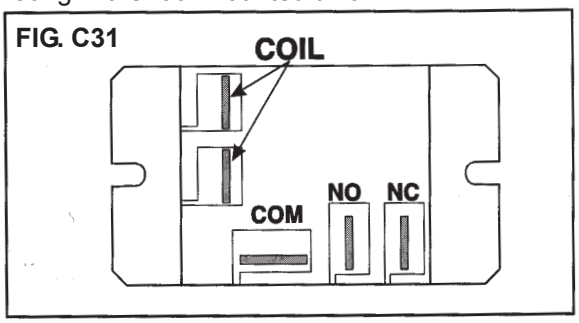


## C16k. Relay, Double Throw

The relay controls AC power to the reversing valve. There are two different relays used. One relay has a 12V DC rated coil and is used on all Duo-Therm Heat Pumps except the mechanical control types. The mechanical control Duo-Therm Heat Pumps use a relay that has a 120V AC rated coil. Both relays have five (5) terminals. Terminals 1 and 3 are the coil terminals. When the coil (terminals 1 and 3) is not energized (no power to terminals 1 and 3), continuity should exist between terminals 4 to5; and no continuity between terminals 2 to 4.

When the coil (terminals 1 and 3) is energized (power to terminals 1 and 3), continuity should exist between terminals 2 to 4 and no continuity between terminals 4 to 5.

**RELAY**

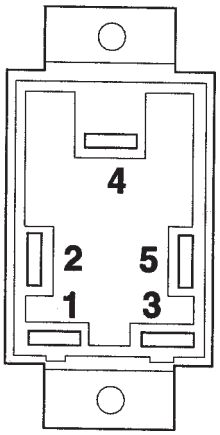

### C16l. Relay, DPST (double pole/ single throw) is used on Models 390XX.XXX.

**It controls the compressor.**

The relay has a 24 volt AC coil. To check the relay, first verify all AC volts have been turned off to the unit.

Next, remove the wires from terminals 2, 4, 6 and 8. Verify the coil (terminals 0 and 1) are not energized (no AC power). Continuity should not exist between terminals 2 to 4 or terminals 6 to 8. Next, energize the coil (terminals 2 to 4 and terminals 6 to 8. If the above checks are correct, the relay is good - DO NOT replace it. If the checks are not correct, the relay is defective - replace it.

FIG. C32

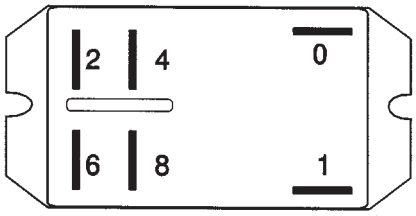


### C16m. Relay, DPST (double pole/ single throw) is used on Model 39424.601.

It controls HIGH FAN and LOW FAN on Circuit 1 and 2. If this relay is not wired correctly, Circuit 1 fan will not operate with Circuit 1 compressor.

The relay has a 120 volt AC coil. To check the relay, first verify all AC volts have been turned off to the unit.

Next remove the wires from terminals 2, 4, 6 and 8. Verify the coil (terminals 0 and 1) are not energized (no AC power). Continuity should not exist between terminals 2 to 4 or terminals 6 to 8. If the above checks are correct, the relay is good - DO NOT replace it. If the checks are not correct, the relay is defective - replace it.

FIG. C33

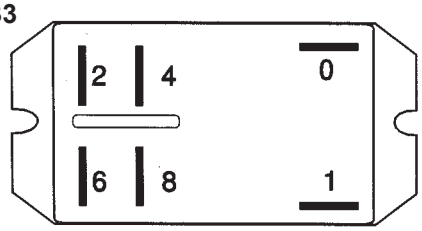


## C17. Printed Circuit Boards

### C17a. Circuit Board for Bi-Metal Thermostat

The relay board consists of a transformer, compressor relay, two fan relays and other components. If any one of these are defective, the complete relay board must be replaced.

The relay board completes circuits to the fan motor and compressor depending on what mode switch and temperature setting is on the thermostat.

Remove the cover from the electric box and verify the red wire is on terminal RC, black wire is on terminal G, blue wire is on terminal H and yellow wire is on terminal Y.

With AC power to the relay board, check between terminals RC and G or H. There should be 12 volts DC. If no voltage is detected, the transformer on the relay board is defective. Replace the relay board.

If 12 volts DC is available, disconnect power to the unit and remove the HI FAN wire (black) and the LOW FAN wire (red) and the compressor wire (large black) from the NO terminal on the compressor relay on the relay board.

FIG. C34

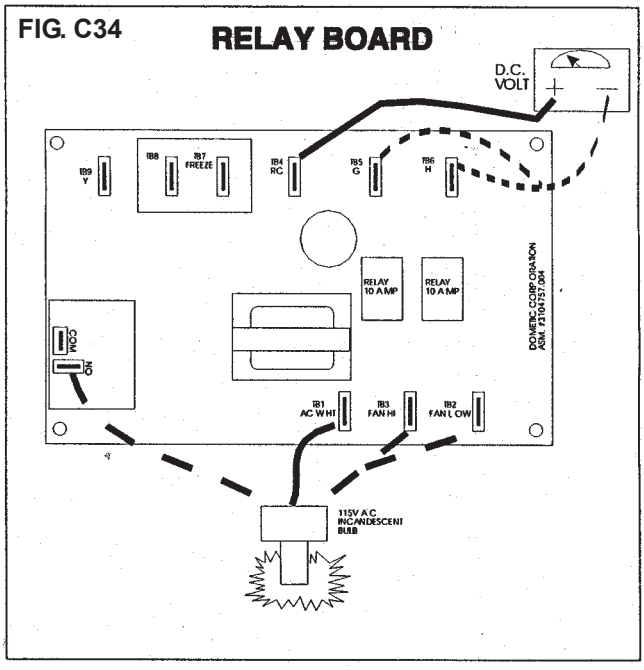


Next, remove the red, yellow, black and blue wires from terminals RC, Y, G and H on the relay board. Place a jumper from terminal RC to terminal Y. Provide power to the unit. Using an incandescent bulb, check from AC white terminal (one lead from bulb) to NO terminal on compressor relay on the relay board (other lead from bulb). The bulb should illuminate. Remove the jumper from terminal RC to terminal G. Now place one lead from bulb to AC white terminal and the other lead from bulb to LOW FAN terminal. The bulb should illuminate. Remove the jumper and the bulb should not illuminate Next, place a jumper from terminal

RC to terminals G and H. Now place one lead from bulb to AC white terminal and the other lead from bulb to AC white terminal and the other lead from bulb to HIGH FAN. The bulb should illuminate. Remove the jumper and the bulb should not illuminate. If these tests are correct, the relay board is good. DO NOT replace it. If any one of these tests are incorrect, replace the relay board.

## C17b. Analog Printed Circuit Board Control Box

The Analog Control Box comes in 3 different configurations, that are not interchangeable. The Analog Control Board consists of several relays, plug receptacles and other components. If any one of these are defective the **entire Analog Control Box should be replaced.**

The Analog Control Box works with the Analog Thermostat to change or switch AC circuits that control the operation of the Duo-Therm Unit.

**1. Air Conditioners**

To verify circuits are being completed by the Analog Control Box, you would first disconnect the 6-pin plug connector from the Analog Control Box.

Using a 115 volt AC incandescent bulb, check from terminal 5 (white-common) to the other terminals to determine if a particular circuit is completed through the Analog Control Box. If the Circuit is completed the light will illuminate.

- Terminal 1 is a blue wire and the compressor circuit.
- Terminal 2 is a black wire and the High Fan circuit.
- Terminal 3 is a yellow wire and not used.
- Terminal 4 is a red wire and the Low Fan circuit.
- Terminal 5 is a white wire and the common AC connection.
- Terminal 6 is a green/yellow wire and chassis ground.

**Note:** DO NOT use a voltmeter to do these checks as it will give erroneous readings.

**FIG. C35**

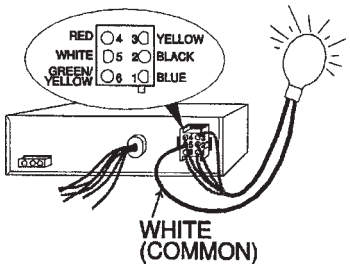


If the circuit is completed and a component is not operating, the problem is in the rooftop unit.

**2. Air Conditioners with Heat Strip**

To verify circuits are being completed by the Analog Control Box, you would first disconnect the 6-pin plug connector from the Analog Control Box.

Using a 115 volt AC incandescent bulb, check from terminal 5 (white-common) to the other terminals to determine if a particular circuit is completed through the Analog Control Box. If the circuit is completed the bulb will illuminate.

- Terminal 1 is a blue wire and the compressor circuit.
- Terminal 2 is a black wire and the High Fan circuit.
- Terminal 3 is a yellow wire and not used.
- Terminal 4 is a red wire and the Low Fan circuit.
- Terminal 5 is a white wire and the common AC connection.
- Terminal 6 is green/yellow wire and chassis ground.

To verify heat strip operation disconnect the 3-pin plug and using a 115 volt AC bulb, check from Terminal 1 to Terminal 3. If the circuit is completed the bulb will illuminate.

**Note:** DO NOT use a voltmeter to do these checks as it will give erroneous readings.

If the circuit is completed and a component is not operating, the problem is in the rooftop unit.

**3. Roof Top Heat Pump**

To verify circuits are being completed by the Analog control Box, you would first disconnect the 6-pin plug connector from the Analog Control Box.

Using a 115 volt AC incandescent bulb, check from terminal 5 (white-common) to the other terminals to determine if a particular circuit is completed through the Analog Control Box. If the circuit is completed, the light will illuminate.

- Terminal 1 is a blue wire and the compressor circuit.
- Terminal 2 is a black wire and the High Fan circuit.
- Terminal 3 is a yellow wire and reversing valve circuit. This circuit is energized in the cooling mode and not energized in the heat pump mode.
- Terminal 4 is a red wire and the Low Fan circuit.
- Terminal 5 is a white wire and the common AC connection.
- Terminal 6 is green/yellow wire and chassis ground.

**Note:** DO NOT use a voltmeter to do these checks as it will give erroneous readings.

If the circuit is completed and a component is not operating, the problem is in the rooftop unit.

**4. Basement Heat Pump**

To verify circuits are being completed by the Analog Control Board, you must remove the cover of the unit electrical box.

Using a 115 volt AC incandescent bulb, check from terminal "C" (white wire) on the Fan/Run capacitor to the terminals on the analog control board. If the circuit is completed the light will illuminate.

| | |
|---|---|
| Common Terminal (Black) | on K4 Relay 115 VAC Supply |
| No Terminal (Blue) | on K4 Relay Compressor |
| Terminal T1 (Black) | on Control Board High Fan |
| Terminal T2 (Red) | on Control Board Low Fan |
| Terminal No (Black) | on K5 Relay Reversing Valve |

**Note:** Do not use a volt meter to do these checks as it will give erroneous readings.

If the circuit is completed and a component is not operating, the problem is in the component of basement unit.

## C17c. Comfort Control Center Printed Circuit Board (AC Power Module Board/Control Box)

The AC power module board consists of relays, dip switches, plug receptacles and other components. If any one of these are defective, the complete control box must be replaced. Replace power module board on units that are not equipped with a replaceable control box. The 3-amp fuse is the only replaceable component.

The board is a signal receiver and completes AC volt circuits according to what signal it receives. Before diagnosing the AC power module, verify Configuration Operation, Comfort Control Center. Make sure DC volts are within operation range and 115 volts AC is supplied to the AC power module board.

**1. Roof Top Air Conditioners**

To verify circuits are being completed by the AC power module board, you would first disconnect the 6-pin plug connector from the electric kit.

FIG. C36

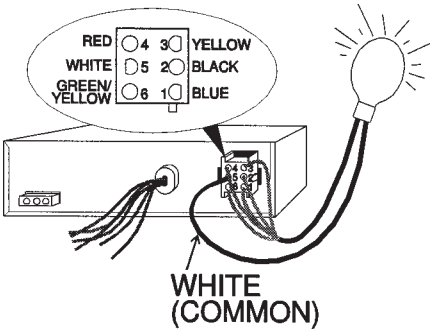


Using a 115 volt incandescent bulb, check from terminal 5 (white-common) to the other terminals to determine if a particular circuit is completed through the board. If the circuit is completed, the light will illuminate.

Terminal 1 is a blue wire and is the compressor circuit.
Terminal 2 is a black wire and is High Fan circuit.
Terminal 3 is a yellow wire and is Medium Fan circuit.
Terminal 4 is a red wire and is Low Fan circuit.
Terminal 5 is a white wire and is Common 115 V.
Terminal 6 is a green/yellow wire and is casing ground.

**Note:** DO NOT use a voltmeter to do these checks as it will give erroneous readings.

If the circuit is completed and that component is not operating, the problem is in the rooftop unit or the connection is not being completed through the connector.

**2. Rooftop Heat Pump**

To verify circuits are being completed by the AC power module board you would first disconnect the 6-plug connector from the electric kit.

Using a 115 volt incandescent bulb, check from terminal 5 (white-common) to the other terminals to determine if a particular circuit is completed through the board. If the circuit is completed, the light will illuminate.

Terminal 1 is a blue wire and is the compressor circuit.
Terminal 2 is a black wire and is High Fan circuit.
Terminal 3 is a yellow wire and is reversing valve circuit. This circuit is energized in cooling mode and not energized in the heat pump mode.
Terminal 4 is a red wire and is Low Fan circuit.
Terminal 5 is a white wire and is Common 115 V.
Terminal 6 is a green/yellow wire and is casing ground.

**Note:** DO NOT use a voltmeter to do these checks as it will give erroneous readings.

If the circuit is completed and that component is not operating, the problem is in the rooftop unit or the connection is not being completed through the connector.

It is possible to make the above checks on the board, if necessary.

**3. Single Basement Air Conditioner**

To verify circuits are being completed by the AC power module board, you would first remove the electric box cover and locate the AC power module board.

Using a 115 volt incandescent bulb, check from AC white (common) of incoming 115V AC; one lead from incandescent bulb, the other lead from incandescent bulb to the terminals listed below to determine if a particular circuit is completed through the board. If the circuit is completed, the light will illuminate.

FIG. C37

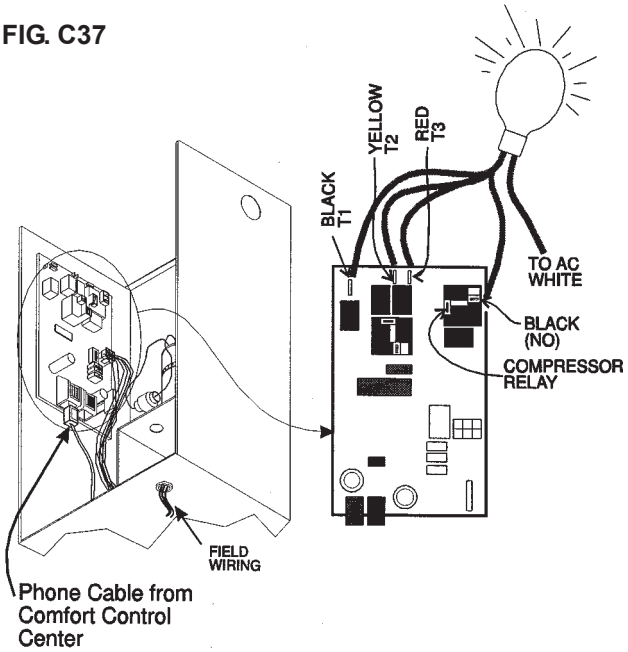


NO on compressor relay is black wire and is compressor circuit.
Terminal T1 is a black wire and is High Fan circuit.
Terminal T2 is jumpered to T1 terminal.
Terminal T3 is a red wire and is Low Fan circuit.

**Note:** DO NOT use a voltmeter to do these checks as it will give erroneous readings.

If the circuit is completed and that component is not operating, the problem is in the wiring to the component or the component.

**4. Single Basement Heat Pump**

To verify circuits are being completed by the AC power module board, you would first remove the electric box cover and locate the AC power module board.

FIG. C38

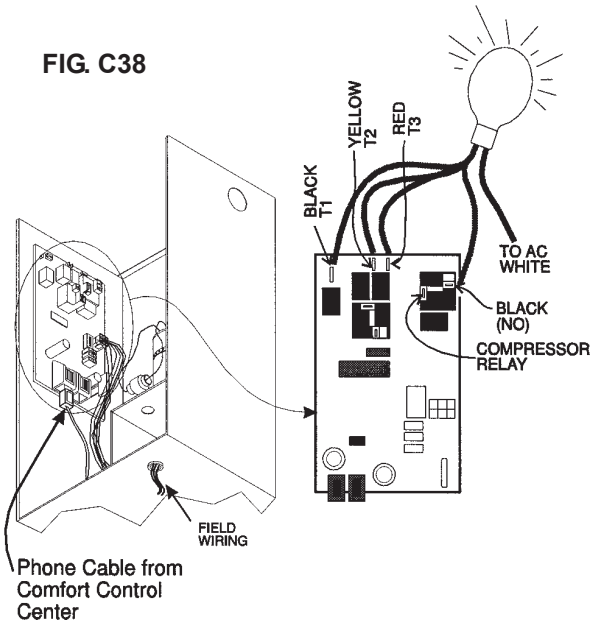


Using a 115 volt incandescent bulb, check from AC white (common) of incoming 115V AC; one lead from incandescent bulb and the other lead from incandescent bulb to the terminals listed below to determine if a particular circuit is completed through the board. If the circuit is completed, the light will illuminate.

NO on compressor relay is a black wire and is compressor circuit.
Terminal T1 is a black wire and is High Fan circuit.
Terminal T2 is a black wire and is Reversing Valve circuit. This circuit is energized in cooling mode and NOT energized in the Heat Pump mode.
Terminal T3 is a red wire and is Low Fan circuit.

**Note:** DO NOT use a voltmeter to de these checks as it will give erroneous readings.

If the circuit is completed and that component is not operating, the problem is in the wiring to the component or the component.

**5. Dual Basement Air Conditioner and Heat Pump**

To verify circuits are being completed by the AC power module board you would first disconnect the two 9-pin connectors that connect the electric kit to the unit.

Using a 115V incandescent bulb, check from Terminal 4 (white wire) 115V common to the other terminals to determine if a particular circuit is completed through the board. If the circuit is completed, the light will illuminate.

FIG. C39

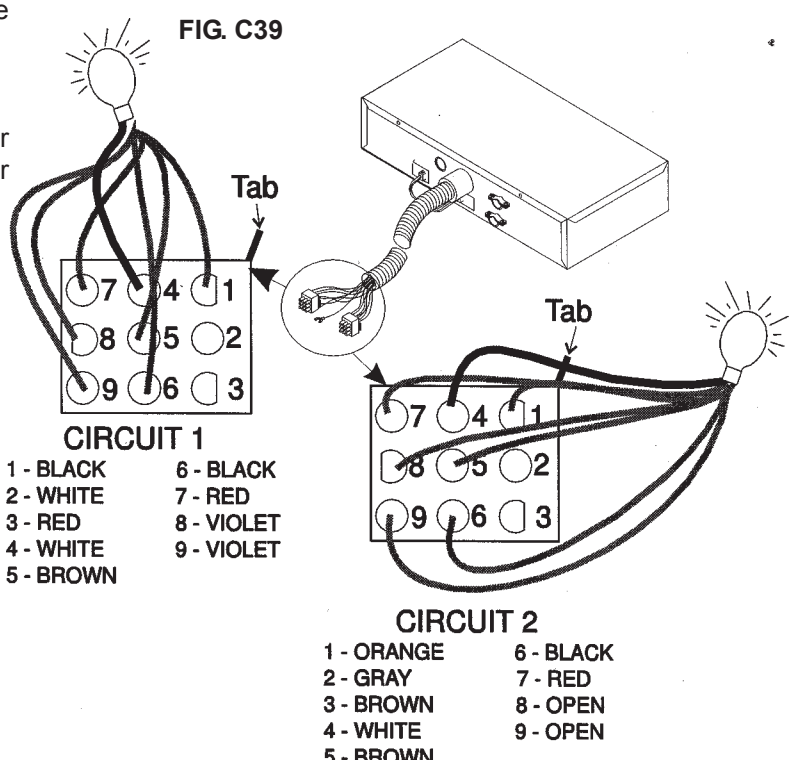

**Circuit 1:**
Terminal 1 is a black wire and is compressor circuit
Terminal 2 is a white wire and is run circuit to compressor.
**DO NOT TEST.**
Terminal 3 is a red wire and is start circuit to compressor.
**DO NOT TEST.**
Terminal 4 is a white wire and is 115V common.
Terminal 5 is a brown wire and is fan capacitor circuit to fan motor.
**DO NOT TEST.**
Terminal 6 is a black wire and is high fan circuit.
Terminal 7 is a red wire and is low fan circuit.
Terminal 8 is a violet wire and is 115V common.
Terminal 9 is a violet wire and is reversing valve circuit.
This circuit is energized in heat pump mode only.

**Note:** DO NOT use a volt meter to do these checks as it will give erroneous readings.

**Circuit 2:**
Terminal 1 is an orange wire and is compressor circuit.
Terminal 2 is a gray wire and run circuit to compressor.
**DO NOT TEST.**
Terminal 3 is a brown wire and is start circuit to compressor.
**DO NOT TEST.**
Terminal 4 is a white wire and is 115V common.
Terminal 5 is a brown wire and is fan capacitor circuit to fan motor.
**DO NOT TEST.**
Terminal 6 is a black wire and is high fan circuit.
Terminal 7 is a red wire and is high fan circuit.
Terminals 8 & 9 are open.

**Note:** The circuit 2 AC power module board is the one that is staged and will have a delay fro the Circuit 1 system. Verify that Circuit 2 should be operating before start of diagnosis.

**Note:** DO NOT use a volt meter to do these checks as it will give erroneous readings.

# C18. Thermostat

There are four types of thermostats used on Duo-Therm units. Each type is explained in this section.

## C18a. Mechanical Thermostat

FIG. C40

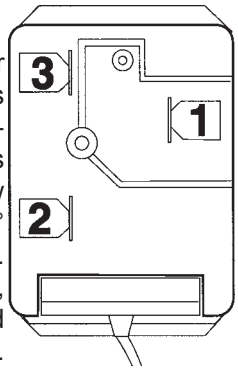


The mechanical thermostat used for air conditioners has 2 terminals. It controls the on and off cycling of the compressor. The air temperature of 65° F or less around the sensor tube will not allow the compressor to start and over 90° F, the compressor will run constantly. To check the thermostat for operation, turn the air conditioner breaker off, and disconnect the wires to the thermostat. Turn the control knob clockwise to cooler. You should have continuity. Turn the thermostat knob counter clockwise to warmer and no continuity should be present. This type is used on the mechanical series of heat pumps. The thermostat controls the ON/OFF cycling of the compressor. It has three terminals. Air temperature between 65° F and 90° F will allow the thermostat to cycle the compressor. In the heat pump mode the compressor will not shut off if the temperature is below 65° F, unless the changeover thermostat reaches 40° F. See Section C10, page 32. If the temperature is over 90° F, the compressor will not operate in the heat pump mode. The reverse is true for air conditioning operation. To check the thermostat for operation, turn the heat pump circuit breaker off, and disconnect the wires to the thermostat. Turn the control knob to COOLER. You should have continuity between Terminals 2 to 3 and **no** continuity between Terminal 2 to 1. Turn the thermostat to WARMER. You should **not** have continuity between Terminals 2 to 3; and have continuity between Terminal 2 to 1. If you have incorrect readings, replace the thermostat. If you have the readings as indicated above, DO NOT replace the thermostat.

## C18b. Bimetal Thermostat

This thermostat is designed to operate 12V DC single-stage heat pump and an independent single-stage auxiliary heat system. It is a manual changeover thermostat between heating, cooling and auxiliary heat. Operating temperatures for both heating and cooling systems are changeable to suit the comfort needs of the occupants.

This thermostat is used for a remote wall mounted thermostat. The heat pump can have an air distribution box or a ducted system. Next, verify wiring to the thermostat is correct.

Thermostat Wiring for Dometic Bimetal Thermostat:
Route the (10) conductor cable from the 14" x 14" opening to the thermostat location. Leave enough cable within the 14" x 14" opening to connector to the low voltage cable. At the thermostat location, leave about six (6") inches of cable extending through the wall. Plug the thermostat cable into the thermostat connector cable.

When an auxiliary furnace is used with the heat pump, a two conductor cable must be routed from the furnace to the thermostat location. Connect one wire from the furnace to the violet wires with a wire nut. Connect the other wire from the furnace to the green wire in the thermostat cable and secure with a wire nut. Tuck the excess wire back into the wall and fill opening with insulation to prevent drafts that could affect the thermostat operation. Secure the thermostat to the wall using the two screws.

**Note:** Verify the heat anticipator is set properly for the auxiliary furnace. Failure to set the anticipator can cause incorrect operation or failure of thermostat in AUX HEAT or HEAT PUMP setting.

Before checking the thermostat for operation, first determine that the thermostat is receiving DC power from the relay board then disconnect the cable assembly from the back of the thermostat.

Next, use a DC voltmeter and check from red wire or Pin 2 on cable assembly (positive [+] lead from voltmeter) to brown wire or Pin 7 (negative [-] lead from voltmeter). You should get a voltage reading of approximately 12V DC. Next, move the negative (-) lead from the voltmeter to each of the following wires or pins:

**Blue (Pin 6), Yellow (Pin 5), Black (Pin 4), White (Pin 3).** You should get a voltage reading of approximately 12V DC on each wire. This indicates the relay board and cable assembly are providing proper power and circuits to the thermostat.
**Note:** Pin 2 (red wire) is positive DC volts when ambient (outside) air is above 40°F. Pin 1 (violet wire) is positive DC volts when ambient (outside) air is below 40°F.

If the voltage checks are correct and the unit does not operate correctly, check the thermostat. If the voltage checks are not as described, check the relay board (Section C17a and the cable assembly - C19).

**FIG. C41** **THERMOSTAT CONNECTIONS**

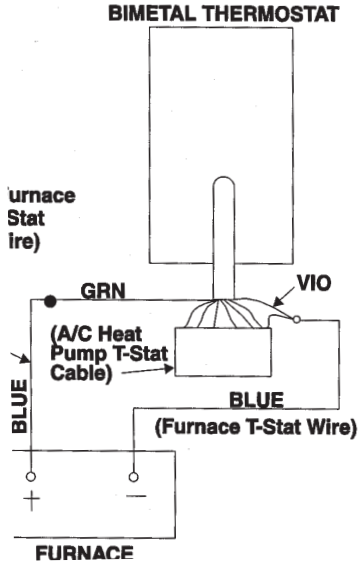


To check the thermostat, first remove it from its mounting on the wall. Then disconnect the thermostat assembly from the cable assembly in the wall. Now you are ready to do a continuity check on the thermostat assembly. Place the positive (+) lead from the ohm meter on red wire (Pin 2) and negative (-) lead from the ohm meter to the active pin or wire to read continuity. **Polarity is important for proper check to be done.**
With System Switch in COOL, Fan Switch in HI AUTO and room temperature ABOVE setpoint temperature, you should have continuity between red wire (Pin 2) to black wire (Pin 4), yellow wire (Pin 5) and blue wire (Pin 6). You should NOT have continuity between red wire to violet or white wires.

**FIG. C42**

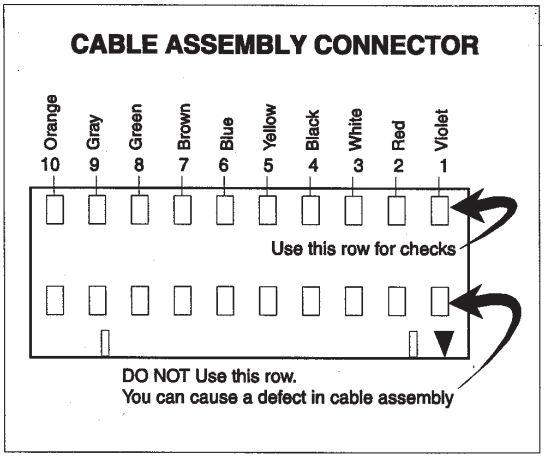


With room temperature BELOW setpoint temperature, you should NOT have continuity between red wire to violet, white, black, yellow or blue wires.

With System Switch in COOL, Fan Switch in LOW AUTO and room temperature ABOVE setpoint temperature, you should have continuity between red wire (Pin 2) to black wire (Pin 4) and yellow wire (Pin 5). You should NOT have continuity between red wire to violet, white or blue wires. With room temperature BELOW setpoint temperature, you should NOT have continuity between red wire to violet, white, black, yellow or blue wires.

With System Switch in COOL, Fan Switch in LOW ON and room temperature ABOVE setpoint temperature you should have continuity between red wire (Pin 2) to black wire (Pin 4) and yellow wire (Pin 5). You should NOT have continuity between red wire to violet, white, or blue wires. With room temperature BELOW setpoint temperature, you should have continuity between red wire (Pin 2) to black wire (Pin 4 ). You should NOT have continuity between red wire to violet, white, yellow or blue wires.

With System Switch in COOL, Fan Switch in HI ON and room temperature ABOVE setpoint temperature you should have continuity between red wire (Pin 2) to black wire (Pin 4), yellow wire (Pin 5) and blue wire (Pin 6). You should NOT have continuity between red wire to violet or white wires. With room temperature BELOW setpoint temperature, you should have continuity between red wire (Pin 2) to black wire (Pin 4) and blue wire (Pin 6). You should NOT have continuity between red wire to violet, white or yellow wires.

With System Switch in OFF, Fan Switch in HI AUTO or LOW AUTO and room temperature ABOVE or BELOW setpoint temperature, you should NOT have continuity between red wire to violet, white, black, yellow or blue wires.

With System Switch in OFF, Fan Switch in LOW ON and room temperature ABOVE or BELOW setpoint temperature, you should have continuity between red wire (Pin 2) to black wire (Pin 4). You should NOT have continuity between red wire to violet, white, yellow or blue wires.

With System Switch in OFF, Fan Switch in HI ON and room temperature ABOVE or BELOW setpoint temperature, you should have continuity between red wire (Pin 2) to black wire (Pin 4) and blue wire (Pin 6). You should NOT have continuity between red wire to violet, white or yellow wires.

With System Switch in HEAT PUMP, Fan Switch in HI AUTO and room temperature ABOVE setpoint temperature, you should NOT have continuity between red wire to violet, white, black yellow or blue wires. With room temperature BELOW setpoint temperature, you should have continuity between red wire (Pin 2) to white wire (Pin 3), black wire (Pin 4), and blue wire (Pin 6). You should NOT have continuity between red wire to violet or yellow wires.

With System Switch in HEAT PUMP, Fan Switch in LOW AUTO and room temperature ABOVE setpoint temperature, you should NOT have continuity between red wire to violet, white, black, yellow or blue wires. With room temperature BELOW setpoint temperature, you should have continuity between red wire (Pin 2) to white wire (Pin 3) and black wire (Pin 4). You should NOT have continuity between red wire to violet, yellow or blue wires.

With System Switch in HEAT PUMP, Fan Switch in LOW ON and room temperature ABOVE setpoint temperature, you should have continuity between red wire (Pin 2) to black wire (Pin 4). With room temperature BELOW setpoint temperature, you should have continuity between red wire (Pin 2) to white wire (Pin 3) and black wire (Pin 4). You should NOT have continuity from red wire to violet, yellow or blue wires.

With System Switch in HEAT PUMP, Fan Switch in HI ON and room temperature ABOVE setpoint temperature, you should have continuity between red wire (Pin 2) to black wire (Pin 4) and blue wire (Pin 6). You should NOT have continuity between red wire to violet, white or yellow wires. With room temperature BELOW setpoint temperature, you should have continuity between red wire (Pin 2) to white wire (Pin 3), black wire (Pin 4) and blue wire (Pin 6). You should NOT have continuity between red wire to violet or yellow wires.

With System Switch in AUX HEAT, Fan Switch in HI AUTO and room temperature ABOVE setpoint temperature, you should NOT have continuity between red wire to violet, white, black yellow or blue wires. With room temperature BELOW setpoint temperature, you should have continuity between violet wire (Pin 1) and green wire. You should NOT have continuity between red wire to violet, white, black , yellow or blue wires.

With System Switch in AUX HEAT, Fan Switch in LOW AUTO and room temperature ABOVE setpoint temperature, you should NOT have continuity between red wire to violet, white, black, yellow or blue wires. With room temperature BELOW setpoint temperatures, you should have continuity between violet wire (Pin 1) and green wire. You should NOT have continuity between red wire to violet, white, black, yellow or blue wires.

**FIG. C43**

PIN 1 - VIOLET WIRE
PIN 2 - RED WIRE
PIN 3 - WHITE WIRE
PIN 4 - BLACK WIRE
PIN 5 - YELLOW WIRE
PIN 6 - BLUE WIRE

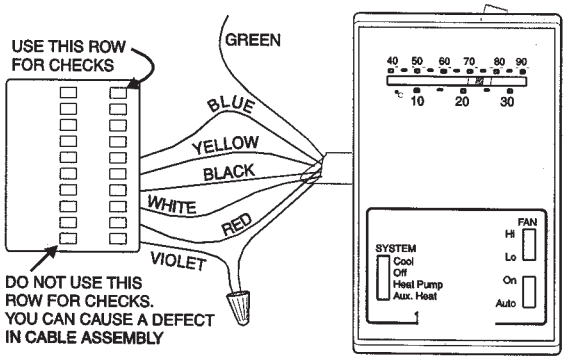


With System Switch in AUX HEAT, Fan Switch in LOW ON and room temperature ABOVE setpoint temperature, you should have continuity between red wire (Pin 2) to black wire (Pin 4). You should NOT have continuity between red wire to violet, white, yellow or blue wires. With room temperature BELOW setpoint temperature, you should have continuity between red wire (Pin 2) to black wire (Pin 4) and between violet wire (Pin 1) to green wire. You should NOT have continuity between red wire to violet, white, yellow or blue wires.

With System Switch in AUX HEAT, Fan Switch in HI ON and room temperature ABOVE setpoint temperature, you should have continuity between red wire (Pin 2) to black wire (Pin 4) and blue wire (Pin 6). You should NOT have continuity between red wire to violet, white or yellow wires. With room temperature BELOW setpoint temperature, you should have continuity between red wire (Pin 2) to black wire (Pin 4) and blue wire (Pin 6) and between violet wire (Pin 1) and green wire. You should NOT have continuity between red wire to violet, white or yellow wires.

**Switch Combinations and their Corresponding "Active" Terminals**

To check "ACTIVE" terminals, place the positive (+) lead from the ohm meter on Pin 2 or red wire and negative (-) lead from ohm meter to the "active" pin or wire to read continuity.

With System Switch in AUX HEAT and room temperature BELOW setpoint temperature, continuity will exist between violet wire and green wire. With room temperature ABOVE setpoint temperature, continuity will NOT exist between violet and green wire.

| SWITCH COMBINATIONS | | If room Temp. Is Above/ Below setpoint temp: | Terminals that are "ON" | | | | |
|---|---|---|---|---|---|---|---|
| System Switch | Fan Switch | | Pin 3 White | Pin 1 Violet | Pin 5 Yellow | Pin 6 Blue | Pin 4 Black |
| COOL | HI Auto | Above | | | ✓ | ✓ | ✓ |
| | | Below | | | | | |
| | LO Auto | Above | | | ✓ | | ✓ |
| | | Below | | | | | |
| | LO On | Above | | | ✓ | | ✓ |
| | | Below | | | | | ✓ |
| | HI On | Above | | | ✓ | ✓ | ✓ |
| | | Below | | | | ✓ | ✓ |
| OFF | HI Auto | Above | | | | | |
| | | Below | | | | | |
| | LO Auto | Above | | | | | |
| | | Below | | | | | |
| | LO On | Above | | | | | ✓ |
| | | Below | | | | | ✓ |
| | HI On | Above | | | | ✓ | ✓ |
| | | Below | | | | ✓ | ✓ |
| HEAT PUMP | HI Auto | Above | | | | | |
| | | Below | ✓ | | | ✓ | ✓ |
| | LO Auto | Above | | | | | |
| | | Below | ✓ | | | | ✓ |
| | LO On | Above | | | | | ✓ |
| | | Below | ✓ | | | | ✓ |
| | HI On | Above | | | | ✓ | ✓ |
| | | Below | ✓ | | | ✓ | ✓ |
| AUX HEAT | HI Auto | Above | | | | | |
| | | Below | | | | | |
| | LO Auto | Above | | | | | |
| | | Below | | | | | |
| | LO On | Above | | | | | ✓ |
| | | Below | | | | | ✓ |
| | HI On | Above | | | | ✓ | ✓ |
| | | Below | | | | ✓ | ✓ |

**Bi Metal 24 volt AC Thermostat**
**Model 39015.601 and 39025.501**

Two thermostats were used on these models: a cooling only thermostat and a heating and cooling thermostat. Both are 24V AC controlled systems.

On the base of the cooling only thermostat, there is a FAN switch with two positions, AUTO and ON. This operates the air conditioner only. A separate thermostat is needed for the furnace.

Verify that the thermostat wiring is correct.

FIG. C44

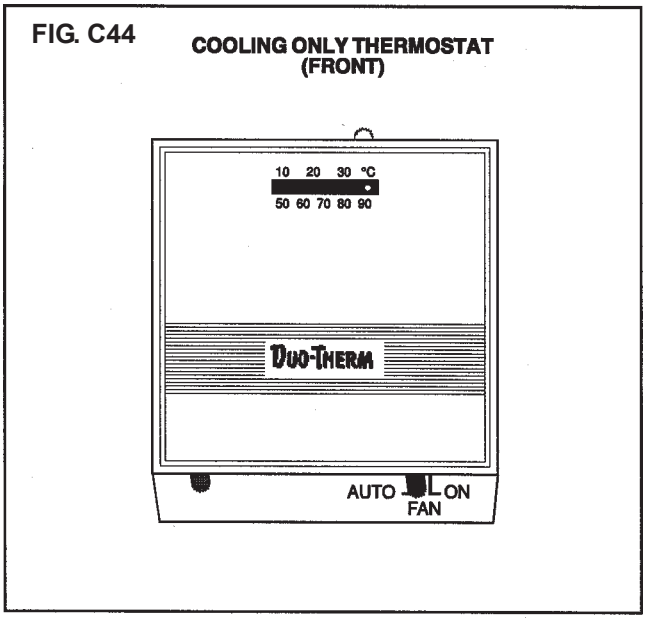


A three connector cable 18 to 22 AWG is to be used for low voltage connections. Low voltage wires in the control compartment are marked "R", "G" and "Y". Route low voltage cable from thermostat to unit electrical box. See Section C19.

Connect "R" from thermostat to red wire in control compartment. Connect "G" from thermostat to blue wire in control box. Connect "Y" from thermostat to yellow wire in control box. Use wire nuts to ensure good connections. To check the thermostat, be sure the OFF switch is all the way to the right side. Next, disconnect all three wires at the terminals R, G and Y.

Next, using an ohmmeter, check for continuity between R and G and/or Y in the following manner. With room temperature above the set point temperature and FAN switch in AUTO position, continuity should exist between R to Y and R to G. With room temperature below the set point and FAN switch AUTO position, no continuity should exist between R to Y and R to G.

With FAN switch to ON position, continuity should exist between R to G regardless of room temperature.

FIG. C45

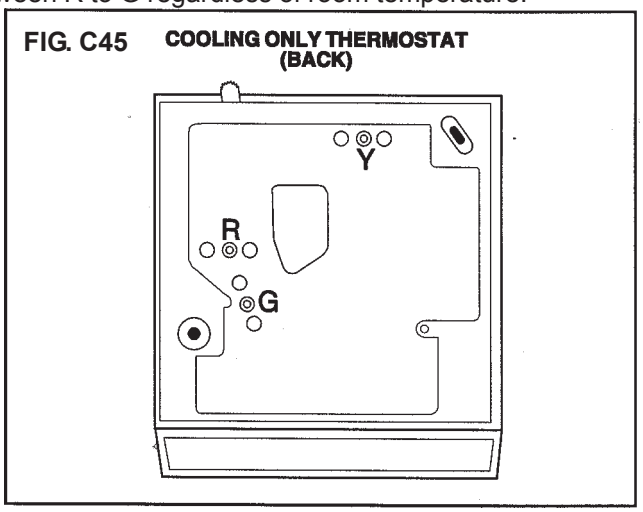

To check ACTIVE terminals, place one lead from ohm meter to R terminal and the other lead to the ACTIVE terminal.

| SWITCH COMB. FAN SWITCH | IF ROOM TEMP. IS ABOVE/BELOW SETPOINT TEMP. | TERMINALS THAT ARE "ON" | |
|---|---|---|---|
| | | G | Y |
| AUTO | ABOVE | X | X |
| | BELOW | | |
| ON | ABOVE | X | X |
| | BELOW | X | |

The heating and cooling thermostat has two switches on the base. They are HEAT-OFF-COOL on the left side, and FAN-AUTO-ON on the right. This thermostat will operate an air conditioner and a furnace.

FIG. C46 HEATING AND COOLING THERMOSTAT (FRONT)

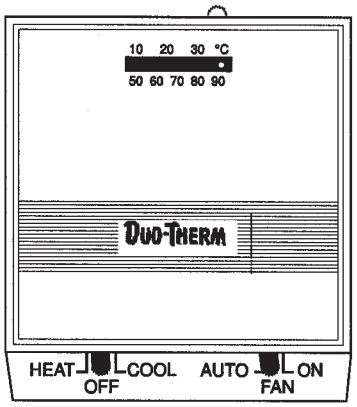


Verify that the wiring to the thermostat is correct.

A three-connector cable 18 to 22 AWG is to be used for low voltage connections. Low voltage wires in the control compartment are marked "R", "G" and "Y". Route low voltage cable from thermostat to unit electrical box. Use .50 dia. snap-bushing for routing cable into electrical box. Se Section C19.

Connect RC from thermostat to red wire in control compartment. Connect G or F from thermostat to blue wire in control box. Connect Y from thermostat to yellow wire in control box. Use wire nuts to ensure good connections.

When connecting a gas furnace to this thermostat, the RH and W terminals are used.

To check the thermostat remove all wires. Next, using an ohm meter, put the HEAT-OFF-COOL switch in the COOL position. With room temperature above the setpoint temperature and FAN switch in AUTO position, continuity should exist between RC to Y and RC to G. With room temperature below set point temperatures, no continuity should exist between RC to Y and RC to G. With FAN switch to ON position, continuity should exist between RC to G regardless of room temperature.

With HEAT-OFF-COOL switch in the OFF position and FAN switch in the AUTO position, no continuity should exist between RC to Y and RC to G regardless of room temperature. With FAN switch to ON position, continuity should exist between RC to G and no continuity between RC to Y regardless of room temperature.

With HEAT-OFF-COOL switch to HEAT and FAN switch to AUTO position, no continuity should exist between RC to Y and RC to G regardless of room temperature. With FAN switch to ON position, continuity should exist between RC to G and no continuity between RC to Y regardless of room temperature. With room temperature below setpoint temperature, continuity should exist between RH to W. With room temperature above setpoint temperature no continuity should exist between RH to W.

FIG. C47 HEATING AND COOLING THERMOSTAT (BACK)

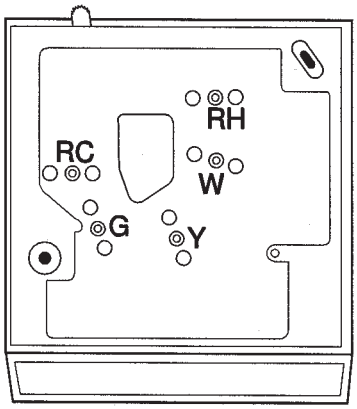


To check ACTIVE terminals, place one lead from ohm meter to RC (cooling) or RH (heating) terminal and the other lead to the ACTIVE (ON) terminal.

| SWITCH COMBINATION | | IF ROOM TEMP. IS ABOVE/BELOW SETPOINT TEMP. | TERMINALS THAT ARE "ON" | | |
|---|---|---|---|---|---|
| SYSTEM SWITCH | FAN SWITCH | | G | Y | W |
| COOL | AUTO | ABOVE | X | X | |
| | | BELOW | | | |
| | ON | ABOVE | X | X | |
| | | BELOW | X | | |
| OFF | AUTO | ABOVE | | | |
| | | BELOW | | | |
| | ON | ABOVE | X | | |
| | | BELOW | X | | |
| HEAT | AUTO | ABOVE | | | |
| | | BELOW | | | X |
| | ON | ABOVE | X | | |
| | | BELOW | X | | X |

**Models 39025.502, 39035.601, 39045.601 & 39045.616**
The thermostat is a 24V AC controlled system and is a bimetal type. It has two switches on the face of the thermostat. On the left side there is a SYSTEM switch and on the right side there is a FAN switch. This thermostat will operate an air conditioner and a furnace.

**FIG. C48**

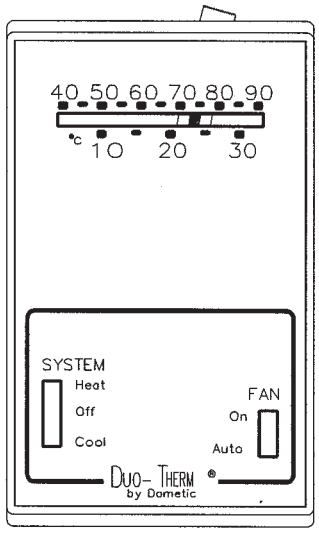


Verify the thermostat wiring is correct.

A three-conductor cable 18 to 22 AWG is to be used for low voltage connections. Route low voltage cable from thermostat to unit electrical box. Use .50 dia. snap-bushing for routing cable into electrical box. See Section C19.

Connect **R** from thermostat to red wire in control compartment. Connect **G** or **F** from thermostat to blue wire in control box. Connect **Y** from thermostat to yellow wire in control box. Use wire nuts to ensure good connections.

When connecting a gas furnace to Dometic's Heat/Cool thermostat, the **W** and **R** terminals are used. This means there will be two wires on the **R** terminal (one wire from the furnace and one wire from the air conditioner).

To check the thermostat, remove all wires. Next, using an ohm meter with the SYSTEM switch in COOL position and the FAN switch in AUTO position and the room temperature above the setpoint temperature, continuity should exist between **R** to **Y** and **R** to **G**. No continuity should exist between **R** to **W**. With room temperature below setpoint temperature, no continuity should exist between **R** to **Y, R** to **W** and **R** to **G**. With the FAN switch to ON position and the room temperature above the set point temperature continuity should exist between **R** to **Y** and **R** to **G**. No continuity should exist between **R** to **W**. With the room temperature below the set point temperature, continuity should exist between R to G and no continuity between R to Y and R to W.

With the SYSTEM switch in OFF position and the FAN switch in AUTO position, no continuity should exist **R** to **Y, R** to **G** and **R** to **W**. With the FAN switch to ON position, continuity should exist between **R** to **G** and no continuity between **R** to **Y** and **R** to **W** regardless of room temperature.

With the SYSTEM switch in HEAT position, FAN switch in AUTO and room temperature above setpoint temperature, no continuity should exist between **R** to **Y, R** to **G** and **R** to **W**. With room temperature below setpoint temperature, continuity should exist between **R** to **W** and no continuity between **R** to **Y** and **R** to **G**. With the FAN switch to ON, continuity should exist between **R** to **G** regardless of room temperature.

To check ACTIVE terminals, place one lead from the ohm meter to the **R** terminal and the other lead from the meter to the ACTIVE (ON) terminal.

| SWITCH COMBINATION | | IF ROOM TEMP. IS ABOVE/BELOW SETPOINT TEMP. | TERMINALS THAT ARE "ON" | | |
|---|---|---|---|---|---|
| SYSTEM SWITCH | FAN SWITCH | | G | Y | W |
| COOL | AUTO | ABOVE | X | X | |
| | | BELOW | | | |
| | ON | ABOVE | X | X | |
| | | BELOW | X | | |
| OFF | AUTO | ABOVE | | | |
| | | BELOW | | | |
| | ON | ABOVE | X | | |
| | | BELOW | X | | |
| HEAT | AUTO | ABOVE | | | |
| | | BELOW | | | X |
| | ON | ABOVE | X | | |
| | | BELOW | X | | X |

**Models 39115.601, 39115.602, 39115.616 & 39115.626**
The thermostat is a 12V DC controlled system and is a bimetal type. It has three (3) switches on the face of the thermostat. On the left side there is a SYSTEM switch and on the right side there are two FAN switches. The top switch is for HI or LOW FAN and the bottom one is for ON or AUTO. This thermostat will operate and air conditioner and a furnace.

FIG. C49

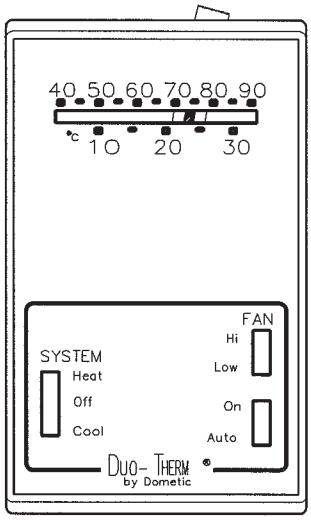


Verify the wiring is correct.

A 2-conductor cable, 18 to 22 AWG is required for the 12V DC power source. This can be routed into the system at either the unit of the thermostat.

Select the shortest direct route between the power supply and the system. A negative wire must be supplied. Frame work grounding is not adequate.

At the unit, route both leads from the 12V DC supply and the four wires from the thermostat up through the plastic bushing in the bottom left of the electric box for connection.

Or at the thermostat, route both leads fro the 12V DC supply through the wall and behind the thermostat. Route the four wires from the thermostat up through the plastic bushing in the bottom left of the electric box for connection.

For furnace hookup or use of another thermostat, consult the installation instructions provided with the furnace and/or the thermostat. Normally, the furnace will connect to the **RH** and **W** terminals of the thermostat.

**WIRE CONNECTIONS:**

FIG. C50

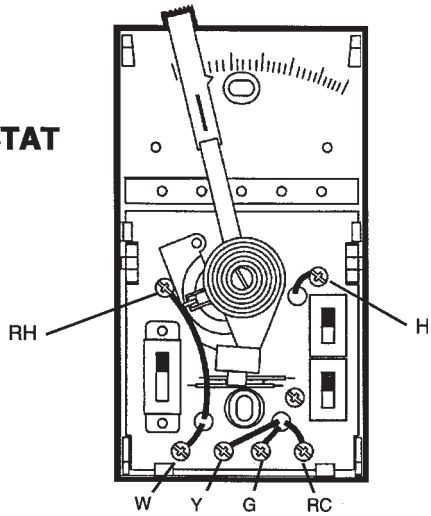


There are four low voltage wires in the electric box of the air conditioner. They are black, yellow, blue and orange. The black wire goes to negative (-) DC volt power source. The yellow goes to thermostat **Y** terminal. The blue goes to thermostat **H** terminal and the orange goes to thermostat **G** terminal. The DC volt positive (+) from the power source goes to thermostat **RC** terminal. If a furnace is wired to the heat-cool thermostat, one furnace thermostat wire goes to terminal **RH** on the thermostat. The other furnace thermostat wire goes to terminal **W** on the thermostat.

| | T'stat Terminal | Unit Wire Color | Power Source |
|---|---|---|---|
| AC | RC<br>— — | — —<br>Black | +12V DC<br>-12V DC |
| HEAT | Y, H, G<br>RH & W | Yellow<br>Blue<br>Orange<br>(Furnace Option) | ↑<br>Field Supply Wires |

To check the thermostat remove all wires. Next, using an ohm meter, with the SYSTEM switch in the COOL position and the FAN switches in AUTO and HI and the room temperature above the setpoint temperature, continuity should exist between RC to G, RC to Y and RC to H. No continuity should exist between RH to W. With room temperature below setpoint temperature, no continuity would exist between RC to G, RC to Y and RC to H, and RH to W. With FAN switches in AUTO and LOW, and room temperature above setpoint temperature, continuity should exist between **RC** to **G** and **RC** to **Y**. No continuity should exist between **RC** to **H** and **RH** to **W**. With the FAN switches in ON and LOW and the room temperature above the setpoint temperature, continuity should exist between **RC** to **G** and **RC** to **Y**. No continuity should exist between **RC** to **H** and **RH** to **W**.

With the room temperature below the setpoint temperature, continuity should exist between **RC** to **G**. No continuity should exist between **RC** to **Y, RC** to **H** and **RH** to **W**. With the FAN switches in ON and HI and the room temperature above the setpoint temperature, continuity should exist between **RC** to **G** and **RC** to **Y** and **RC** to **H**. There should be no continuity between **RH** and **W**. With room temperature below setpoint temperature, continuity should exist between **RC** to **G** and **RC** to **H;** and no continuity should exist between **RC** to **Y** and **RH** to **W**.

With the SYSTEM switch to OFF and FAN switches to AUTO and HI or LOW and room temperature **above or below** setpoint temperature, no continuity should exist between **RC** to **G, RC** to **Y, RC** to **H** and **RH** to **W**. With FAN switches to ON and LOW and room temperature above or below setpoint temperature, continuity should exist between **RC** to **G** and no continuity between **RC** to **Y, RC** to **H** and **RH** to **W**. With FAN switches to ON and HI and room temperature above or below setpoint temperature. Continuity should exist between **RC** to **G** and **RC** to **H** and **RH** to **W**. With FAN switches to ON and HI and room temperature above or below setpoint temperature. Continuity should exist between **RC** and **G** and **RC** to **H** and no continuity between **RC** to **Y** and **RH** to **W**.

With the SYSTEM switch HEAT position, FAN switches to AUTO and HI or LOW positions, and room temperature above setpoint temperature. No continuity would exist between **RC** to **G, RC** to **Y, RC** to **H** and **RH** to **W.** With room temperature below setpoint temperature continuity would exist between **RC** to **G, RC** to **Y** and **RC** to **H**. With FAN switches to ON and LOW and room temperature above setpoint temperature, continuity would exist between **RC** to **Y, RC** to **H**, and **RH** to **W**. With room temperature below setpoint temperature, continuity should exist between **RC** to **G** and **RH** to **W**. No continuity would exist between **RC** to **Y** and **RC** to **H**. With FAN switches to ON and HI and room temperature above setpoint temperature, continuity should exist between **RC** to **G** and **RC** to **H** and no continuity between **RC** to **Y** and **RH** to **W**. With room temperature below setpoint temperature, continuity should exist between **RC** to **G**, **RC** to **H** and **RH** to **W**. No continuity would exist between **RC** to **Y**.

To check ACTIVE (ON) terminals, place on lead from ohm meter to **RC** or **RH** terminal and the other lead from the meter to the ACTIVE terminal.

With room temperature BELOW setpoint temperature, you should NOT have continuity between red wire to violet, white, black, yellow or blue wires.

With System Switch in COOL, Fan Switch in LOW AUTO and room temperature ABOVE setpoint temperature, you should have continuity between red wire (Pin 2) to black wire (Pin 4) and yellow wire (Pin 5). You should NOT have continuity between red wire to violet, white or blue wires. With room temperature BELOW setpoint temperatures, you should NOT have continuity between red wire to violet, white, black, yellow or blue wires.

| SWITCH COMBINATION | | IF ROOM TEMP. IS ABOVE/BELOW SETPOINT TEMP. | TERMINALS THAT ARE "ON" | | | |
|---|---|---|---|---|---|---|
| SYSTEM SWITCH | FAN SWITCH | | G | Y | H | W |
| COOL | HI AUTO | ABOVE | X | X | X | |
| | | BELOW | | | | |
| | LO AUTO | ABOVE | X | X | | |
| | | BELOW | | | | |
| | LO ON | ABOVE | X | X | | |
| | | BELOW | X | | | |
| | HI ON | ABOVE | X | X | X | |
| | | BELOW | X | | X | |
| OFF | HI AUTO | ABOVE | X | X | | |
| | | BELOW | | | | |
| | LO AUTO | ABOVE | | | | |
| | | BELOW | | | | |
| | LO ON | ABOVE | X | | | |
| | | BELOW | X | | | |
| | HI ON | ABOVE | X | | X | |
| | | BELOW | X | | X | |
| HEAT | HI AUTO | ABOVE | | | | |
| | | BELOW | | | | X |
| | LO AUTO | ABOVE | | | | |
| | | BELOW | | | | X |
| | LO ON | ABOVE | X | | | |
| | | BELOW | X | | | X |
| | HI ON | ABOVE | X | | X | |
| | | BELOW | X | | X | X |

With system switch in COOL, Fan Switch in LOW ON and room temperature ABOVE setpoint temperature you should have continuity between red wire (Pin 2) to black wire (Pin 4) and yellow wire (Pin 5). You should NOT have continuity between red wire to violet, white or blue wires. With room temperature BELOW setpoint temperature, you should have continuity between red wire (Pin 2) to black wire (Pin 4). You should NOT have continuity between red wire to violet, white, yellow or blue wires.

With System Switch in COOL, Fan Switch in HI ON and room temperature ABOVE setpoint temperature you should have continuity between red wire (Pin 2) to black wire (Pin 4), yellow wire (Pin 5) and blue wire (Pin 6). You should NOT have continuity between red wire to violet or white wires. With room temperature BELOW setpoint temperature, you should have continuity between red wire (Pin 2) to black wire (Pin 4) and blue wire (Pin 6). You should NOT have continuity between red wire to violet, white or yellow wires.

With System Switch in OFF, Fan Switch in HI AUTO or LOW AUTO and room temperature ABOVE or BELOW setpoint temperature, you should NOT have continuity between red wire to violet, white, black, yellow or blue wires.

With System Switch in OFF, Fan Switch in LOW ON and room temperature ABOVE or BELOW setpoint temperature, you should have continuity between red wire (Pin 2) to black wire (Pin 4). You should NOT have continuity between red wire to violet, white, yellow or blue wires.

With System Switch in OFF, Fan Switch in HI ON and room temperature ABOVE or BELOW setpoint temperature, you should have continuity between red wire (Pin 2) to black wire (Pin 4) and blue wire (Pin 6). You should NOT have continuity between red wire to violet, white or yellow wires.

With System Switch in HEAT PUMP, Fan Switch in HI AUTO and room temperature ABOVE setpoint temperature, you should NOT have continuity between red wire to violet, white, black, yellow or blue wires. With room temperature BELOW setpoint temperature, you should have continuity between red wire (Pin 2) to white wire (Pin 3), black wire (Pin 4), and blue wire (Pin 6). You should NOT have continuity between red wire to violet or yellow wires.

With System Switch in HEAT PUMP, Fan Switch in LOW AUTO and room temperature ABOVE setpoint temperature, you should NOT have continuity between red wire to violet, white, black, yellow or blue wires. With room temperature BELOW setpoint temperature, you should have continuity between red wire (Pin 2) to white wire (Pin 3) and black wire (Pin 4). You should NOT have continuity between red wire to violet, yellow or blue wires.

With System Switch in HEAT PUMP, Fan Switch in LOW ON and room temperature ABOVE setpoint temperature, you should have continuity between red wire (Pin 2) to black wire (Pin 4). With room temperature BELOW setpoint temperature, you should have continuity between red wire (Pin 2) to white wire (Pin 3) and black wire (Pin 4). You should NOT have continuity from red wire to violet, yellow or blue wires.

With System Switch in HEAT PUMP, Fan Switch in HI ON and room temperature ABOVE setpoint temperature, you should have continuity between red wire (Pin 2) to black wire (Pin 4) and blue wire (Pin 6). You should NOT have continuity between red wire to violet, white or yellow wires. With room temperature BELOW setpoint temperature, you should have continuity between red wire (Pin 2) to white wire (Pin 3), black wire (Pin 4) and blue wire (Pin 6). You should NOT have continuity between red wire to violet or yellow wires.

With System Switch in AUX HEAT, Fan Switch in HI AUTO and room temperature ABOVE setpoint temperature, you should NOT have continuity between red wire to violet, white, black, yellow or blue wires. With room temperature BELOW setpoint temperature, you should have continuity between violet wire (Pin 1) and green wire. You should NOT have continuity between red wire to violet, white, black, yellow or blue wires.

## C18c. Analog Thermostat

There are 3 different Analog thermostats being used to control Duo-Therm Air Conditioners, Air Conditioners with Heat Strips, and Heat Pumps. The type of Thermostat used depends on the unit and accessories used with it.

It is very important for the proper location of the Analog Thermostat to ensure that it will provide a comfortable RV temperature (See Section A7. Thermostat Location). Observe the following rules when selecting a location:

1. Locate the Analog Thermostat 54" above the floor.
2. Install the Analog Thermostat on a partition, not on an outside wall.
3. Never expose it to direct heat from lamps, sun or other heat producing items.
4. Avoid locations close to doors that lead outside, windows or adjoining outside walls.
5. Avoid locations close to discharge registers.

The Analog Thermostat is mounted on the wall of the RV and is connected to the Analog Control Box with 6 or 7 wires depending on the Unit and accessories being used.

**Current Model Color Coding**

1. Connect the previously run +12V DC to the red wire labeled +12V protruding from the relay kit.
2. Connect the previously run -12V DC to the black wire labeled -12V protruding from the relay kit.
3. Connect the red/white wire to the thermostat +7.5.
4. Connect the unit green wire to the thermostat GND terminal.
5. Connect the unit yellow wire to the thermostat COOL terminal.
6. Connect the unit tan wire to the thermostat FAN terminal.
7. Connect the unit blue wire to the thermostat HI FAN.
8. Connect the unit orange wire to the thermostat HS/HP terminal (if applicable).
9. Connect the unit white wire to the thermostat FUR terminal (if applicable).
10. Connect the unit blue/white wires to the two furnace control wires (if applicable).

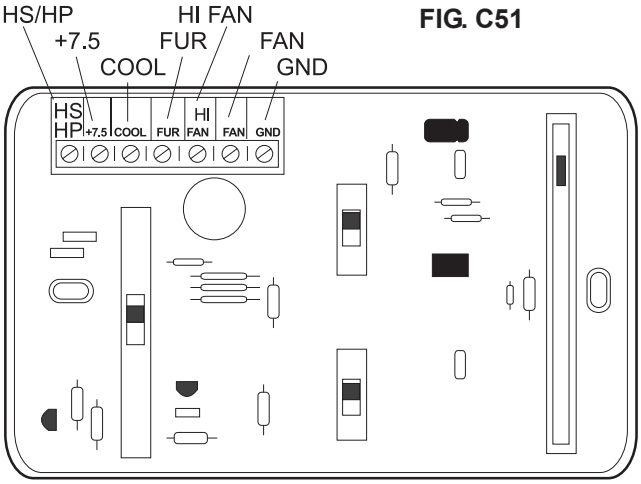


FIG. C51

**Early Model Color Coding**

1. Connect the previously run +12V DC to the red wire labeled +12V protruding from the relay kit. Connect the previously run -12V DC to the black wire labeled -12V protruding from the relay kit.
2. Connect the other relay kit red wire labeled +12V to Tstat +12 Screw.
3. Connect the other relay kit black wire (unmarked) to the thermostat GND terminal.
4. Connect the relay kit yellow wire to the thermostat cool terminal.
5. Connect the relay kit orange wire to the thermostat fan terminal.
6. Connect the relay kit blue wire to the thermostat Hi Fan.
7. Connect the relay kit violet wire to the thermostat HS/HP (if applicable).
8. Connect the relay kit white wire to the thermostat furnace terminal (if applicable).
9. Connect the relay kit blue wires with white strip to the two furnace control wires (if applicable).

If nothing operates on the unit, turn the **System Switch (3)** to "OFF", **FAN Auto/On Switch (2)** to "AUTO", and **FAN HIGH/LOW Switch (1)** to "LO". Remove the Analog Thermostat cover and verify the following voltage readings:

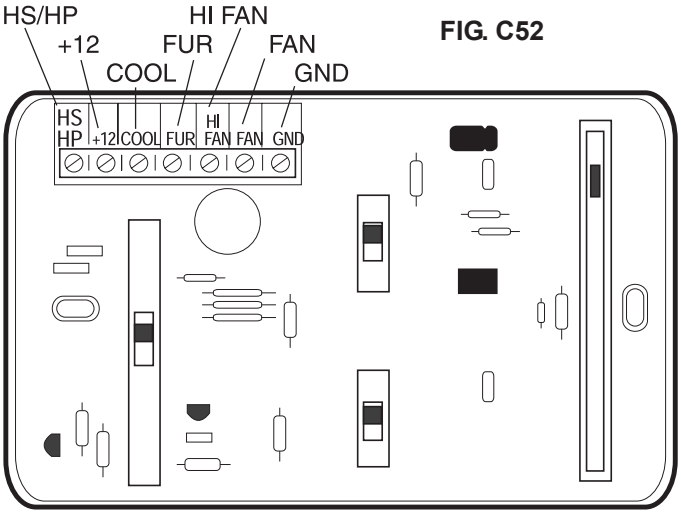


**FIG. C52**

**Current Model Terminal Identification**

Check for voltage between and **GND** terminal and:

1. **FAN** terminal for voltage ranging from 8.38 to 17.31 VDC.
2. **HI FAN** terminal for voltage ranging from 8.38 to 17.31 VDC.
3. **FUR** terminal for voltage ranging from 8.38 to 17.31 VDC.
4. **COOL** terminal for voltage ranging from 6.73 to 7.53 VDC.
5. **+7.5** terminal for voltage ranging from 6.74 to 7.5 VDC.
6. **HS/HP** terminal (present only on heat strip or heat pump models) for voltage ranging from 8.38 to 17.31 VDC.

**Early Model Terminal Identification**

Check for voltage between the **GND** terminal and:

1. **FAN** terminal for voltage ranging from 8.38 to 17.31 VDC.
2. **HI FAN** terminal for voltage ranging from 8.38 to 17.31 VDC.
3. **FUR** terminal for voltage ranging from 8.38 to 17.31 VDC.
4. **COOL** terminal for voltage ranging from 6.73 to 7.53 VDC.
5. **+12** terminal for voltage ranging from 6.74 to 7.5 VDC.
6. **HS/HP** terminal (present only on heat strip or heat pump models) for voltage ranging from 8.38 to 17.31 VDC.

If the voltages shown above are present, use a jumper wire to test unit operation as follows:

**LOW FAN**, jumper wire between GND and FAN. The unit should operate on Low fan speed.

**HIGH FAN**, jumper wire between GND, FAN and HI FAN. The unit should operate on high fan speed.

**FURNACE**, (if furnace connected to the blue/white wires on the Analog Control Box) jumper wire between GND and FUR. The furnace should operate.

**LOW COOL**, jumper wire between GND, FAN and COOL. The compressor should operate and low fan speed.

**HIGH COOL**, jumper wire between GND, FAN, HI FAN, and FAN. The compressor should operate and high fan speed.

**HEAT STRIP**, (if unit is so equipped) jumper between GND, FAN, and HS/HP. The heat strip should operate and the fan on low speed.

**HEAT PUMP**, (if unit is so equipped) jumper between GND, FAN, HS/HP. The heat pump should operate on the low fan speed.

If the above tests prove the unit to operate properly, the Analog Thermostat is defective and requires replacement. If the unit fails to operate properly when jumpered, check the cable (See C19) and Analog Control Board (See C17b).

## C18d. Comfort Control Center™

The Comfort Control Center is the component that makes all decisions for operation depending on the system and the accessories connected to it.

**Note:** The PAL tester with the air conditioner Comfort Control Center Data Capture Module attached will test the integrity and circuitry of the Comfort Control Center.

If the system is to be used **WITHOUT** a **Remote Temperature Sensor,** the proper location of the Comfort Control Center is very important to ensure that it will provide a comfortable RV temperature. Observe the following rules when selecting a location:

1. Locate the Comfort Control Center 54" above the floor.
2. Install the Comfort Control Center on a partition, no on an outside wall.
3. **NEVER** expose it to direct heat from lamps, sun or other heat producing items.
4. Avoid locations close to doors that lead outside, windows or adjoining outside walls.
5. Avoid locations close to supply registers and the air from them. See Section A7 on page 12.

If the system is to be used **WITH** a **Remote Temperature Sensor** in **ALL** zones, the Comfort Control Center may be mounted anywhere that is convenient in the coach. Try to avoid hard to see areas. See C11 - Remote Sensor and A7 Thermostat Locations.

To check the Comfort Control Center, first verify the DC power is being supplied and the polarity is correct. This can be done by plugging the Comfort Control Center communication cable into a standard telephone (RJ-11 type) jack. Use a VOM meter and read DC volts between red (+) and black (-). See FIG. C53. If DC power is not present or reversed polarity, check the communication cable. See Section C19 on page 52. If DC power is present at the RJ11 plug on the Comfort Control Center, the next step is to do a reset procedure. See Section B1d on page 16. If the Comfort Control Center still does not illuminate or the display does not read, replace the Comfort Control Center. If the correct system information does not show, check configuration - Section D on page 60 before control is replaced.

FIG. C53

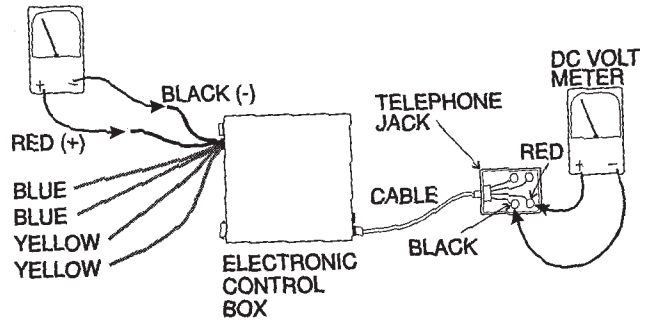


# C19. Cable Assembly

The ten (10) wire cable is used with remote wall mounted thermostats. It connects the wall mounted thermostat (bimetal and electronic thermostat assemblies) to the relay board.

The cable assembly is available in 15, 25 and 30 foot lengths. This cable assembly has a male connector on one end (thermostat connection) and a female connector on the other end (unit control box).

The cable assembly has 10 wires. The arrow on each connector designates Pin 1.

To check the cable assembly, disconnect each end of the cable assembly and check for continuity on each wire in the assembly.

Also, check each connector for bent pins or loose wires. Each wire has a receptacle that snaps into the connector.

FIG. C54

Ten (10) Wire Cable Assembly

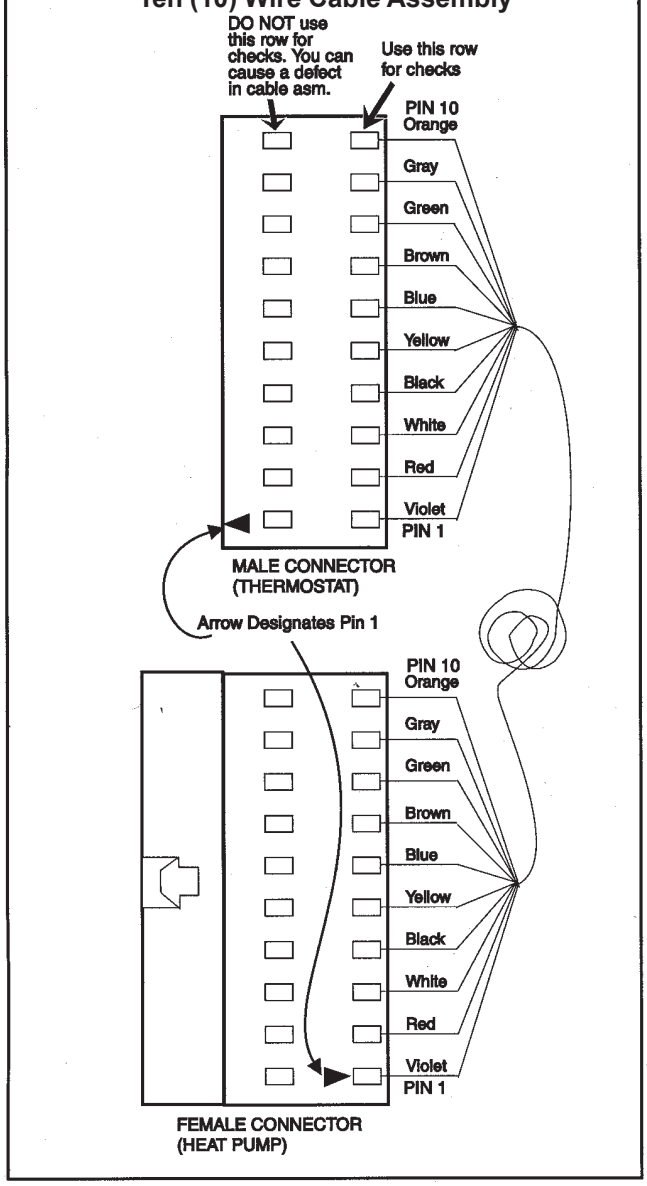

**Two through Eight Wire Cables**
The Bi-Metal, Analog and Comfort Control Center controls require a 18 to 22 AWG cable for DC power and control of various components. The cable can be two through eight wires. This is supplied by the installer at the time of the original installation.

If a problem is suspected in the cable, it should be checked with an ohmmeter. Both ends of the cable must be disconnected from the control box and thermostat. Check continuity between all wires. If a continuity reading is present the cable has a short (staple in cable) and it will require repair.

Check each individual wire from each end of the cable for continuity. No continuity shows the wire is open and needs to be repaired or replaced.

**Communication Type Cable**
A flat communication type extension cable must be routed from the unit to the Comfort Control Center. It must be 26 gauge, stranded copper wire, four (4) conductor (yellow, green, red and black). The cable must be terminated with a four (4) position (telephone) RJ-11 connector.

**Note:** Do Not use a pre-made telephone extension cable. The polarity of the connectors is reversed and will cause a failure of the system.

FIG. C55

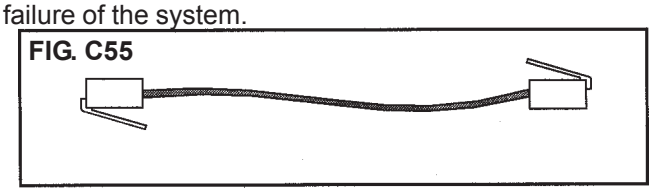

The Cable assembly should be made in the following manner: Cut the modular cable to the desired length. When cutting, make sure ends are cut straight, not diagonally. Next, use an RJ11 connector crimping tool.

Use the stripper section of the tool's blade to remove the outer insulation from each end of the cable. Be careful not to remove or break the colored insulation on the inner conductors.

**Note:** Fully insert the cable into the stripper slot, holding cable in one hand and tool in the other hand. Squeeze down on tool and pull away. This will remove the correct amount of outer insulation for insertion into RJ-11 modular plug.

Now you are ready to insert the prepared cable into the RJ-11 modular plug. When inserting cable into plug, you **MUST** be sure that the black wire is on your left as you look at the top of the plug (with the spring clip facing you) and that the conductors are flush with the tip of the plug and touching the small teeth-like gold conductors. Insert the RJ-11 modular plug with the cable into the tool's cavity, squeeze down to the STOP and hold for a few seconds. This completes connections for one end of the cable. To prepare the other end of the cable, repeat this procedure.

**Note:** Be sure polarity is the same on each plug. Example: Black on left (viewing plug from top, spring clip side).

FIG. C56

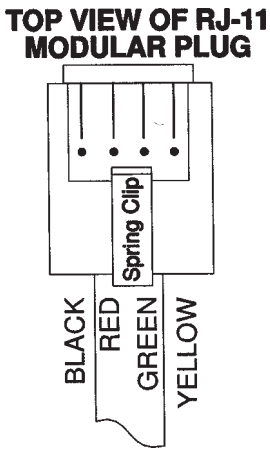


**Model 39224.601 (Air Conditioner)**
The cable assembly is a five-wire assembly. The thermostat end has a five-pin flat connector:

Pin 1 = Yellow Wire
Pin 2 = White Wire
Pin 3 = Orange Wire
Pin 4 = Blue Wire
Pin 5 = Black Wire

The unit end has a six-pin square connector.

Pin 1 = Yellow Wire
Pin 2 = White Wire
Pin 3 = Orange Wire
Pin 4 = Blue Wire
Pin 5 = Black Wire

To check the cable assembly, first unplug each end of the cable assembly. Next, check for continuity on each wire such as Pin 1 to Pin 1, etc. Continuity should be present from Pin 1 to Pin 1, etc.

Next, check for continuity from one wire to each of the other wires, such as Pin 1 to Pin 2; the Pin 1 to Pin 3, etc. No continuity should be present from one wire to any other wire in the assembly. Be sure to check each wire.

FIG. C57

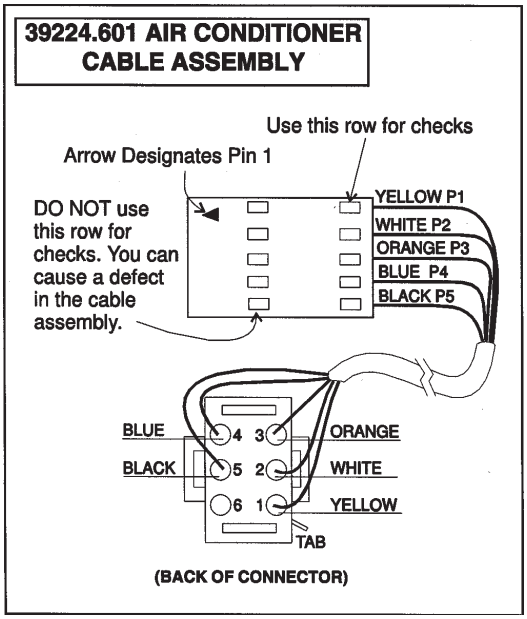

**Model 39424.601 (Heat Pump)**
The cable assembly is a ten-wire cable with seven of the ten wires used. The thermostat end has a 10-pin flat connector with seven positions used.

Pin 1 = Violet Wire
Pin 2 = Red Wire
Pin 3 = White Wire
Pin 4 = Black Wire
Pin 5 = Yellow Wire
Pin 6 = Blue Wire
Pin 7 = Brown Wire

The unit end has a 9-pin square connector with seven positions used.

Pin 1 = Violet Wire
Pin 2 = Red Wire
Pin 3 = White Wire
Pin 4 = Black Wire
Pin 5 = Yellow Wire
Pin 6 = Blue Wire
Pin 7 = Brown Wire

To check the cable assembly, first unplug each end of the cable assembly. Next, check for continuity on each wire, such as Pin 1 to Pin 1, then Pin 2 to Pin 2, etc. Continuity should be present from Pin to Pin 1, then Pin 2 to Pin 2, etc.

Next, check for continuity from one wire to each of the other wires, such as Pin 1 to Pin 2, then Pin 1 to Pin 3, etc. NO continuity should be present from one wire to any other wire in the assembly. Be sure to check each wire.

FIG. C58

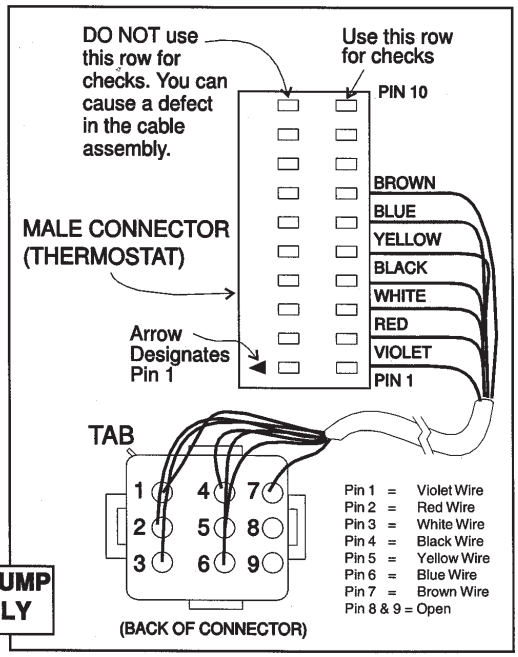


**39424.601 HEAT PUMP CABLE ASSEMBLY**

**Model 39325.XXX and 39335.XXX (Heat Pumps)**
The cable assembly is a ten wire cable with seven of the ten wires used. The thermostat end has a 10-pin flat connector with seven positions used.

Pin 1 = Violet Wire
Pin 2 = Red Wire
Pin 3 = White Wire
Pin 4 = Black Wire
Pin 5 = Yellow Wire
Pin 6 = Blue Wire
Pin 7 = Brown Wire

The unit end has the above seven wires stripped and needs to be wired to the corresponding color of wire in the electric box of the unit. To check the cable assembly, first unplug the thermostat end and disconnect each wire at the unit. Next, check for continuity on each wire such as violet to violet, red to red, etc. Continuity should be present from violet to violet, red to red, etc.

Next, check for continuity from one wire to each of the other wires. NO continuity should be present from one wire to any other wire in the assembly.

FIG. C59

**393XX.XXX HEAT PUMP CABLE ASSEMBLY**

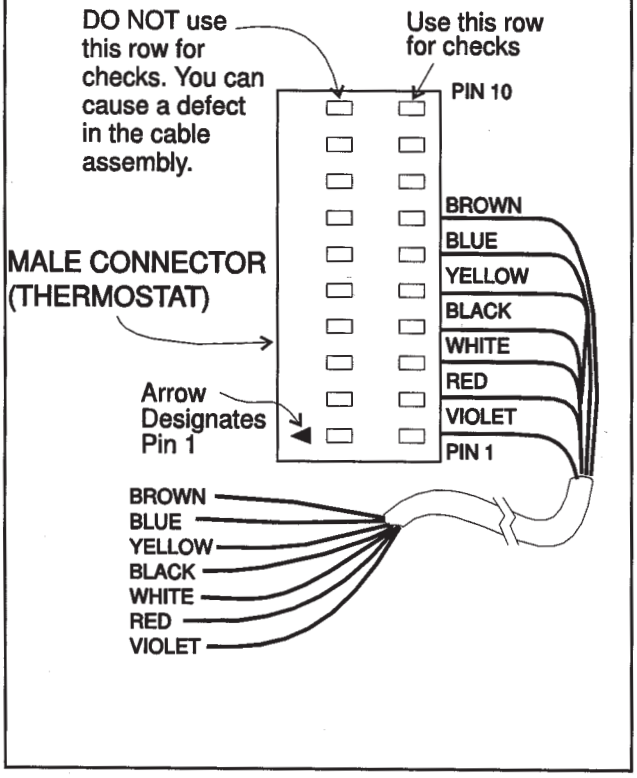

# C20. Sealed System

## C20a. Filter Drier & Capillary Tube

One mechanical problem you may encounter is refrigerant flow restriction. There are two types of restrictions, high side and low side. See Section C20c.

**High side restriction will cause higher than normal amp draw, drastically higher than normal high side pressures, and slightly higher than normal low side pressures.**

**Low side restriction will cause lower than normal amp draw, drastically lower than normal low side pressures and slightly lower than normal high side pressures.**

**A restriction that would not follow these basic conditions is a liquid line restriction, which is in the high side of the air conditioner. It will give the same results as a low side restriction.**

The most common restriction is the capillary tube or tubes, and/or at the filter drier. If there is a restriction in the liquid line, there will be a temperature drop from one side of the restriction to the other side.

In the case of a capillary tube restriction, one tube would be normal,( warm to the touch) and the restricted tube would be cool or cold to the touch, and could even sweat if operated long enough.

A restriction in he filter-drier would cause a temperature drop at the point of the restriction. A buildup of frost or sweat could be evident if operated long enough.

Refrigerant leaks can occur from an improper weld, a broken line or other damage. Compressor oil will often be noticeable at the location of major leaks.

Replace any parts that are found to be bad. Whenever a component is replaced in the sealed system, or the system has been opened to the atmosphere, a new filter-drier and evacuation is required. If the unit was manufactured without a filter-drier, one should not be added. Evacuate the refrigerant system until it is dry (500 microns or less reading on a vacuum thermistor gauge.)

## C20b. Recharging

**Note:** The **Clean Air Act of 1990** set guidelines in regard to recapturing or disposition of refrigerants. Check with local authorities for proper handling or evacuation of refrigerants.

The equipment items needed to properly evacuate and recharge a sealed system are: a piercing type clamp-on saddle valve; a braze -on processing valve; a core removal tool; a process tube fitting; a set of compound gauges; a vacuum pump; equipment to weigh a precise amount of refrigerant; R-22 refrigerant; gas welding equipment; a R-22 refrigerant leak detector and recapturing or recycling equipment. **If you have not been properly trained in sealed system repairs, do not attempt this procedure.**

**Note:** This is not a thorough sealed system repair training program. For additional information or training, you may want to attend a basic air conditioning course at your local college.

To drain the R-22 refrigerant, attach a clamp-on saddle valve on the low side process tube. If the air conditioner does not have a low side process tube, attach a saddle valve at the point where you will add a process tube.

Slowly drain the R-22 refrigerant by using recapturing or recycling equipment. Do not leave the clamp-on saddle valve on the unit as it will cause leaks.

If you are going to use the braze-on processing valve, once the refrigerant has been drained, use a tubing cutter and cut the tube near the end. Do this on both the low and high side processing tubes.

**FIG. C60**

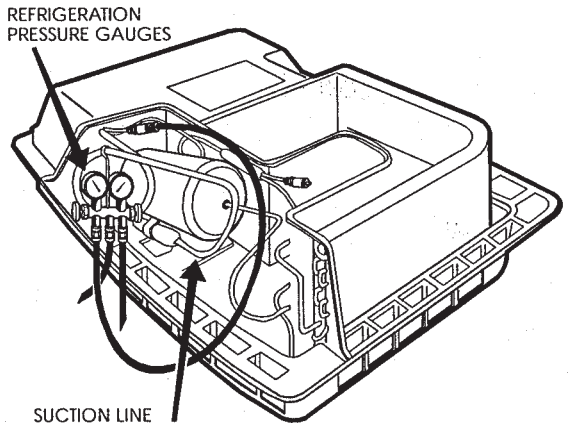

Next, weld the process tube in place. We recommend a brazing material which melts between 950° and 1450° Fahrenheit, and contains a minimum of 2% silver and 5% to 10% phosphorous. This type of brazing material does not require the use of a flux to join copper to copper. If you are using the weld on the process valve, be sure the valve core is removed before any heat is applied.

FIG. C61

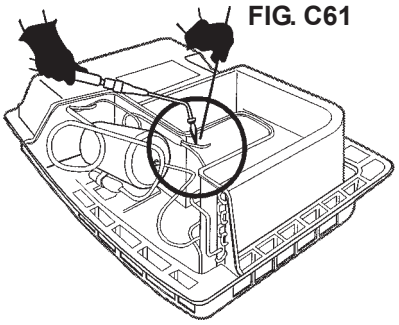

Connect the blue colored low pressure line of the compound gauges to the charging port on the low side pressure tubing. Next, connect the red colored high pressure line of the compound gauges to the charging port on the high side pressure tubing.

Next, connect the yellow colored line of the compound gauges to the charging cylinder and add 2 or more ounces of R-22 refrigerant to the sealed system and check all weld joints for leaks. Allow the refrigerant to stay in the system for at least 10 minutes. If a leak is detected, drain the system and repair the leak before you proceed.

When you are certain the system is sealed, drain any refrigerant from the system and connect the yellow common line of the compound gauges to the vacuum pump.

Open the pressure relief valve on the vacuum pump. This allows the major contaminants from the sealed system to escape into the atmosphere rather than enter the oil in the vacuum pump.

Both the low and high side valves on the compound gauge set should be opened and vacuum pump turned on.

After five minutes, close the pressure relief valve on the vacuum pump. Check the blue gauge after running the vacuum pump for 10 minutes. A vacuum reading of zero to 10 inches would indicate a leak in the system or the hose connections.

FIG. C62

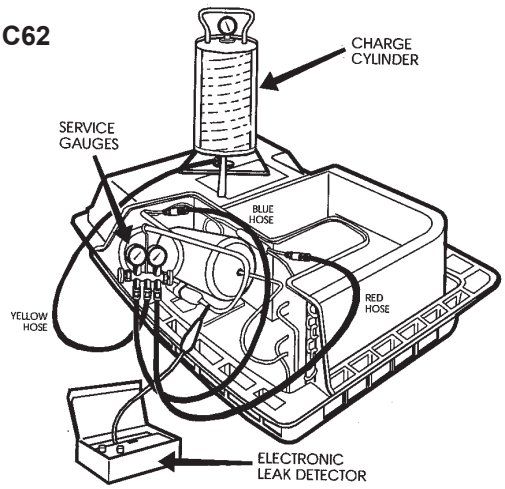


FIG. C63

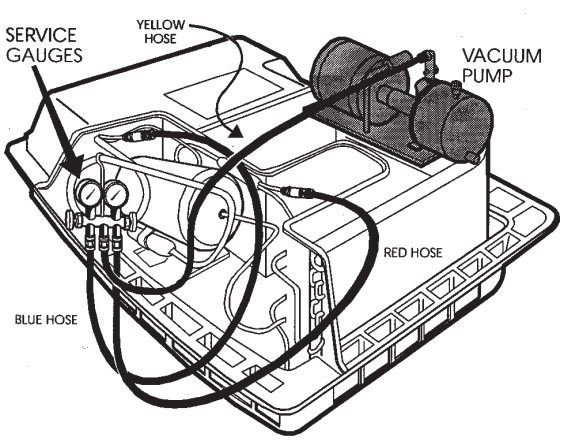


Check all hose connections for tightness. If the low side gauge does no change, there is a leak in the sealed system. Locate the leak and correct it before proceeding.

If the blue low side gauge is well below 10 inches of vacuum, continue the evacuation for at least 40 to 45 minutes or until **you have a dry system (500 microns or less on a vacuum thermistor gauge).**

At this time there should be a good, deep evacuation, or dry atmosphere inside the sealed system. Close both the low and high side valves on the compound gauge set and turn off the vacuum pump.

Disconnect the yellow colored hose at the vacuum pump and connect it to the bottom port or connection on the charging cylinder. Open the valve on the cylinder.

For the correct amount of R-22 refrigerant charge, check the data plate of the air conditioner you are working on. To compensate for the red liquid line, on the gauge set (approx. 30-36 inches long), add one ounce to the data plate mount. You are now ready to do a weighted charge.

The air conditioner charge is critical and must be exact for proper cooling.

Allow the refrigerant charge to equalize by waiting 10 minutes before starting the system. After 10 minutes, do a cooling performance test to determine whether the problem was in the amount of charge or within the components of the system.

FIG. C64

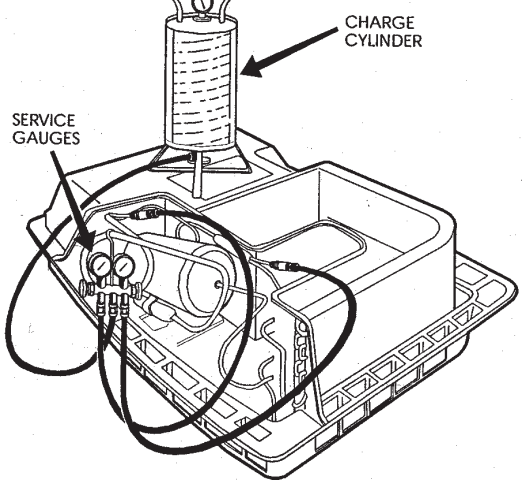

Now the blue low side and the red high side lines should be disconnected. Make sure that the air conditioner connection is sealed before removing the lines. The process tube can be pinched off in two places; the charging port cut off, and the end of the tube brazed for a hermetically sealed system.

## C20c. Refrigerant Vapor Pressure/ Temperature Chart

The system operating pressures will vary with humidity and temperature of the outdoor and indoor conditions. With use of the **Refrigerant Vapor Pressure Chart** normal operating pressures can be calculated.

1. Use an accurate thermometer and measure the inlet air temperature to the condenser (hot) coil.
2. Add 32°F to the above thermometer reading.
3. Find the temperature that matches the total of Steps 1 and 2 on the **Refrigerant Vapor Pressure Chart.** The pressure reading beside the temperature reading will equal the high side pressure.
4. The low side pressure would be the high side pressure divided by 4.

Example: Outdoor Temp. (85°F) + 32°F = High side liquid temp. (117°F).

Convert temp. to pressure: 117°F = 249.5 PSIG (±7 PSIG) R22 High side liquid pressure.

1/4 of High side liquid pressure (249.5 PSIG) = Low side vapor pressure (62.75 PSIG ±3 PSIG).

See Chart below.

### REFRIGERANT VAPOR PRESSURES (PSIG)

| Temp. Deg. F. | Pressure PSIG R-22 | Temp. Deg. F. | Pressure PSIG R-22 | Temp. Deg. F. | Pressure PSIG R-22 | Temp. Deg. F. | Pressure PSIG R-22 |
|---|---|---|---|---|---|---|---|
| 20 | 43.0 | 57 | 96.1 | 94 | 179.1 | 131 | 300.7 |
| 21 | 44.1 | 58 | 97.9 | 95 | 181.8 | 132 | 304.6 |
| 22 | 45.3 | 59 | 99.8 | 96 | 184.6 | 133 | 308.6 |
| 23 | 46.4 | 60 | 101.6 | 97 | 187.4 | 134 | 312.6 |
| 24 | 47.6 | 61 | 103.5 | 98 | 190.2 | 135 | 316.6 |
| 25 | 48.8 | 62 | 105.4 | 99 | 193.0 | 136 | 320.7 |
| 26 | 50.0 | 63 | 107.3 | 100 | 195.9 | 137 | 324.8 |
| 27 | 51.2 | 64 | 109.3 | 101 | 198.8 | 138 | 328.9 |
| 28 | 52.4 | 65 | 111.2 | 102 | 201.8 | 139 | 333.1 |
| 29 | 53.6 | 66 | 113.2 | 103 | 204.7 | 140 | 337.3 |
| 30 | 54.9 | 67 | 115.2 | 104 | 207.7 | 141 | 341.5 |
| 31 | 56.2 | 68 | 117.3 | 105 | 210.3 | 142 | 345.8 |
| 32 | 57.5 | 69 | 119.4 | 106 | 213.8 | 143 | 350.1 |
| 33 | 58.8 | 70 | 121.4 | 107 | 216.9 | 144 | 354.5 |
| 34 | 60.1 | 71 | 122.5 | 108 | 220.0 | 145 | 358.9 |
| 35 | 61.5 | 72 | 125.7 | 109 | 223.2 | 146 | 363.4 |
| 36 | 62.8 | 73 | 127.8 | 110 | 226.4 | 147 | 367.8 |
| 37 | 64.2 | 74 | 130.0 | 111 | 229.6 | 148 | 372.4 |
| 38 | 65.6 | 75 | 132.2 | 112 | 232.8 | 149 | 376.9 |
| 39 | 67.1 | 76 | 134.5 | 113 | 236.1 | 150 | 381.5 |
| 40 | 68.5 | 77 | 136.7 | 114 | 239.4 | 151 | 386.2 |
| 41 | 70.0 | 78 | 139.0 | 115 | 242.7 | 152 | 390.9 |
| 42 | 71.5 | 79 | 141.3 | 116 | 246.1 | 153 | 395.6 |
| 43 | 73.0 | 80 | 143.6 | 117 | 249.5 | 154 | 400.4 |
| 44 | 74.5 | 81 | 146.0 | 118 | 253.0 | 155 | 405.2 |
| 45 | 76.0 | 82 | 148.4 | 119 | 256.4 | 156 | 410.0 |
| 46 | 77.6 | 83 | 150.8 | 120 | 259.9 | 157 | 414.9 |
| 47 | 79.2 | 84 | 153.2 | 121 | 263.5 | 158 | 419.9 |
| 48 | 80.0 | 85 | 155.7 | 122 | 267.0 | 159 | 424.8 |
| 49 | 82.4 | 86 | 158.2 | 123 | 270.6 | 160 | 429.9 |
| 50 | 84.0 | 87 | 160.7 | 124 | 274.3 | 161 | 434.9 |
| 51 | 85.7 | 88 | 163.2 | 125 | 278.0 | 162 | 440.1 |
| 52 | 87.4 | 89 | 165.8 | 126 | 281.7 | 163 | 445.2 |
| 53 | 89.1 | 90 | 168.4 | 127 | 285.4 | 164 | 450.4 |
| 54 | 90.8 | 91 | 171.0 | 128 | 289.2 | 165 | 455.7 |
| 55 | 92.6 | 92 | 173.7 | 129 | 293.0 | | |
| 56 | 94.3 | 93 | 176.4 | 130 | 296.8 | | |

# 21. Wiring

**Note: Be sure to use the wiring diagram on the appliance for the specific unit you are diagnosing.**

On rooftop units there is a 6-pin connector. Verify that all wires are tight in this connector and to all components.

**FIG. C65**

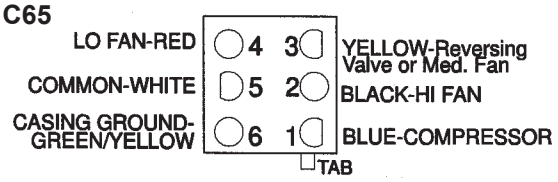


On some basement units there are two 9-pin connectors. Verify all wires are tight in each connector and to all components.

TERM 1 - Compressor (C)
TERM 2 - Compressor (R)
TERM 3 - Compressor (S)
TERM 4 - Common (motor)
TERM 6 - Hi Fan (motor)
TERM 7 - Lo Fan (motor)
TERM 8 - Reversing Valve
TERM 9 - Reversing Valve

**FIG. C66**

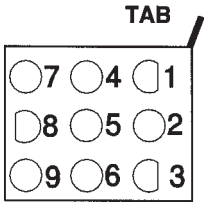


TERM 5 - Capacitor (motor)

| **Circuit 1** | **Circuit 2** |
|---|---|
| 1 - Black | 1 - Orange |
| 2 - White | 2 - Gray |
| 3 - Red | 3 - Brown |
| 4 - White | 4 - White |
| 5 - Brown | 5 - Brown |
| 6 - Black | 6 - Black |
| 7 - Red | 7 - Red |
| 8 - Violet | 8 - Open |
| 9 - Violet | 9 - Open |

**Example: Typical Wiring Diagrams for Roof Top Air Conditioner**

**FIG. C67**

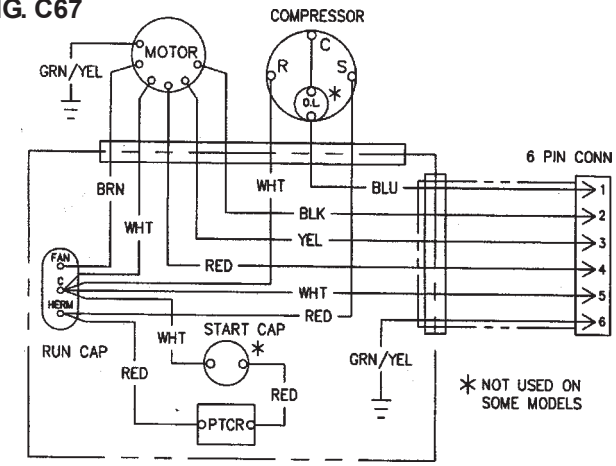


**Example: Typical Wiring Diagram for Roof Top Heat Pump**

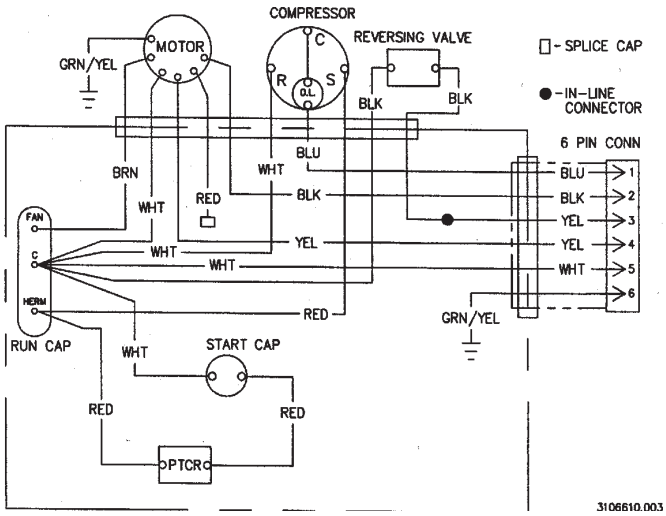

# C22. Other

## C22a. Ambient Temperature

Running the air conditioner or heat pump at a temperature below 75 degrees Fahrenheit may cause the inside coil (evaporator) to freeze up in the cooling mode. The most common time for this to occur is at night. Even after the ambient temperature has gone up, the coils will remain frozen. To assist the defrosting of the coil, turn the air conditioner to HI FAN mode; set the temperature selector to a higher setting and let the air conditioner or heat pump fan run until the coils are defrosted. Temperatures below 24° F (Comfort Control Center system) or 40° F (mechanical changeover thermostat) will turn off the operation of the heat pump system. It is recommended the auxiliary heat (furnace) be used if the temperatures are subject to dropping below this outdoor temperature. Running of the heat pump in ambient temperature above 70° F will cause the system amperage to increase. Popping of circuit breakers or compressor cycling on overload would be common.

## C22b. Heat Gain

Heat gain can be caused by several factors; A hot, humid and sunny day; a large number of people in the coach; frequent opening of the door; excessive showering and cooking, etc.

Other factors to be taken into consideration as possible heat gain causes are the size of the air conditioner relative to the size of the coach; the "R" factor of insulation; and the size and placement of window. The manufacturer of the RV should be consulted for recommendations.

## C22c. Loose Parts

Loose parts can cause the air conditioner to operate noisily. Check for any loose bolts, any component rubbing against its housing, or any plastic parts which might be cracked. Repair or replace parts as necessary to correct any noise problems.

## C22d. Tubing Vibration

If any of the copper tubing is rubbing against itself or any other part, replace or position tubing as necessary.

## C22e. Condenser or Blower Fan/ Wheel

The blower motor will have either a squirrel-cage or blade-type fan attached to it. Turn the air conditioner circuit breaker to OFF. Adjust the component to make sure it is not rubbing against the bulkhead. If it is a blade-type fan, the blades should be half through the opening for proper operation. Replace the blade fan or squirrel-cage if necessary.

## C22f. Installation

The installation must be according to manufacturer's instructions for the specific mode.

The air conditioner must not be installed in a valley on the roof; water may pool around the drain holes and be drawn into the air conditioner.

Make sure the air conditioner is tightened to the specifications. Overtightening can cause the unit to leak. Use caution not to damage the mounting gasket when placing the air conditioner over the opening, as this can allow water to leak into the coach.

The air conditioner may be installed across a roof seam, but make sure this area is properly sealed to prevent leakage.

## C22g. Drain Pan

Some drain pan problems may be caused by a blockage or restriction of the drain holes. This could be a piece of styrofoam or dirt, etc., in or around a drain hole causing water to accumulate in the drain pan and be sucked up into the unit. Remove any blockage as necessary. Check for water under the drain pan, this could indicate a bad seal between the drain pan and metal base, or a problem in the drain pan.

## C22h. Evaporator Bulkhead Leak

The rear section of the air conditioner which contains the compressor, blower motor and condenser coil is designed to dispose of any water which may enter.

## C22i. Short Cycle

Air Distribution Box Installations

Short cycle is caused by cold air being drawn back into the intake side of the air conditioner before it is mixed with the warmer room air. This may cause the evaporator coil to freeze up, causing the cold control or the thermostat to open the circuit to the compressor. Cold discharge air that enters into the return air portion of the air box can cause a false temperature reading at the thermostat and shut down the compressor.

Two possible causes of this condition are the air box and the discharge duct. If the air box is not sealed tightly against the ceiling template, it will allow cold air to cross over into the return air portion of the air box. Also, if the discharge duct is not installed properly, it can allow cold air to cross over into the return portion of the air box. Make sure you have the correct discharge duct for the thickness of the roof. Seal all problem areas as necessary. You may need to use tape to seal the discharge duct. Also, make sure the discharge louvers are not restricted.

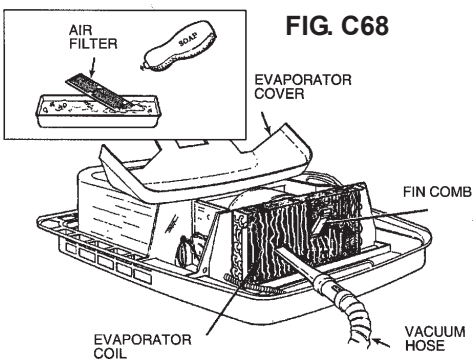

FIG. C68

Ducted Installations
Short cycle could be caused by air being circulated directly on the remote sensor. Make sure you do not have a register too close to the remote sensor. Verify the duct connection at the unit is not leaking into the return air. Seal all problem areas.

## C22j. Air Flow Obstruction

The coils and filters must be kept clean. Obstructions reduce the amount of air passing through the coils. Dirt acts as an insulator reducing the heat transfer across the fins. Turn the air conditioner circuit breaker to OFF. Brush the fins with a soft bristle brush, and vacuum up the residue. The filters should be cleaned in a soap solution and rinsed in clean water. Air-dry the filters before reinstalling; a wet filter can cause insufficient cooling or freeze-up. Air flow obstructions can occur on the outside coil as well. Lint, dust and other small particles can block air flow. The outside coil should be cleaned annually or as needed with a commercial grade coil cleaner.

# C23. Roof Gasket

The unit must be installed on a roof which allows water to drain away. Check the roof around the unit to make sure the water will drain away. If in doubt, stretch a string across the top of the RV. If the string shows a low spot in the area of the unit it must be corrected. See FIG. C69.

FIG. C69

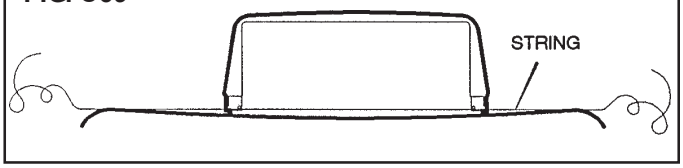


Check mounting gasket for any damages (such as tearing). Check for foreign material (screws, wood chips, metal shavings, etc.), compressed or trapped material under the gasket. Replace with a new gasket if found.

When attaching the unit to the roof, tighten the mounting bolts only enough to compress the roof gasket 1/2 inch. Overtightening of the unit can cause the base pan to bend and allow water under the drain pan. See Section C22g on page 59. Once the gasket has been installed or tightened, it will retain its shape. It is advisable to replace the gasket when the unit is removed from the roof for any reason. See FIG. C70.

FIG. C70

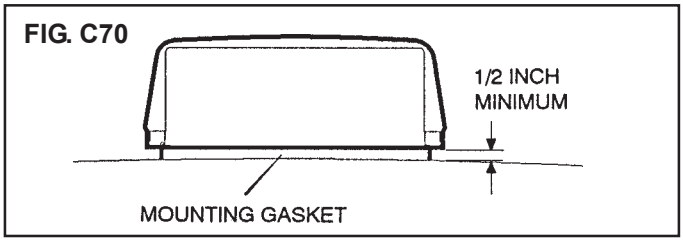


# D. Configuration

The Comfort Control Center configuration relates to setting the Dip switches and particular components (remote temperature sensor, cold [freeze] control and ambient sensor) that can be plugged into the AC power module board according to the type of unit and accessories included.

**Note:** If the configuration of the Dip switches and plug-in components are not correct, the air conditioner or heat pump could operate erratically or not operate at all.

**⚠ CAUTION**

**Improper configuration could cause damage to components of the system.**

We recommend the configuration be done at the time of installation by the installer.

To check the configuration, first locate the Electronic Control Kit on roof-mounted units or the Electronic Control Box on basement mounted units. Next remove any cover or covers for access to Dip switches and Sensor Plugs (P3, P4 and P5). Both are located on the AC Power Module Board. All Dip switches are in the “OFF” position at the time of manufacture of the appliance.

**Note:** The only exceptions are Models 620315.XXX, 39424.XXX and 39224.XXX.

FIG. D1

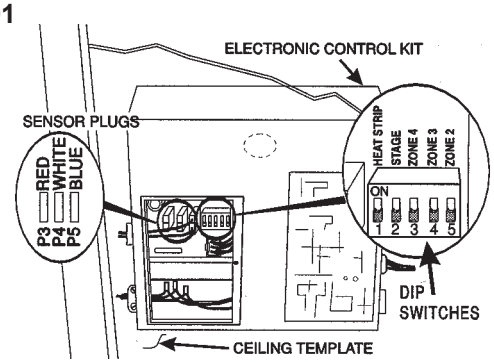


If the configuration is not correct, turn Comfort Control Center OFF before changing the configuration.

FIG. D2

ONE ROOFTOP AIR CONDITIONER

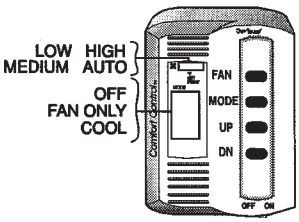

**1. One Comfort Zone**

One Rooftop Air Conditioner

To configure one rooftop air conditioner, all Dip switches are to "OFF" position and the cold (freeze) control is plugged into P5 (blue) connector. Two thermostat wires from the furnace, communications line, AC power and DC power are properly connected to the air conditioner control box.

**Note:** If a remote sensor is used, it must be plugged into the P4 (white) connector.

**⚠ CAUTION**

**Improper connections can cause component damage.**

**FIG. D3**

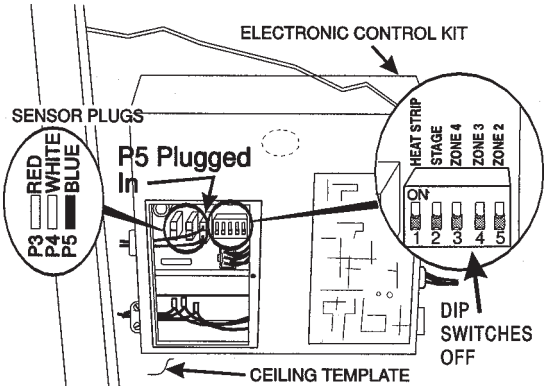


**FIG. D4**

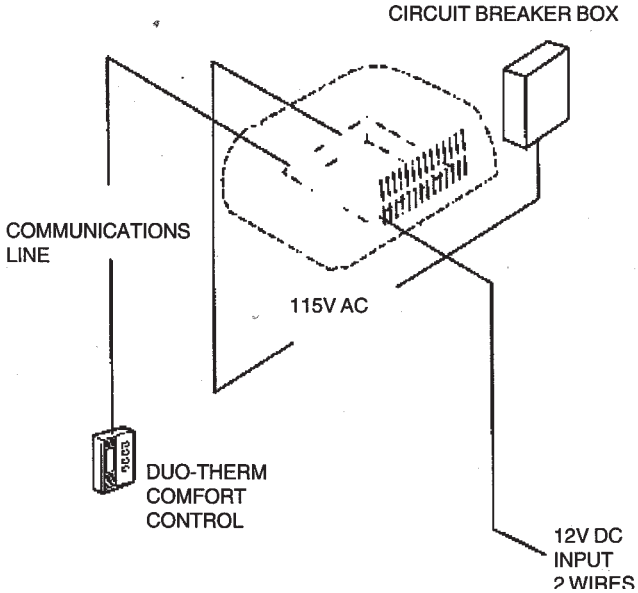


Typical installation for one comfort zone with rooftop air. Comfort control may serve as a room temperature sensor, or a remote sensor may be used.

One Rooftop Air Conditioner plus One Gas Furnace

To configure one rooftop air conditioner plus one gas furnace, all Dip switches are "OFF" and the freeze control is plugged into the proper connector (blue). Two thermostat wires from the furnace, AC power, DC power and communication line are properly connected to the air conditioner control box.

**Note:** If a remote sensor is used, it must be plugged into the P4 (white) connector.

**⚠ CAUTION**

**Improper connections can cause component damage.**

**FIG. D5**

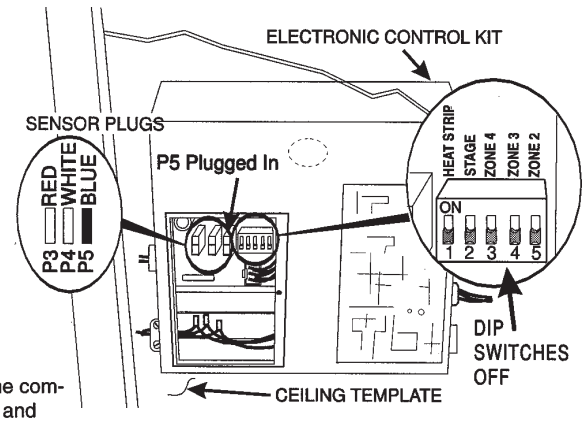


Typical installation for one comfort zone with rooftop air and furnace. Comfort control may serve as a room temperature sensor, or a remote sensor may be used.

**FIG. D6**

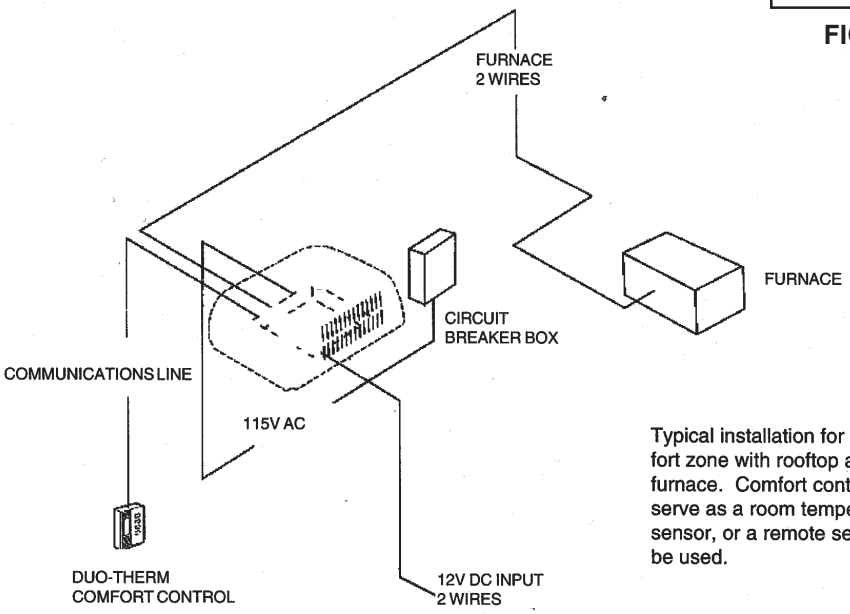

One Rooftop Heat Pump Plus One Gas Furnace
To configure one rooftop heat pump plus one gas furnace, all Dip switches are OFF. The freeze control is NOT used. The blue connector must stay open (P5). The ambient sensor is plugged into the proper connector (red). Two thermostat wires from the furnace, AC power, DC power and communication line are properly connected to the heat pump electronic control box.

**Note:** If a remote sensor is used, it must be plugged into the P4 (white) connector.

**⚠ CAUTION**

**Improper connections can cause component damage.**

FIG. D10

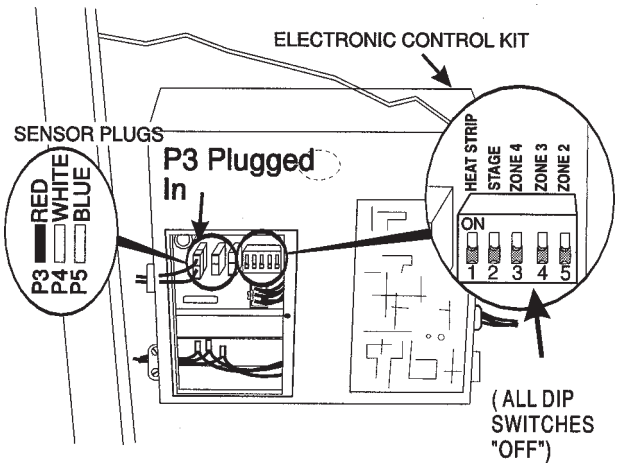


FIG. D12

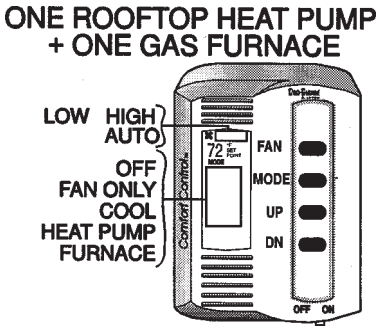


FIG. D11

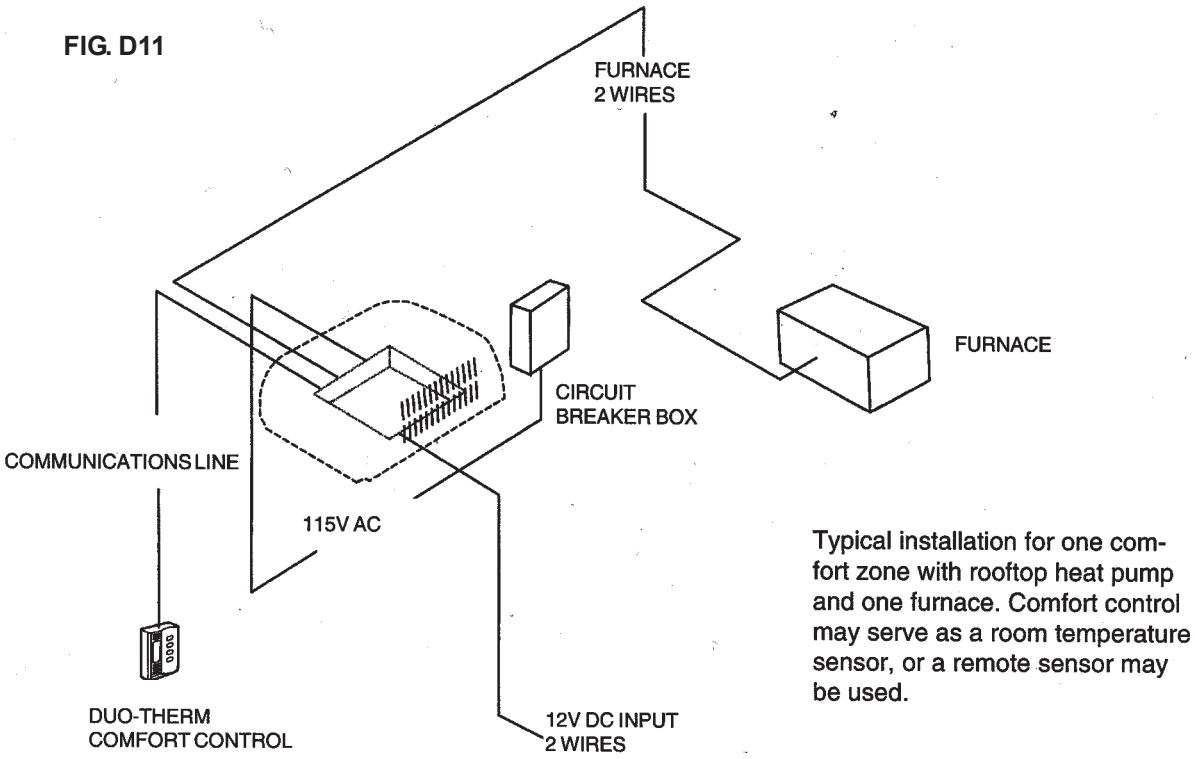


Typical installation for one comfort zone with rooftop heat pump and one furnace. Comfort control may serve as a room temperature sensor, or a remote sensor may be used.

One Basement Air Conditioner Plus One Gas Furnace
To configure one basement air conditioner plus one gas furnace, all Dip switches are OFF. Two thermostat wires from the furnace, AC power, DC power and communication line are properly connected to the heat pump electronic control box.

**Note:** If a remote sensor is used, it must be plugged into the P4 (white) connector.

**⚠ CAUTION**

**Improper connections can cause component damage.**

**FIG. D13**

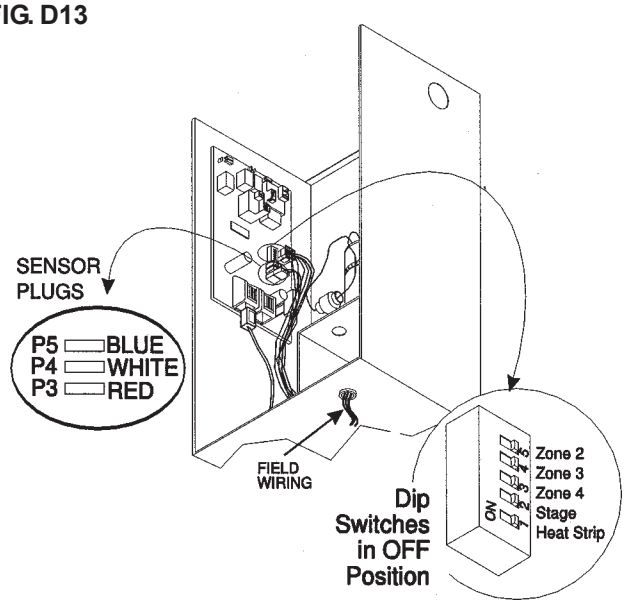


**FIG. D15**

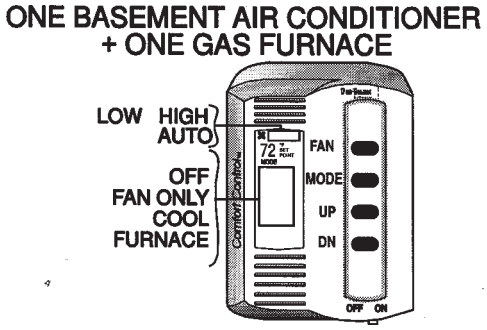


**FIG. D14**

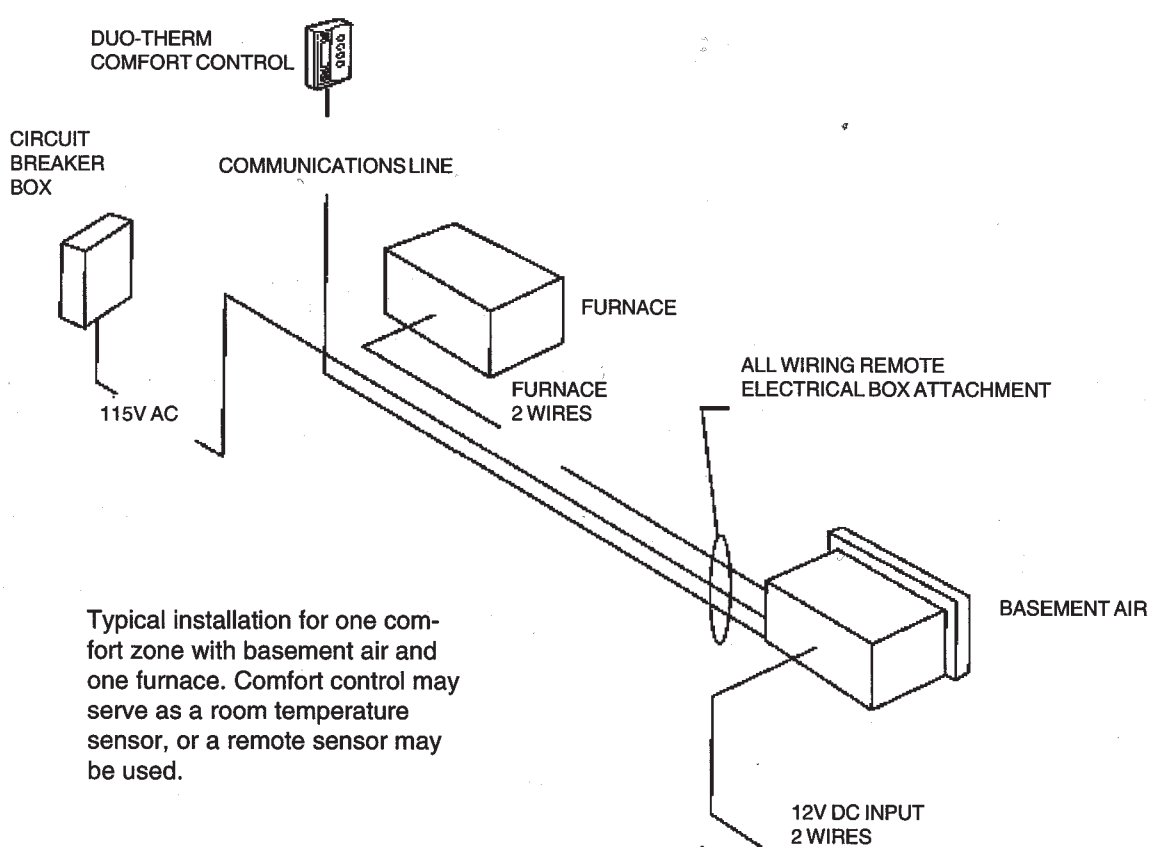


Typical installation for one comfort zone with basement air and one furnace. Comfort control may serve as a room temperature sensor, or a remote sensor may be used.

One Basement Heat Pump Plus One Gas Furnace
To configure one basement heat pump plus one gas furnace, all Dip switches are OFF. The ambient sensor is plugged into the proper connector (red). Two thermostat wires from the furnace, AC power, DC power and communication line are properly connected to the heat pump electronic control box.

**Note:** If a remote sensor is used, it must be plugged into the P4 (white) connector.

**⚠ CAUTION**

**Improper connections can cause component damage.**

FIG. D16

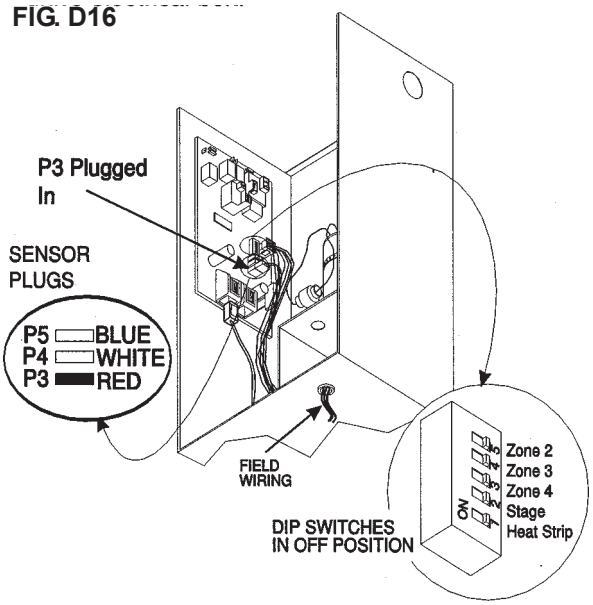


FIG. D18

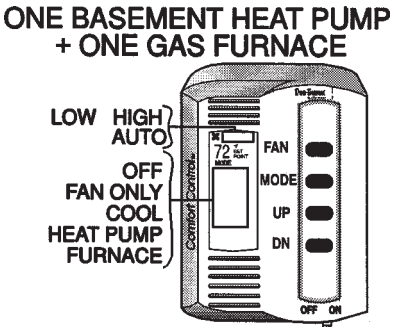


FIG. D17

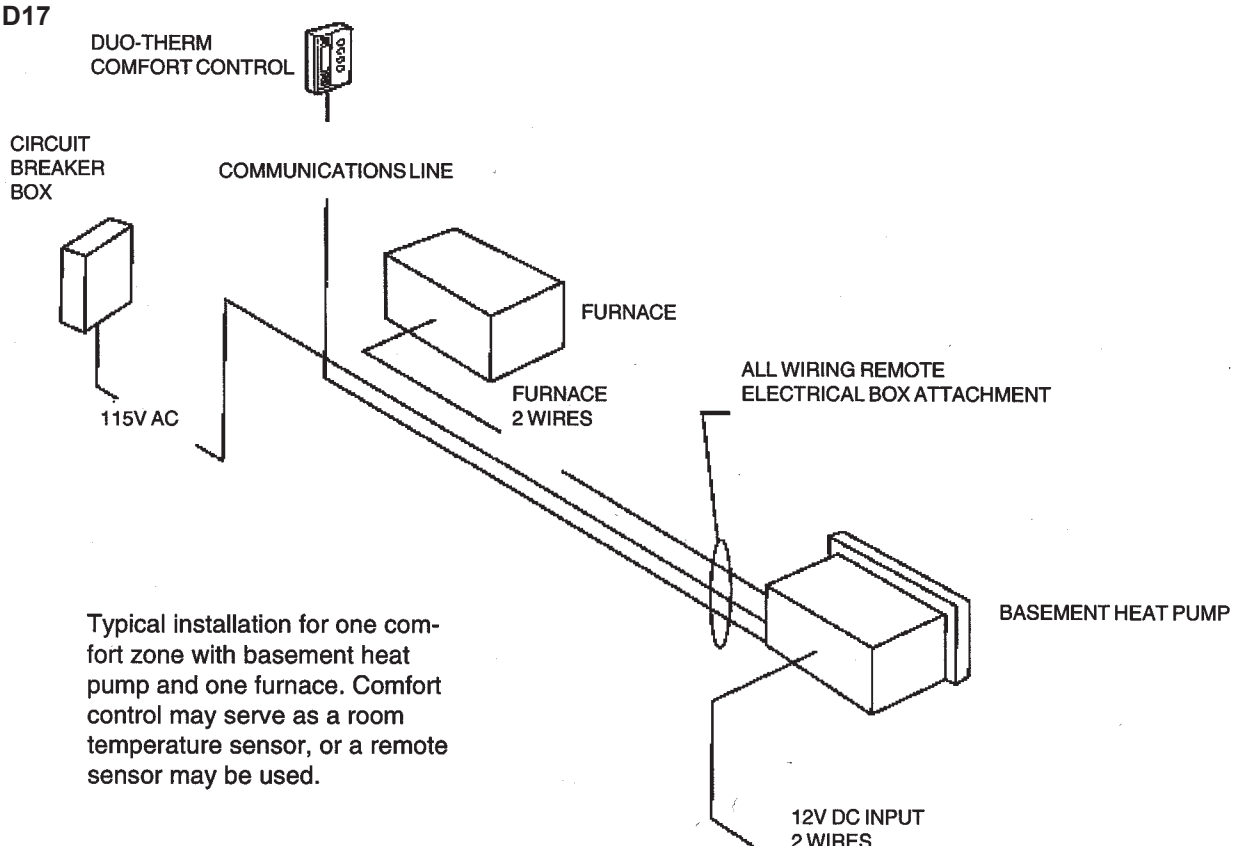


Typical installation for one comfort zone with basement heat pump and one furnace. Comfort control may serve as a room temperature sensor, or a remote sensor may be used.

One Dual Basement Air Conditioner Plus One Gas Furnace
To configure one dual basement air conditioner plus one gas furnace, the STAGE Dip switch on AC power module for Circuit 2 must be turned to ON. All other Dip switches are OFF on both AC power module board. 115V AC (Circuit 1 and Circuit 2) are connected properly to CIR 1 and CIR 2 terminal blocks; 12V DC, two thermostat wires from furnace and cable communications lines are properly connected to Circuit 1 AC power module board in the electrical box.

**Note:** If a remote sensor is used, it must be plugged into the P4 (white) connector.

**⚠ CAUTION**

**Improper connections can cause component damage.**

FIG. D19

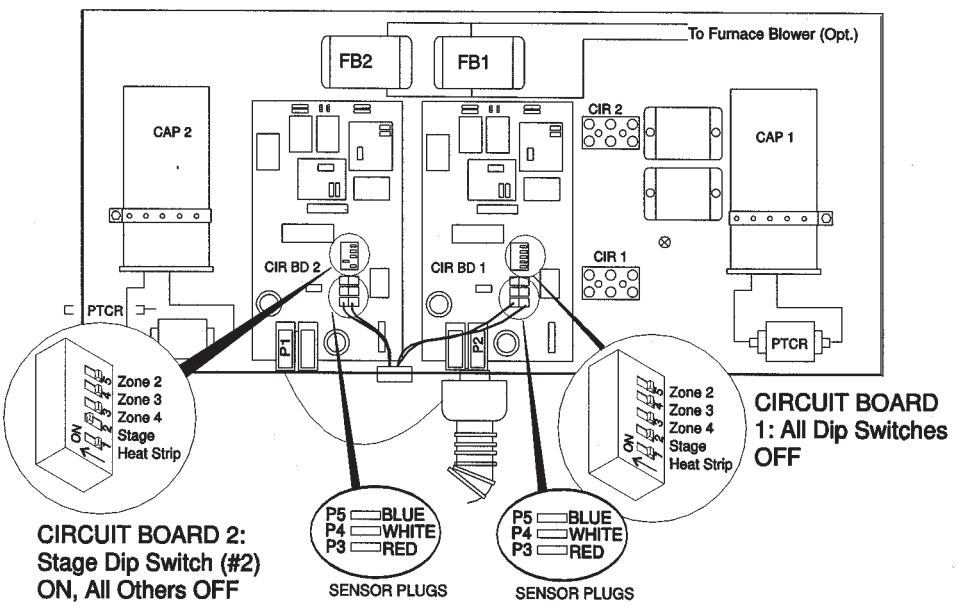


FIG. D21

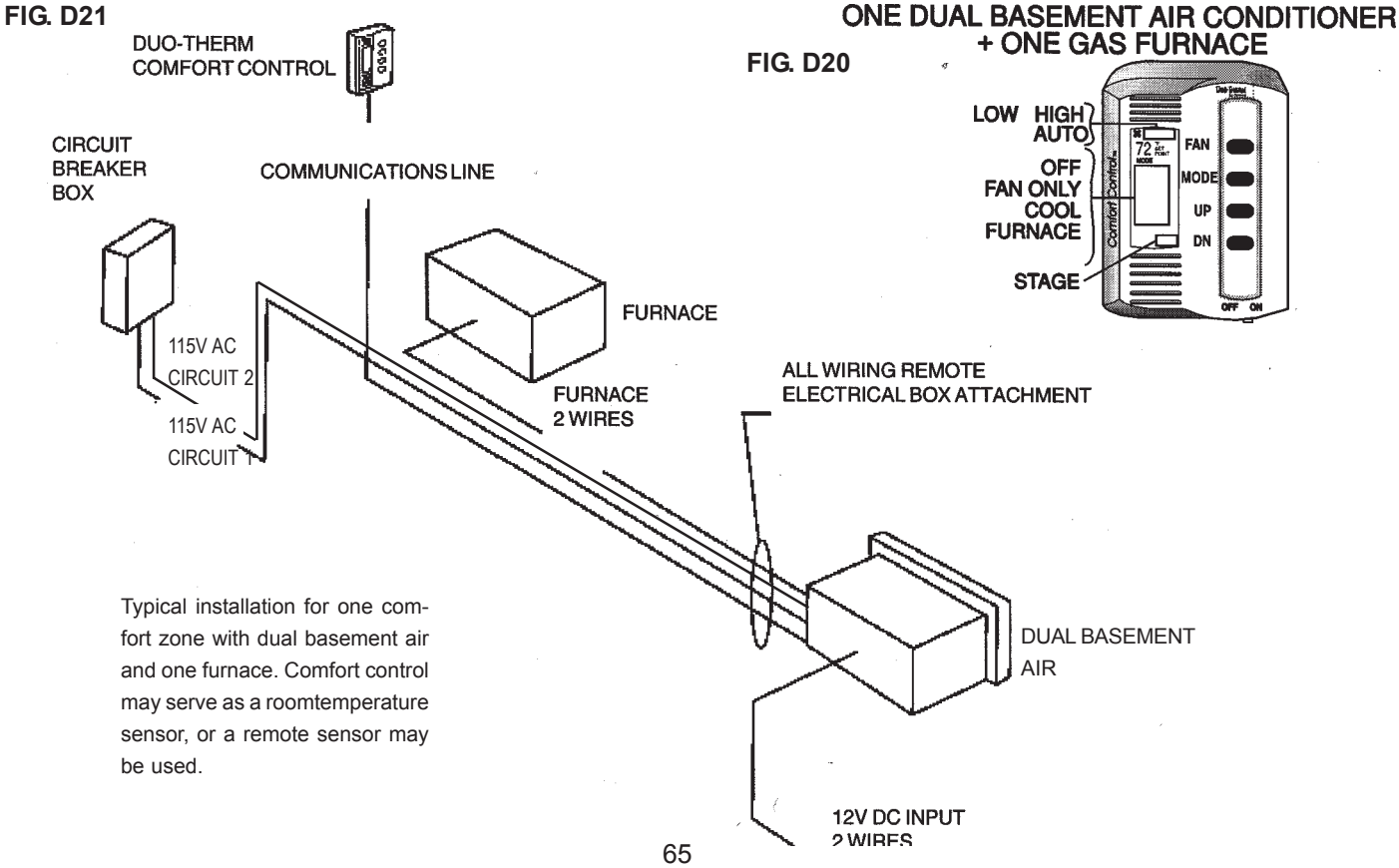


Typical installation for one comfort zone with dual basement air and one furnace. Comfort control may serve as a roomtemperature sensor, or a remote sensor may be used.

One Dual Basement Heat Pump Plus One Gas Furnace
To configure one dual basement heat pump plus one gas furnace, the STAGE Dip switch on AC power module board for Circuit 2 must be turned to ON. All other Dip switches are OFF on both AC power module boards. Two (2) ambient sensors (one per AC power module board), are plugged into the proper connector (red) on each AC power module board. 115V AC (Circuit 1 and Circuit 2) are connected properly to CIR 1 and CIR 2 terminal blocks; 12V DC, two thermostat wires from the furnace and telephone cable communications line are properly connected to Circuit 1 AC power module board in the electrical box.

**FIG. D22**

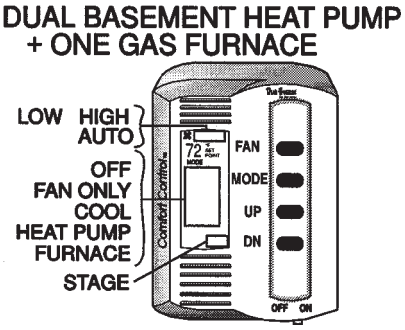


**Note:** If a remote sensor is used, it must be plugged into the P4 (white) connector.

**⚠ CAUTION**

**Improper connections can cause component damage.**

**FIG. D24**

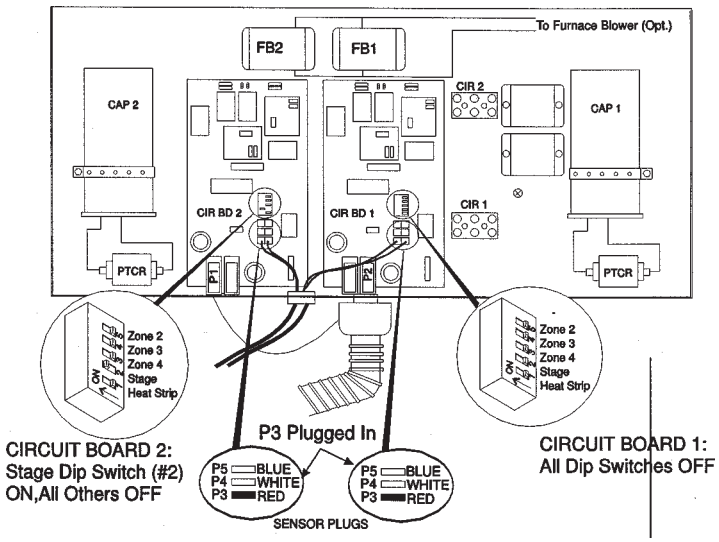


**FIG. D23**

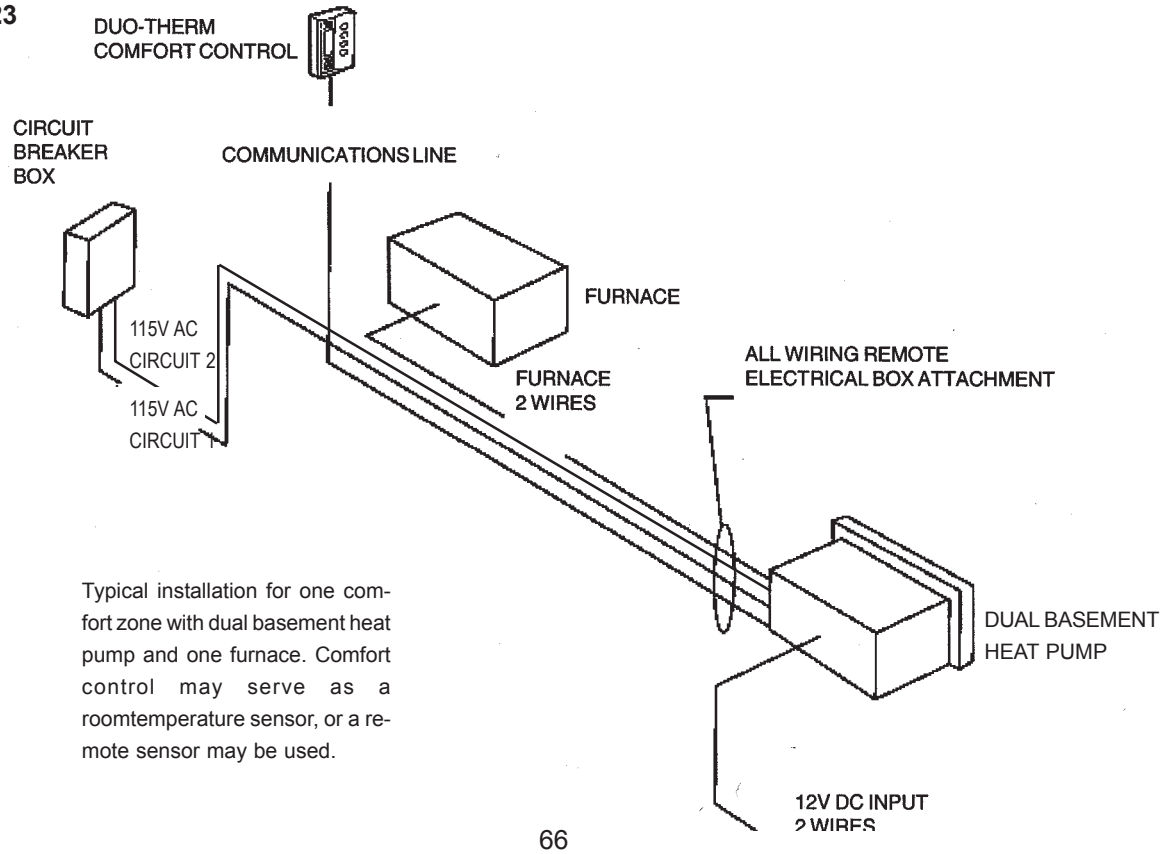


Typical installation for one comfort zone with dual basement heat pump and one furnace. Comfort control may serve as a roomtemperature sensor, or a remote sensor may be used.

**2. Two Comfort Zones**

Two Rooftop Air Conditioners Plus One Gas Furnace

To configure two rooftop air conditioners plus one gas furnace, **ZONES** need to be established. For explanation purposes the front unit will be ZONE 1 and the rear unit will be ZONE 2. ZONES can be arranged per the customer's wishes.

EACH unit must have AC power connected to it. DC power and the communications line from the Comfort Control Center is only connected to one unit control box.

A second communications line must be connected between the two units' control boxes.

Two (2) furnace thermostat wires must be routed to either unit, but to only ONE.

For explanation purposes, the 12V DC, Comfort Control Center communications line and the two (2) furnace thermostat wires are to ZONE 1 (front) unit.

ZONE 1 configuration should have all Dip switches in the OFF position, and the cold (freeze) control plugged into P5 (blue) connector on the AC power module board.

**FIG. D25**

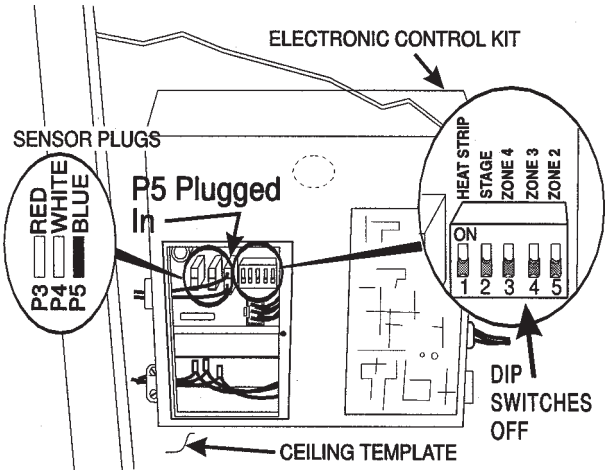


ZONE 2 configuration should have Dip switch 5 (ZONE 2) in the ON position and all other Dip switches in the OFF position. The cold (freeze) control should be plugged into P5 (blue) connector and the remote sensor plugged into P4 (white) connector on the AC power module.

**FIG. D26**

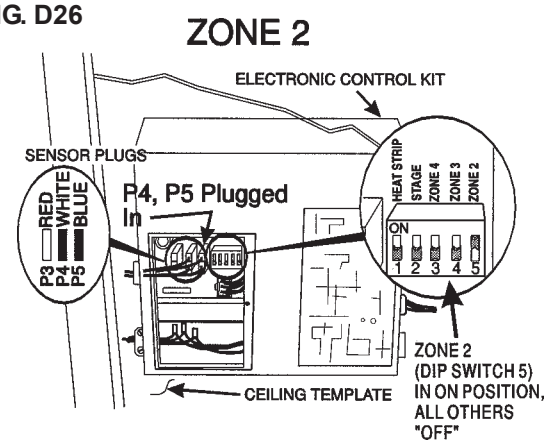


**Note:** If a remote sensor(s) is used, it must be connected into the P4 (white) connector.

**⚠ CAUTION**

**Improper connections can cause component damage.**

FIG. D27

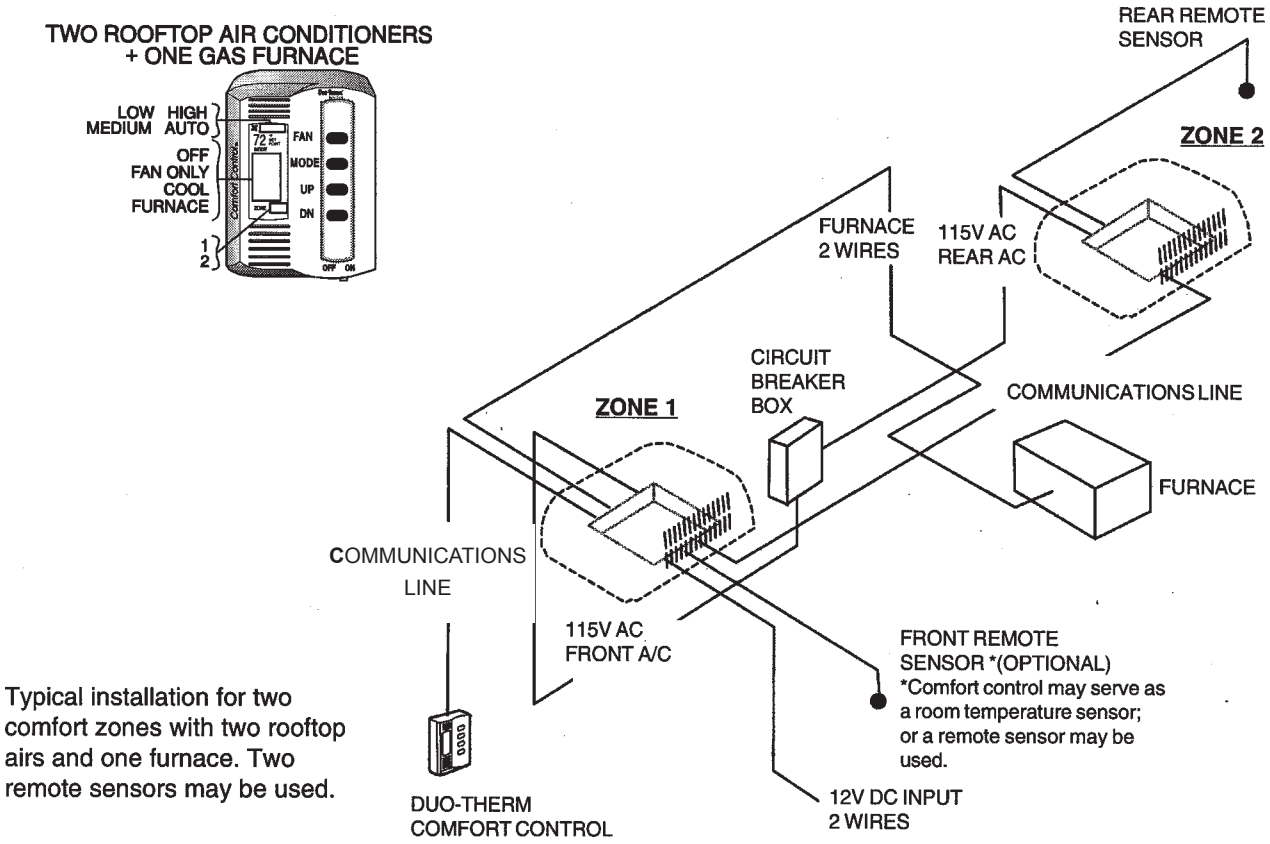


Typical installation for two comfort zones with two rooftop airs and one furnace. Two remote sensors may be used.

Two Rooftop Air Conditioners with Heat Strip Plus One Furnace

To configure two rooftop air conditioners with heat strip plus one gas furnace, **ZONES** need to be established. For explanation purposes the front air conditioner will be ZONE 1 and the rear air conditioner will be ZONE 2. ZONES can be arranged per the customer's wishes.

EACH unit must have AC power connected to it. DC power and the communications line from the Comfort Control Center is only connected to one unit control box.

A second communications line must be connected between the two units' control boxes.

Two (2) furnace thermostat wires must be routed to ONE unit.

For explanation purposes the 12V DC, Comfort Control Center communications line and the two (2) furnace thermostat wires are to ZONE 1 (front) unit.

**ZONE 1** configuration should have Dip switch 1 (heat strip) to ON position and all other Dip switches to OFF position. The cold (freeze) control should be plugged into P5 (blue) connector on the AC power module.

FIG. D28

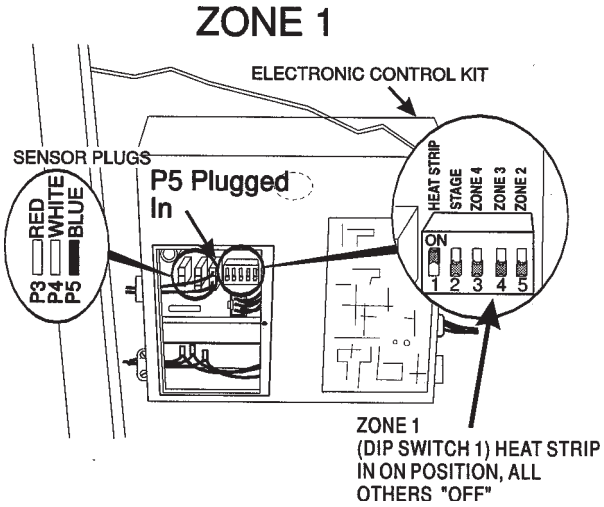

**ZONE 1** configuration should have Dip switch 1 (heat strip) to ON position and all other Dip switches to OFF position. The cold (freeze) control should be plugged into P5 (blue) connector on the AC power module board.

**Note:** If a remote sensor is used, it must be plugged into the P4 (white) connector.

**⚠ CAUTION**

**Improper connections can cause component damage.**

**FIG. D29**

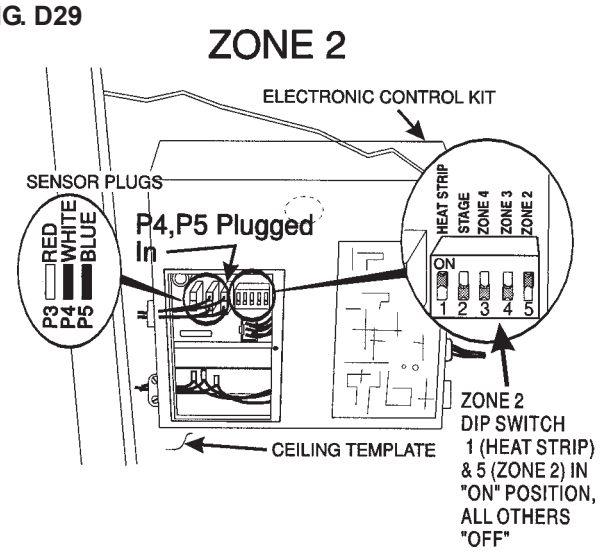


**FIG. D30**

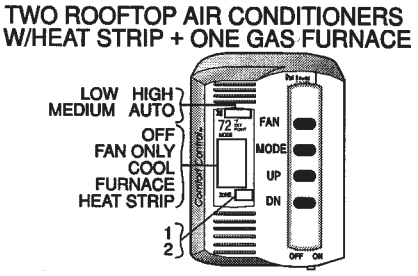


**FIG. D31**

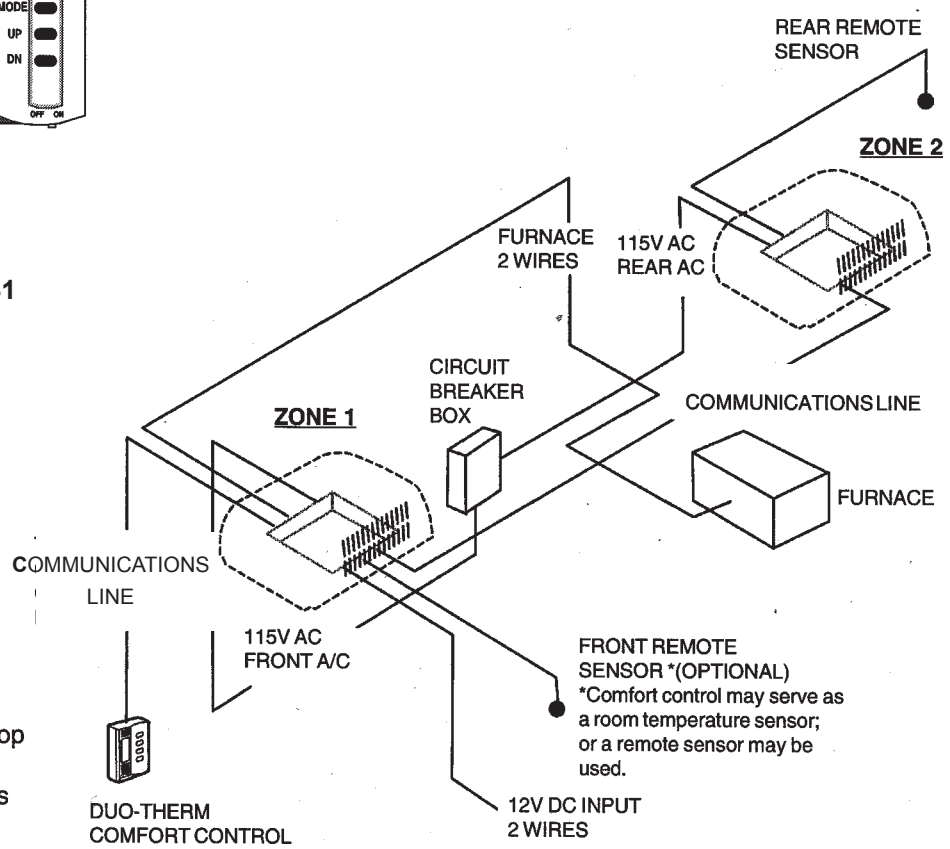


Typical installation for two comfort zones with two rooftop airs with heat strip and one furnace. Two remote sensors may be used.

One Rooftop Air Conditioner Plus One Rooftop Heat Pump Plus One Gas Furnace

To configure one rooftop air conditioner plus one rooftop heat pump plus one gas furnace, ZONES need to be established. For explanation purposes the front unit will be a heat pump on ZONE 1. The rear unit will be and air conditioner on ZONE 2. Zones can be arranged per the customer's wishes.

EACH unit must have AC power connected to it. DC power and the communications line from the Comfort Control Center are only connected to one control box.

A second communications line must be connected between the two units control boxes.

Two (2) furnace thermostat wires must be routed to ONE unit.

For explanation purposes the 12V DC, Comfort Control Center communication line and the two (2) furnace thermostat wires are to ZONE 1 (front) unit.

ZONE 1 (Heat Pump) configuration should have all Dip switches to OFF position. The cold (freeze) control is NOT used. The P5 (blue) connector must stay open. The ambient sensor must be plugged into the P3 (red) connector on the AC power module board.

FIG. D32

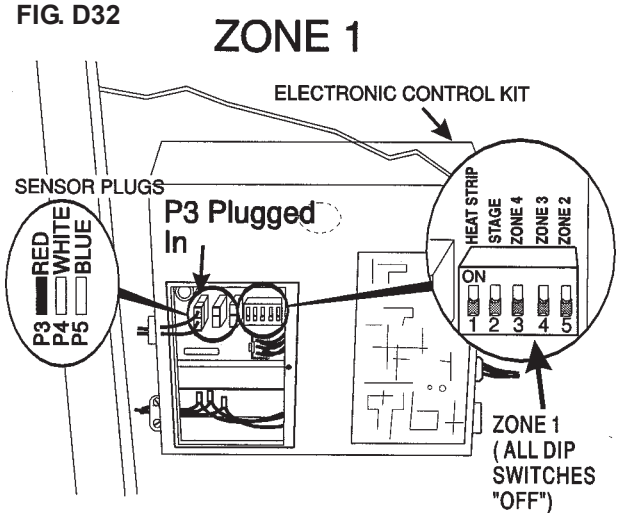


ZONE 2 (Air Conditioner) configuration should have Dip switch 5 (ZONE 2) to ON position and all other Dip switches to OFF position. The cold (freeze) control should be plugged into P5 (blue) connector and remote sensor plugged into P4 (white) connector on the AC power module board.

FIG. D33

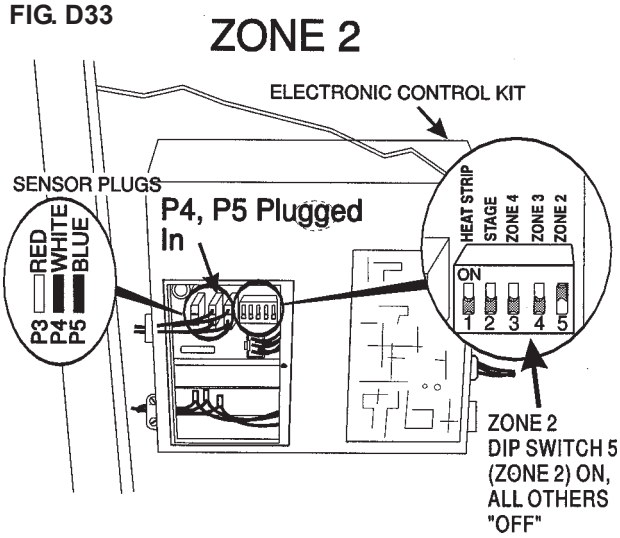


**Note:** If a remote sensor is used, it must be plugged into the P4 (white) connector.

**⚠ CAUTION**

**Improper connections can cause component damage.**

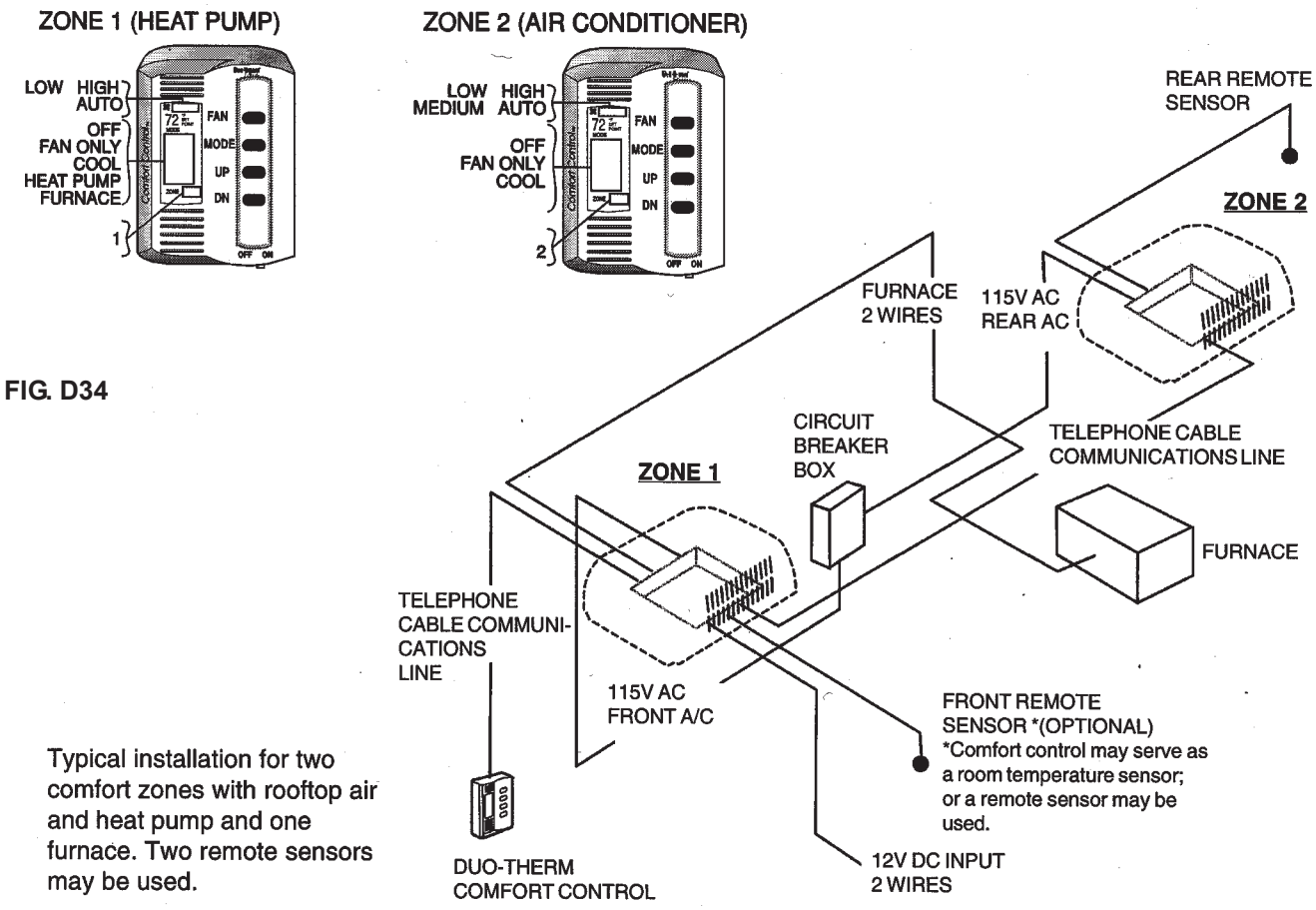


FIG. D34

Typical installation for two comfort zones with rooftop air and heat pump and one furnace. Two remote sensors may be used.

Two Rooftop Heat Pumps Plus One Gas Furnace
To configure two rooftop heat pumps plus one gas furnace, ZONES need to be established. For explanation purposes, the front unit will be ZONE 1 and the rear unit will be ZONE 2. Zones can be arranged per the customer's wishes.

EACH unit must have AC power connected to it. Only one unit requires 12V DC. Communications line must be between the Comfort Control Center and ONE unit.

A second communications line must be connected between the two units control boxes.

Two (2) furnace thermostat wires must be routed to ONE unit.

For explanation purposes the 12V DC, Comfort Control Center telephone communications line and the two (2) furnace thermostat wires are to ZONE 1 (front) unit.

ZONE 1 configuration should have all Dip switches to OFF position. The cold (freeze) control is NOT used. The P5 (blue) connector must stay open. The ambient sensor must be plugged into the P3 (red) connector on the AC power module.

FIG. D35

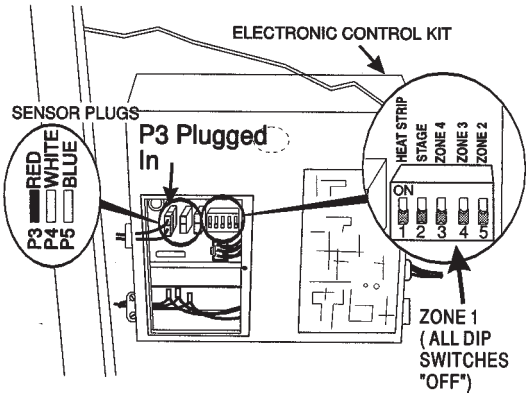

ZONE 2 configuration should have Dip switch 5 (ZONE 2) to ON position and all other Dip switches to OFF position. The cold (freeze) control is NOT used. The P5 (blue) connector must stay open. The ambient sensor must be plugged into the P3 (red) connector on the AC power module.

**Note:** If a remote sensor is used, it must be plugged into the P4 (white) connector.

**⚠ CAUTION**

**Improper connections can cause component damage.**

FIG. D36

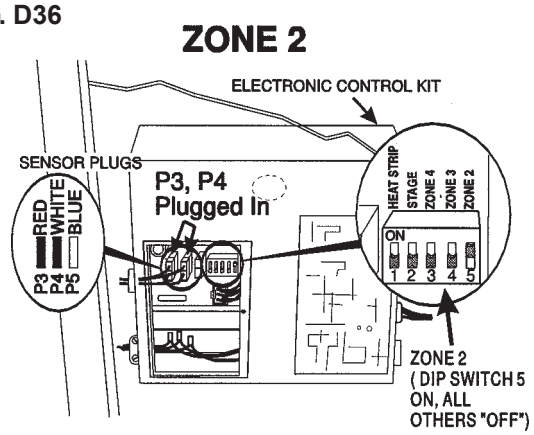


FIG. D37

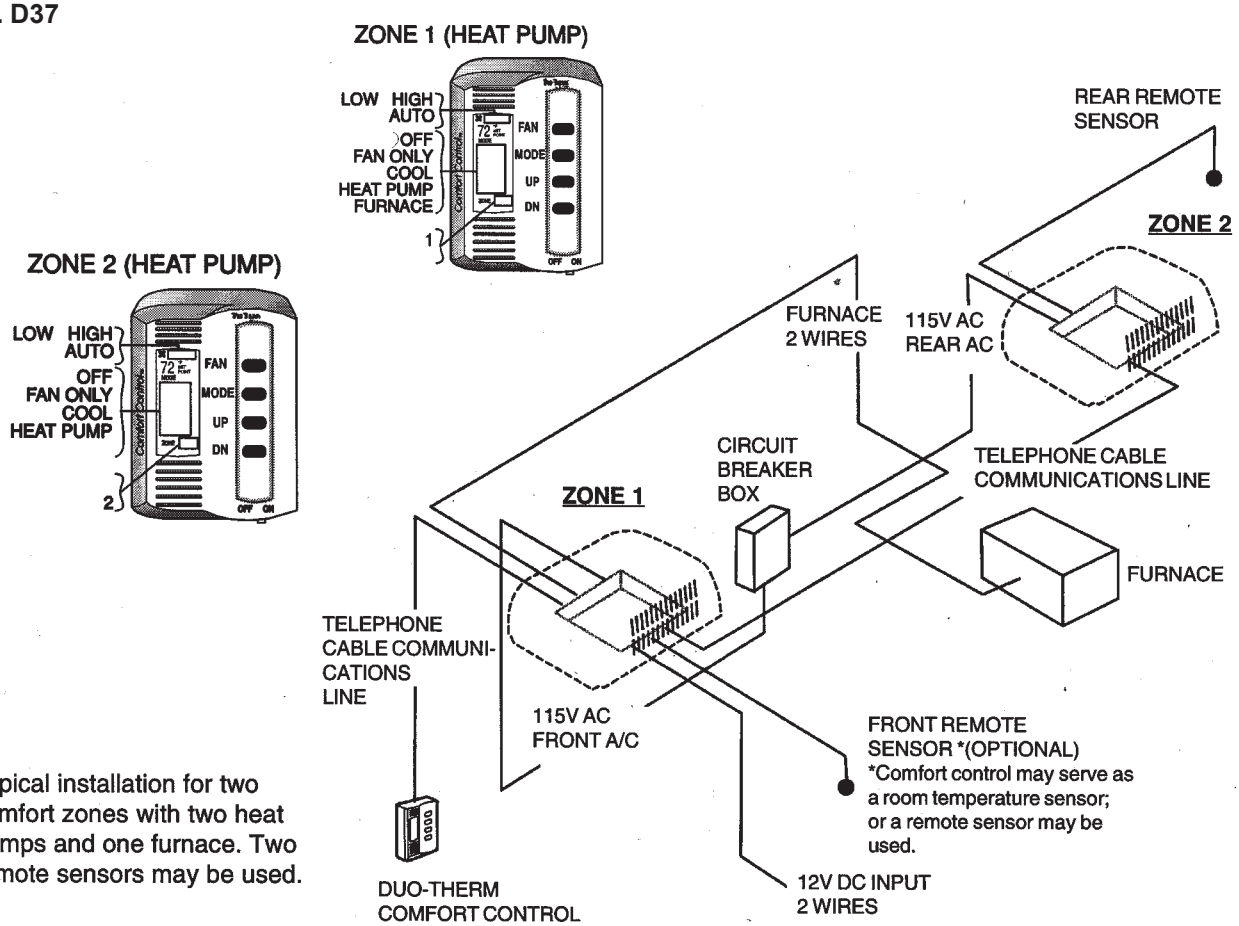


Typical installation for two comfort zones with two heat pumps and one furnace. Two remote sensors may be used.

Two Basement Air Conditioners Plus One Gas Furnace
To configure two basement air conditioners plus one gas furnace, ZONES need to be established. For explanation purposes, the front unit will be ZONE 1, and the rear unit will be ZONE 2. Zones can be arranged per the customer's wishes.

EACH unit must have 115V AC. Only one unit requires 12V DC. Communications line must be between the Comfort Control Center and ONE unit.

A second communications line must be connected between the two units control boxes.

Two (2) furnace thermostat wires must be routed to ONE unit.

For explanation purposes the 12V DC, Comfort Control Center communications line and the two (2) furnace thermostat wires are to ZONE 1 (front) unit.

ZONE 1 configuration should have all Dip switches to OFF position.

ZONE 2 configuration should have Dip switch 5 (ZONE 2) to ON position and all other Dip switches to OFF position.

**Note:** If a remote sensor is used, it must be plugged into the P4 (white) connector.

**⚠ CAUTION**

**Improper connections can cause component damage.**

FIG. D38

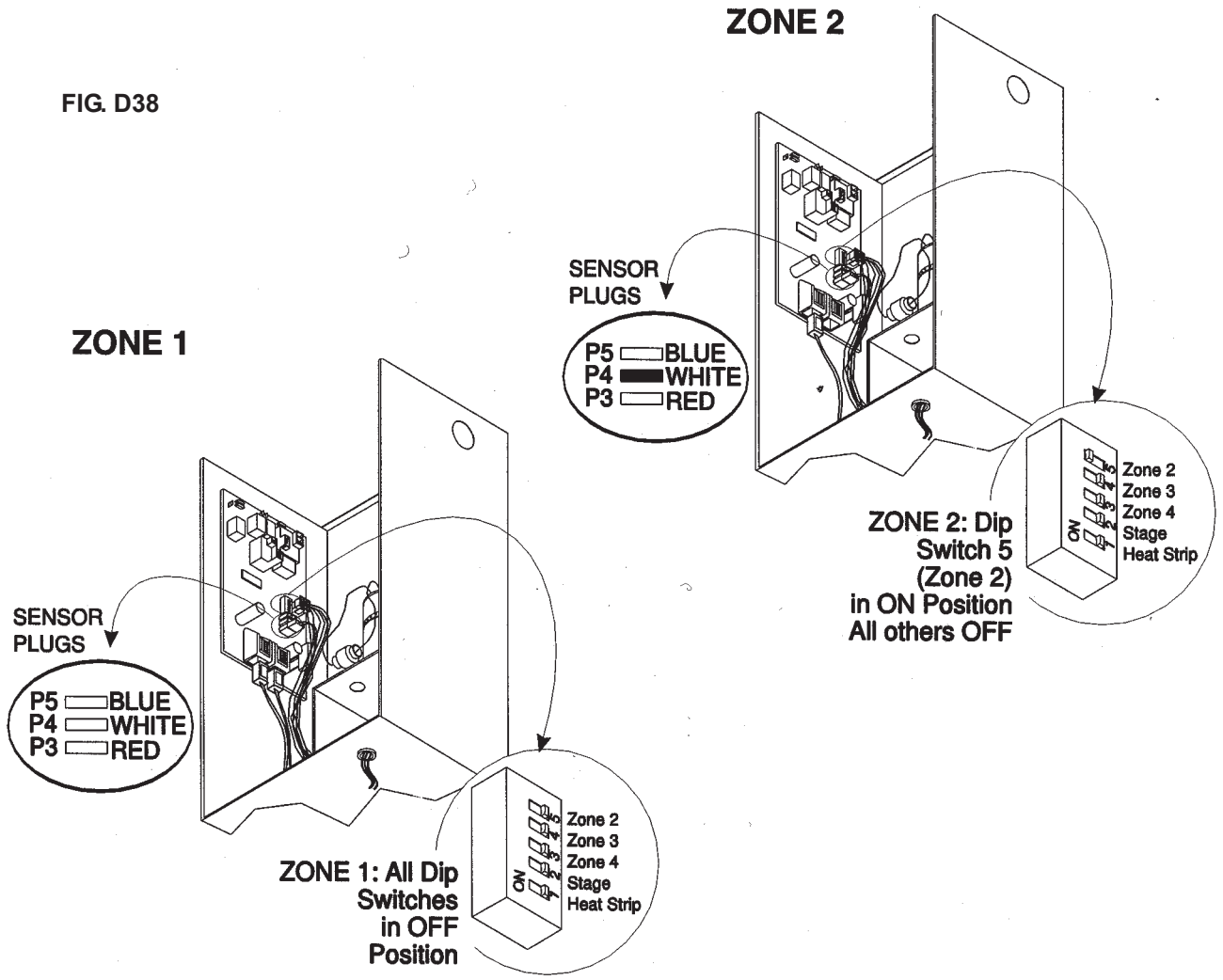

FIG. D39

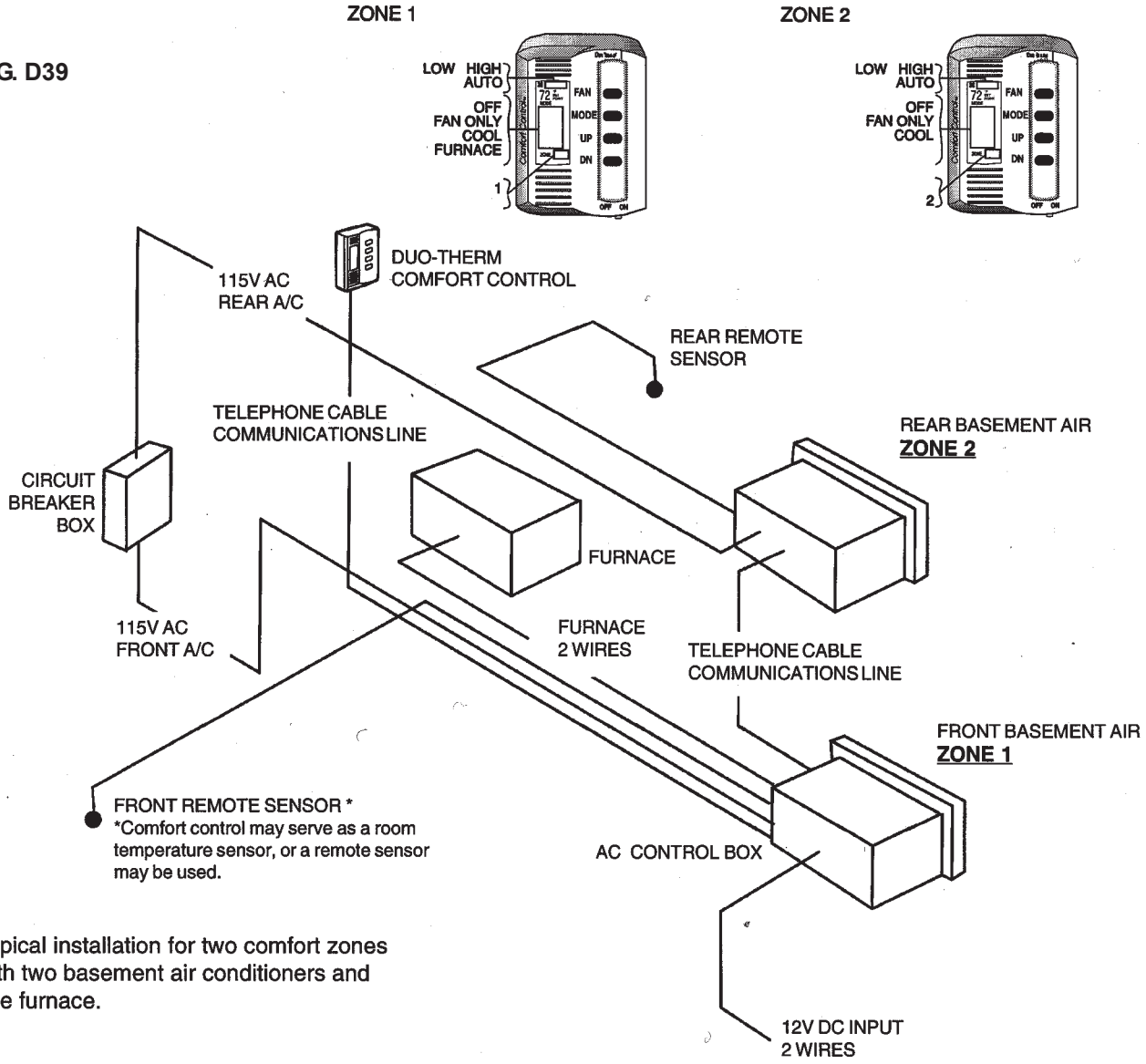


Typical installation for two comfort zones with two basement air conditioners and one furnace.

Two Basement Heat Pumps Plus One Gas Furnace
To configure two basement heat pumps plus one gas furnace, ZONES need to be established. For explanation purposes, the front unit will be ZONE 1, and the rear unit will be ZONE 2. Zones can be arranged per the customer's wishes.

EACH unit must have 115V AC. Only one unit requires 12V DC. Communications line must be between the Comfort Control Center and ONE unit.

A second communications line must be connected between the two units control boxes.

Two (2) furnace thermostat wires must be routed to ONE unit.

For explanation purposes the 12V DC, Comfort Control Center communications line and the two (2) furnace thermostat wires are to ZONE 1 (front) unit.

ZONE 1 configuration should have all Dip switches to OFF position. The ambient sensor should be plugged into P3 (red) connector.

ZONE 2 configuration should have Dip switch 5 (ZONE 2) to ON position and all other Dip switches to OFF position. The ambient sensor should be plugged into P3 (red) connector. The remote sensor should be plugged into P4 (white) connector.

**Note:** If a remote sensor is used, it must be plugged into the P4 (white) connector.

**⚠ CAUTION**

**Improper connections can cause component damage.**

FIG. D40

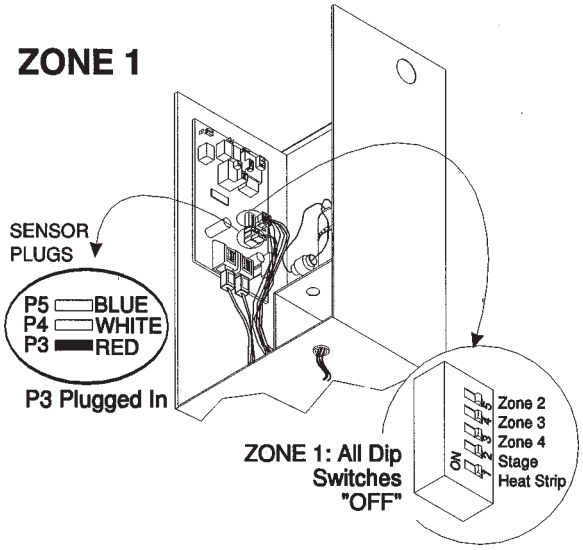


FIG. D41

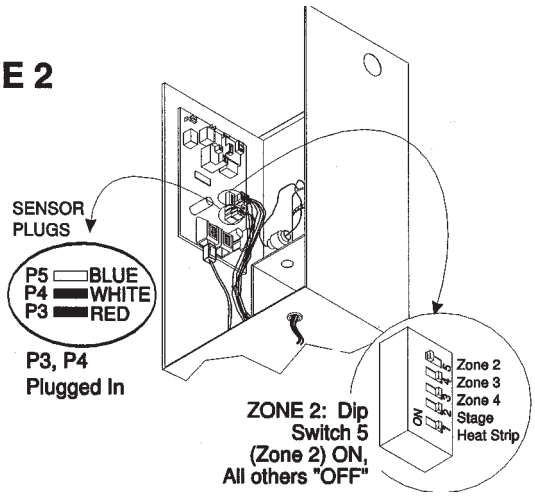


FIG. D42

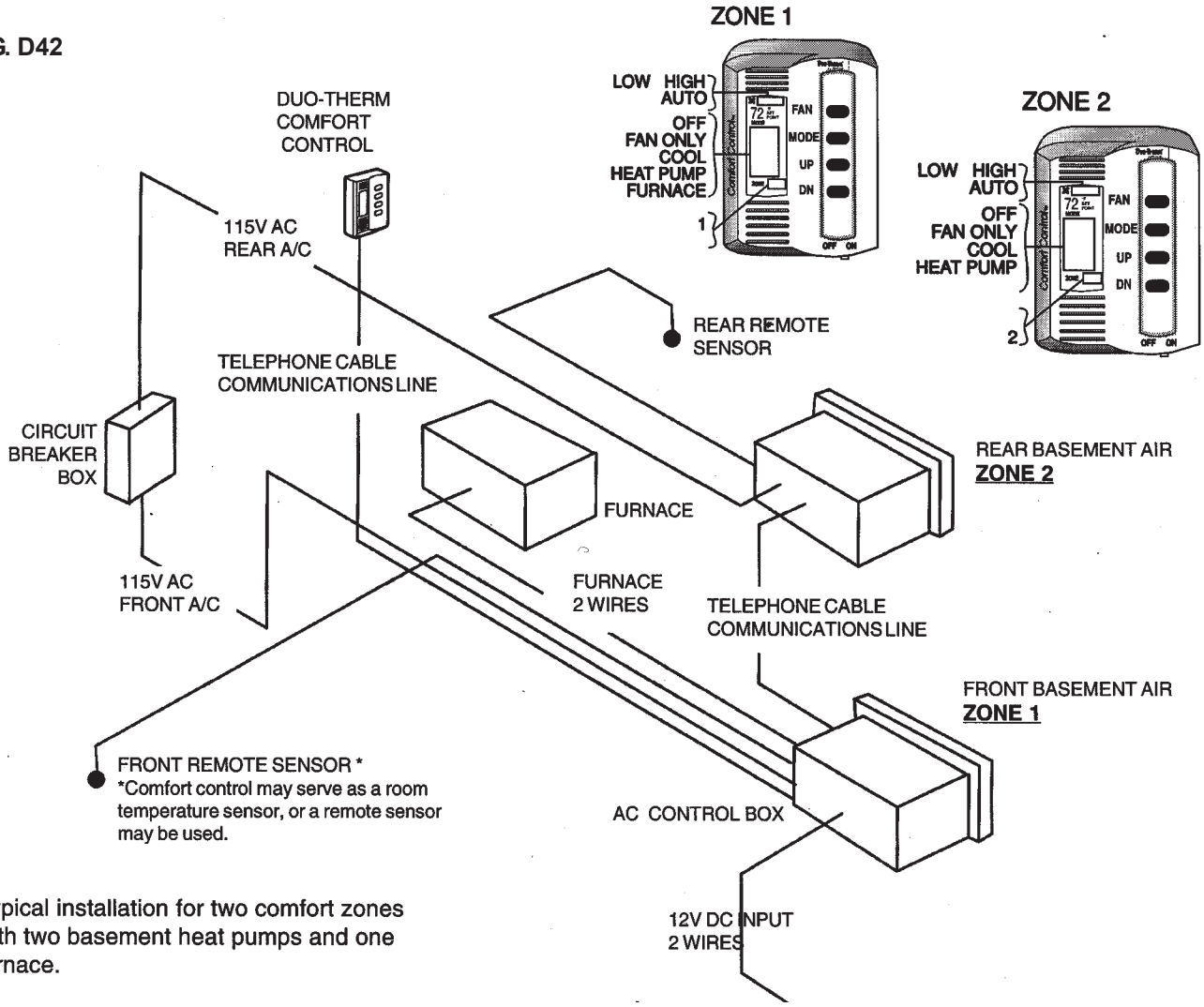


Typical installation for two comfort zones with two basement heat pumps and one furnace.

Two Rooftop Air Conditioners Plus Two Gas Furnaces
To configure two rooftop air conditioners plus two gas furnaces, ZONES need to be established. For explanation purposes, the front air conditioner and one furnace will be Zone 1, and the rear air conditioner and one furnace will be Zone 2. Zones can be arranged per the customer's wishes.

EACH air conditioner must have 115V AC. Only one air conditioner required 12V DC. Communications line must be between the Comfort Control Center and ONE air conditioner only.

A second communications line must be connected between the two air conditioners control boxes.

Two (2) furnace thermostat wires must be between front furnace and front air conditioner. Two (2) furnace thermostat wires must be between rear furnace and rear air conditioner.

For explanation purposes the 12V DC, Comfort Control Center communications line and the two (2) furnace thermostat wires from front furnace are to ZONE 1 (front) air conditioner.

The two (2) furnace thermostat wires from rear furnace are to Zone 2 (rear) air conditioner.

ZONE 1 configuration should have all Dip switches to OFF position and the cold (freeze) control plugged into P5 (blue) connector.

ZONE 2 configuration should have Dip switch 5 (ZONE 2) to ON position and all other Dip switches to OFF position. The cold (freeze) control should be plugged into P5 (blue) connector. The remote sensor (if used) must be plugged into P4 (white) connector.

**Note:** If a remote sensor is used, it must be plugged into the P4 (white) connector.

**⚠ CAUTION**

**Improper connections can cause component damage.**

FIG. D43

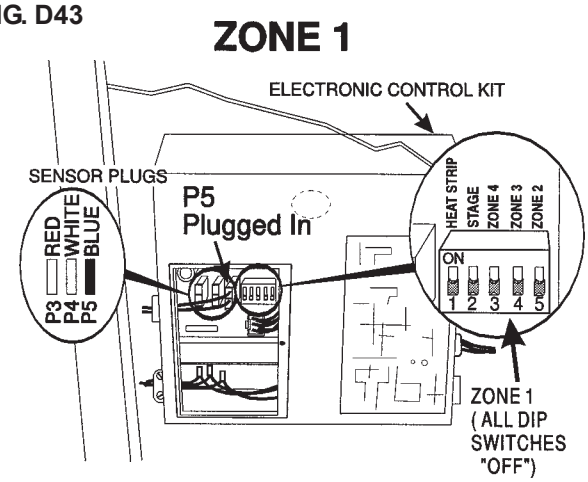


FIG. D44

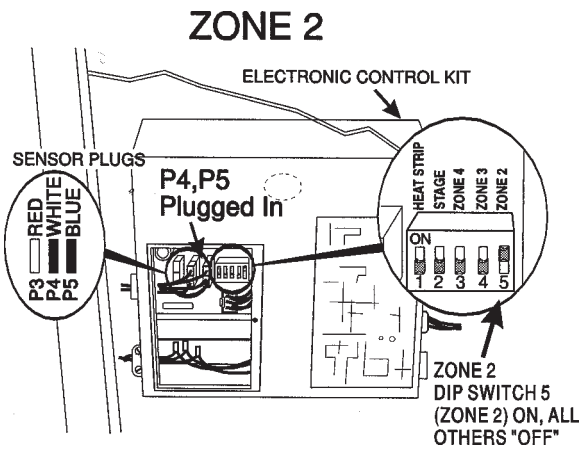

FIG. D45

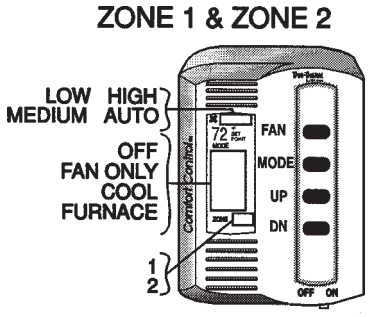


FIG. D46

Typical installation for two comfort zones with two rooftop air conditioners and two furnaces.

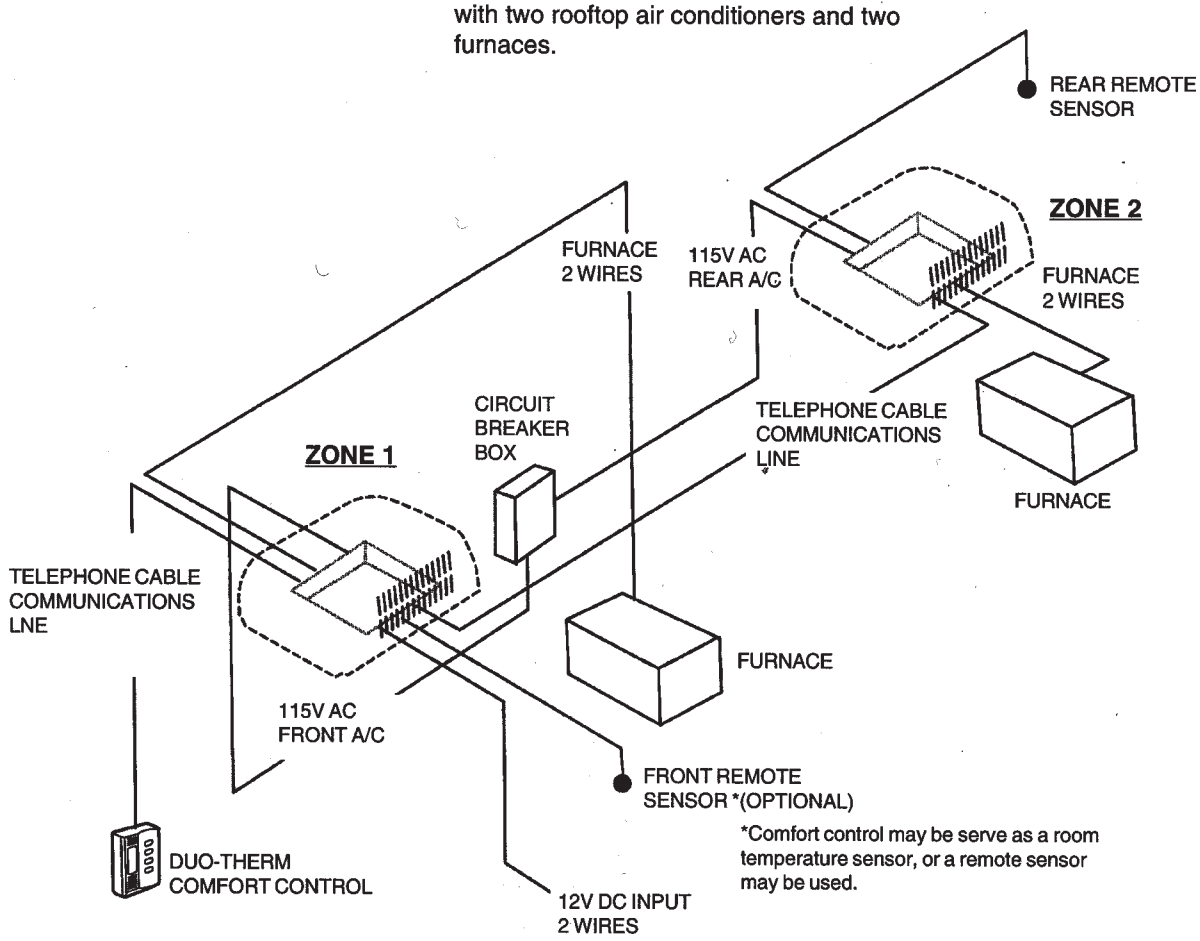

One Rooftop Heat Pump Plus One Rooftop Air Conditioner Plus Two Gas Furnaces

To configure one rooftop heat pump plus one rooftop air conditioner plus two gas furnaces, ZONES need to be established. For explanation purposes, the front unit (heat pump) and one furnace will be Zone 1; and the rear unit (air conditioner) and one furnace will be Zone 2. Zones can be arranged per the customer's wishes.

EACH air conditioner must have 115V AC. Only one air conditioner requires 12V DC. Communications line must be between the Comfort Control Center and ONE unit only.

A second communications line must be connected between the two units control boxes.

Two (2) furnace thermostat wires must be between front unit and front furnace. Two (2) furnace thermostat wires must be between rear unit and rear furnace.

For explanation purposes the 12V DC, Comfort Control Center communications line and the two (2) furnace thermostat wires from front furnace are to ZONE 1 (front) unit.

The two (2) furnace thermostat wires from rear furnace are to ZONE 2 (rear) unit.

ZONE 1 (heat pump) configuration should have all Dip switches to OFF position. The cold (freeze) control is NOT used and P5 (blue) connector should remain open. The ambient sensor should connect into P3 (red) connector.

FIG. D47

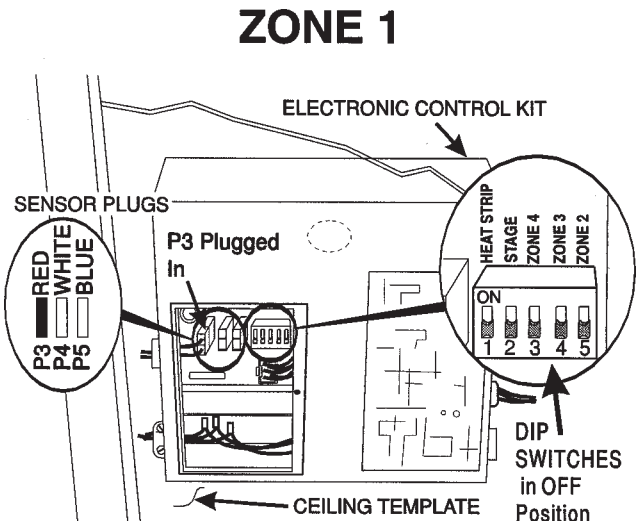


ZONE 2 (air conditioner) configuration should have Dip switch 5 (ZONE 2) to ON position and all other Dip switches to OFF position. The cold (freeze) control should be plugged into P5 (blue) connector. The remote sensor (if used) must be plugged into P4 (white) connector.

FIG. D48

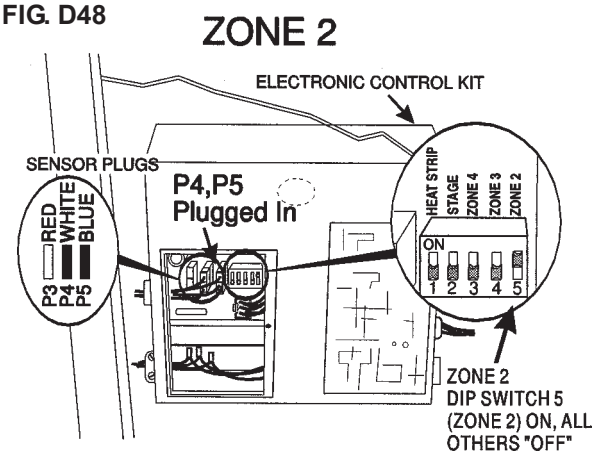


**Note:** If a remote sensor is used, it must be plugged into the P4 (white) connector.

**⚠ CAUTION**

**Improper connections can cause component damage.**

FIG. D49

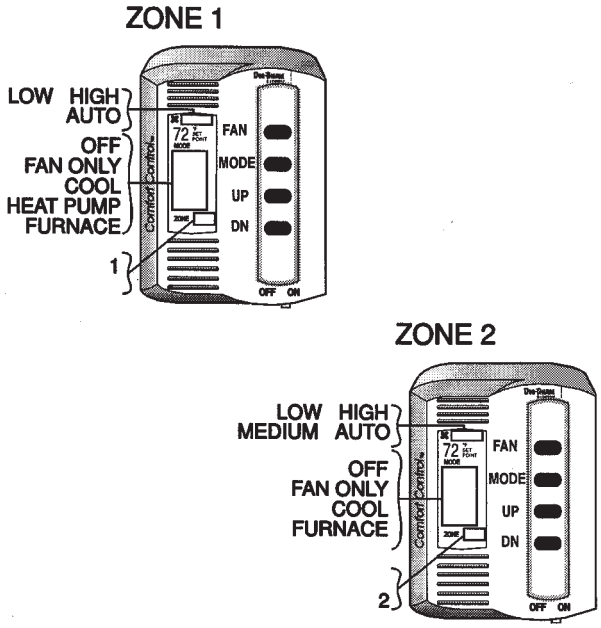

**FIG. D50**

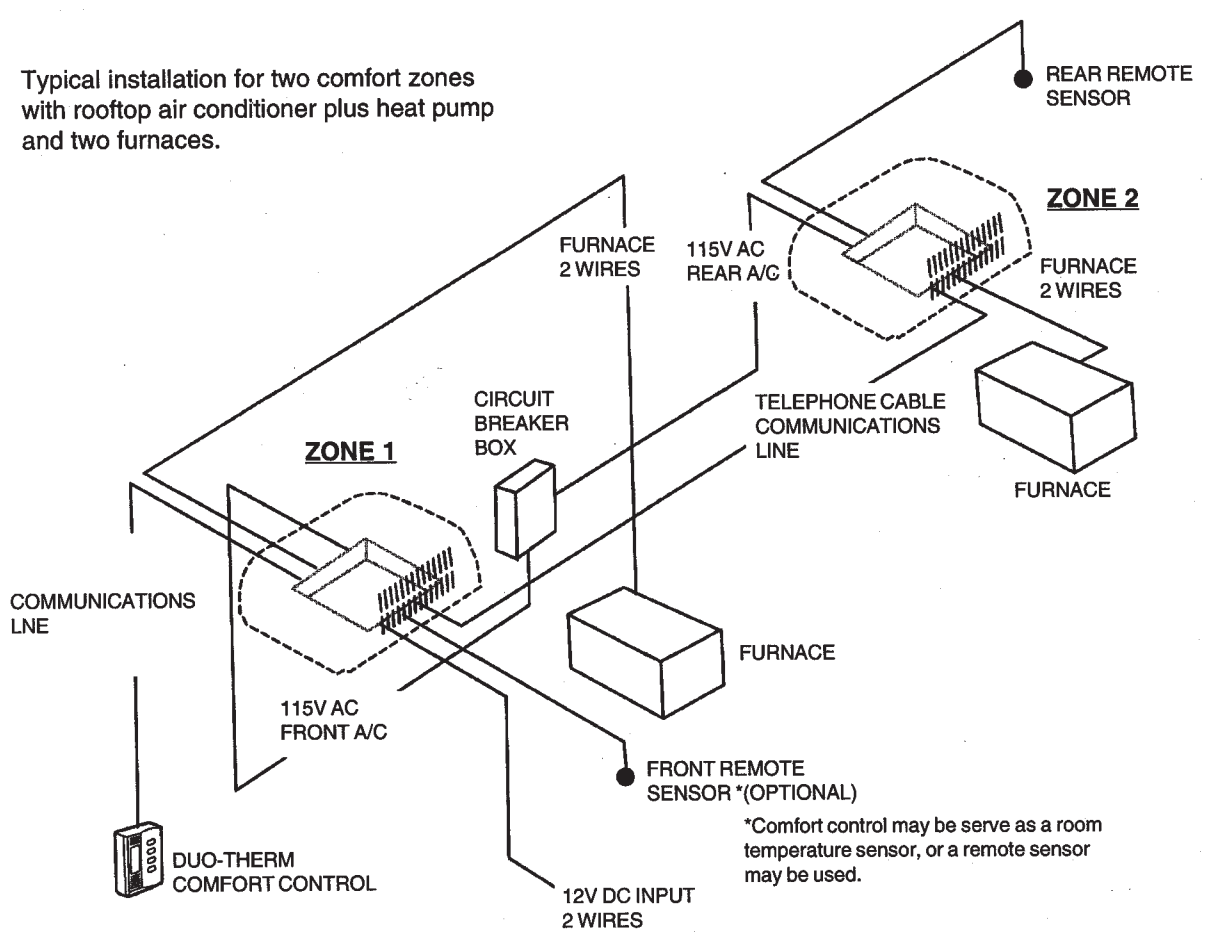


**3. Three Comfort Zones**

To configure three units, ZONES need to be established. Refer to Section 2.3A and 2.3B for Zone 1 and Zone 2 configuration.

115 V AC must be to ZONE 3 unit. A communication line must be between ZONE 2 and ZONE 3 units.

Configure ZONE 3 unit the same as other **like** units, **EXCEPT** for the Dip switches. Dip switch 4 (ZONE 3) to ON position, and all other Dip switches to OFF position.

**4. Four Comfort Zones**

To configure three units, ZONES need to be established. Refer to Section 2.3A, 2.3B and 2.3C for Zone 1, Zone 2 and Zone 3 configuration.

115 V AC must be to ZONE 4 unit. A communication line must be between ZONE 3 and ZONE 4 units.

Configure ZONE 4 unit the same as other **like** units, **EXCEPT** for the Dip switches. Dip switch 3 (ZONE 4) to ON position, and all other Dip switches to OFF position.

# Section E - Symptom/Cause Chart

## DUO-THERM ROOF MOUNTED HEAT PUMPS

This program will address the most common system problems associated with the Duo-Therm Heat Pumps supplied by The Dometic Corporation. Our intent is to provide you with a guideline of checks to make, should you encounter one of the following symptoms.

| SYMPTOMS | CAUSE | REFER TO | PAGE |
|---|---|---|---|
| **1. Unit does not run; no fan, no compressor (Cool or Heat mode)** | | | |
| Mechanical Controls | Operation | B2a | 24 |
| | Ambient Temperature | C22a | 59 |
| | AC Voltage | A1 | 1 |
| | Breaker | A4 | 2 |
| | Changeover Thermostat | C10 | 32 |
| | Selector Switch | C9 | 31 |
| | Wiring | A3, C21 | 1, 58 |
| Bimetal Control System | Operation | B2b | 24 |
| | Ambient Temperature | C22a | 59 |
| | AC Voltage | A1 | 1 |
| | DC Voltage | A2 | 1 |
| | Breaker | A4 | 2 |
| | Changeover Thermostat | C10 | 32 |
| | Wiring | A3, C21 | 1, 58 |
| | Bimetal Thermostat | C18b | 42 |
| | Relay | C16 | 35 |
| | Relay Board | C17a | 38 |
| | Cable Assembly | C19 | 52 |
| Analog Control System | Operation | B1c | 15 |
| | Ambient Temperature | C22a | 59 |
| | AC Volts | A1 | 1 |
| | DC Volts | A2 | 1 |
| | Fuse | C15 | 34 |
| | Breaker | A4 | 2 |
| | Changeover Thermostat | C10 | 32 |
| | Analog Thermostat | C18c | 50 |
| | Analog Control Box | C17b | 39 |
| | Wiring | A3, C21 | 1, 58 |
| Comfort Control Center | Configuration | D | 60 |
| | Operation | B2d | 26 |
| | Ambient Temperature | C22a | 59 |
| | AC Voltage | A1 | 1 |
| | DC Voltage | A2 | 1 |
| | Breaker | A4 | 2 |
| | Fuse | C15 | 34 |
| | Cable Assembly | C19 | 52 |
| | Ambient Sensor | C12 | 33 |
| | Comfort Control Center | C18d | 52 |
| | AC Power Module Board | C17d | 40 |

## DUO-THERM ROOF MOUNTED HEAT PUMPS...*Continued*

| SYMPTOMS | CAUSE | REFER TO | PAGE |
|---|---|---|---|
| **2. Fan operated; compressor will not come on (does not "hum). (Cool or Heat Mode)** | | | |
| Mechanical Controls | Wiring | A3, C21 | 1, 58 |
| | Selector Switch | C9b | 31 |
| | Mechanical Thermostat | C18a | 42 |
| | Overload | C6 | 30 |
| | Compressor | C5 | 29 |
| Bimetal Control System | Operation | B2b | 24 |
| | Wiring | A3, C21 | 1, 58 |
| | Cable Assembly | C19 | 52 |
| | Bimetal Thermostat | C18a | 42 |
| | Relays | C16 | 35 |
| | Relay Board | C17a | 38 |
| | Overload | C6 | 30 |
| | Compressor | C5 | 29 |
| Analog Control System | Operation | B2c | 25 |
| | Wiring | A3. C21 | 1, 58 |
| | Fuse | C15 | 34 |
| | Breaker | A4 | 2 |
| | Analog Thermostat | C18d | 50 |
| | Analog Control Box | C17b | 39 |
| | Overload Protector | C6 | 30 |
| | Compressor | C5 | 29 |
| Comfort Control Center System | Operation | B2d | 26 |
| | Cable Assembly | C19 | 52 |
| | AC Power Module Board | C17d | 40 |
| | Comfort Control Center | C18d | 52 |
| | Overload | C6 | 30 |
| | Compressor | C5 | 29 |
| **3. Fan Operates; compressor tries to start, cycles "OFF" and hums again, or blows circuit breaker. (Cool or Heat Mode)** | | | |
| Mechanical Controls | AC Voltage | A1 | 1 |
| | PTCR or Start Relay | C4` | 29 |
| | Start Capacitor | C3 | 28 |
| | Fan/Run Capacitor | C2 | 28 |
| | Overload | C6 | 30 |
| | Compressor | C5 | 29 |

## DUO-THERM ROOF MOUNTED HEAT PUMPS...*Continued*

| SYMPTOMS | CAUSE | REFER TO | PAGE |
|---|---|---|---|
| **Fan Operates; compressor tries to start, cycles "OFF" and hums again, or blows circuit breaker (Cool or Heat Mode)... Cont'd** | | | |
| Bimetal Controls | AC Voltage | A1 | 1 |
| | PTCR or Start Relay | C4` | 29 |
| | Start Capacitor | C3 | 28 |
| | Fan/Run Capacitor | C2 | 28 |
| | Overload | C6 | 30 |
| | Compressor | C5 | 29 |
| Analog Controls | AC Voltage | A1 | 1 |
| | PTCR or Start Relay | C4` | 29 |
| | Start Capacitor | C3 | 28 |
| | Fan/Run Capacitor | C2 | 28 |
| | Overload | C6 | 30 |
| | Compressor | C5 | 29 |
| Comfort Control Center System | AC Voltage | A1 | 1 |
| | PTCR or Start Relay | C4` | 29 |
| | Start Capacitor | C3 | 28 |
| | Fan/Run Capacitor | C2 | 28 |
| | Overload | C6 | 30 |
| | Compressor | C5 | 29 |
| **4. Fan operates; compressor runs for a short while, cycles off, cycles back on hums, blows circuit breaker or does not run. (Cool or Heat Mode)** | | | |
| Mechanical Controls | Operation | B2a | 24 |
| | AC Voltage | A1 | 1 |
| | PTCR or Start Relay | C4 | 29 |
| | Start Capacitor | C2 | 28 |
| | Fan/Run Capacitor | C2 | 28 |
| | Mechanical Thermostat | C18a | 42 |
| | Short Cycle | C22i | 59 |
| | Air Flow Obstruction | C22j | 60 |
| | Motor | C5 | 27 |
| | Overload | C6 | 30 |
| | Compressor | C5 | 29 |
| | Sealed System | C20 | 55 |

## DUO-THERM ROOF MOUNTED HEAT PUMPS...*Continued*

| SYMPTOMS | CAUSE | REFER TO | PAGE |
|---|---|---|---|
| **Fan operates; compressor runs for a short while, cycles off, cycles back on hums, blows circuit breaker or does not run. (Cool or Heat Mode)** | | | |
| Bimetal Thermostat Control System | Operation | B2b | 24 |
| | AC Voltage | A1 | 1 |
| | PTCR or Start Relay | C4 | 29 |
| | Start Capacitor | C2 | 28 |
| | Fan/Run Capacitor | C2 | 28 |
| | Thermostat Location | A7 | 12 |
| | Bimetal Thermostat | C18a | 42 |
| | Short Cycle | C22i | 59 |
| | Air Flow Obstruction | C22j | 60 |
| | Motor | C5 | 27 |
| | Overload | C6 | 30 |
| | Compressor | C5 | 29 |
| | Sealed System | C20 | 55 |
| Analog Control System | Operation | B2a | 24 |
| | AC Voltage | A1 | 1 |
| | PTCR or Start Relay | C4 | 29 |
| | Start Capacitor | C2 | 28 |
| | Fan/Run Capacitor | C2 | 28 |
| | Thermostat Location | A7 | 12 |
| | Analog Thermostat | C18d | 50 |
| | Short Cycle | C22i | 59 |
| | Air Flow Obstruction | C22j | 60 |
| | Motor | C5 | 27 |
| | Overload | C6 | 30 |
| | Compressor | C5 | 29 |
| | Sealed System | C20 | 55 |
| Comfort Control Center System | Operation | B2a | 24 |
| | AC Voltage | A1 | 1 |
| | PTCR or Start Relay | C4 | 29 |
| | Start Capacitor | C2 | 28 |
| | Fan/Run Capacitor | C2 | 28 |
| | Thermostat Location | A7 | 12 |
| | Comfort Control Center | C18d | 52 |
| | Short Cycle | C22i | 59 |
| | Air Flow Obstruction | C22j | 60 |
| | Motor | C5 | 27 |
| | Overload | C6 | 30 |
| | Compressor | C5 | 29 |
| | Sealed System | C20 | 55 |

## DUO-THERM ROOF MOUNTED HEAT PUMPS...*Continued*

| SYMPTOMS | CAUSE | REFER TO | PAGE |
|---|---|---|---|
| **5. Compressor runs, no fan (Cool or Heat Mode)** | | | |
| Mechanical Controls | Wiring | C21 | 58 |
| | Selector Switch | C9 | 31 |
| | Fan/Run Capacitor | C3 | 28 |
| | Motor | C5 | 27 |
| Bimetal Control System | Wiring | C21 | 58 |
| | Fan/Run Capacitor | C2 | 28 |
| | Motor | C1 | 27 |
| | Bimetal Thermostat | C18b | 42 |
| | Cable Assembly | C19 | 52 |
| | Relay | C16 | 35 |
| | Printed Circuit Board | C17a | 38 |
| Analog Control System | Wiring | C21 | 58 |
| | Fan/Run Capacitor | C2 | 28 |
| | Motor | C1 | 27 |
| | Analog Thermostat | C18c | 50 |
| | Cable Assembly | C19 | 52 |
| | Relay | C16 | 35 |
| | Printed Circuit Board | C17b | 39 |
| Comfort Control Center System | Wiring | C21 | 58 |
| | Fan/Run Capacitor | C2 | 28 |
| | Motor | C1 | 27 |
| | Thermostat | C18d | 52 |
| | Cable Assembly | C19 | 52 |
| | Printed Circuit Board | C17a | 38 |
| **6. Compressor runs, fan runs, but on one speed only. (Cool or Heat Mode)** | | | |
| Mechanical Controls | Selector Switch | C9 | 31 |
| | Wiring | C21 | 58 |
| | Motor | C1 | 27 |
| Bimetal Control System | Wiring | C21 | 58 |
| | Fan/Run Capacitor | C2 | 28 |
| | Motor | C1 | 27 |
| | Cable Assembly | C19 | 52 |
| | Bimetal Thermostat | C18b | 42 |
| | Relay | C16 | 35 |
| | Printed Circuit Board | C17b | 39 |

## DUO-THERM ROOF MOUNTED HEAT PUMPS...*Continued*

| SYMPTOMS | CAUSE | REFER TO | PAGE |
|---|---|---|---|
| **Compressor runs, fan runs, but on one speed only. (Cool or Heat Mode)** | | | |
| Analog Control System | Wiring | C21 | 58 |
| | Fan/Run Capacitor | C2 | 28 |
| | Motor | C1 | 27 |
| | Cable Assembly | C19 | 52 |
| | Analog Thermostat | C18b | 42 |
| | Relay | C16 | 35 |
| | Analog Control Box | C17b | 39 |
| Comfort Control Center System | Wiring | C21 | 58 |
| | Fan/Run Capacitor | C2 | 28 |
| | Motor | C1 | 27 |
| | Cable Assembly | C19 | 52 |
| | Comfort Control Center | C18d | 52 |
| | AC Power Module Board | C17c | 40 |
| **7. Inside Coil Freezes up (Air Distribution Box) (Cool Mode)** | | | |
| Mechanical Controls | Ambient Temperature | C22a | 59 |
| | Air Flow Obstruction | C22j | 60 |
| | Low Refrigerant Charge | C20c | 57 |
| | Capillary Tube Blockage | C20a | 55 |
| | Mechanical Thermostat | C18a | 42 |
| | Fan/Run Capacitor | C2 | 28 |
| | Motor | C1 | 27 |
| Bimetal Control System | Ambient Temperature | C22a | 59 |
| | Air Flow Obstruction | C22j | 60 |
| | Thermostat Location | A7 | 12 |
| | Low Refrigerant Charge | C20c | 57 |
| | Capillary Tube Blockage | C20a | 55 |
| | Bimetal Thermostat | C18b | 42 |
| | Cable Assembly | C19 | 52 |
| | Fan/Run Capacitor | C2 | 28 |
| | Motor | C1 | 27 |
| Analog Control System | Ambient Temperature | C22a | 59 |
| | Air Flow Obstruction | C22j | 60 |
| | Thermostat Location | A7 | 12 |
| | Low Refrigerant Charge | C20c | 57 |
| | Capillary Tube Blockage | C20a | 55 |
| | Cable Assembly | C19 | 52 |
| | Fan/Run Capacitor | C2 | 28 |
| | Motor | C1 | 27 |
| | Analog Thermostat | C18c | 50 |
| | Analog Control Box | C17b | 39 |

## DUO-THERM ROOF MOUNTED HEAT PUMPS...*Continued*

| SYMPTOMS | CAUSE | REFER TO | PAGE |
|---|---|---|---|
| **Inside Coil Freezes up (Air Distribution Box) (Cool Mode)...cont'd** | | | |
| Comfort Control Center System | Ambient Temperature | C22a | 59 |
| | Air Flow Obstruction | C22j | 60 |
| | Thermostat Location | A7 | 12 |
| | Low Refrigerant Charge | C20c | 57 |
| | Capillary Tube Blockage | C20a | 55 |
| | Cable Assembly | C19 | 52 |
| | Fan/Run Capacitor | C2 | 28 |
| | Motor | C1 | 27 |
| | Comfort Control Center | C18d | 52 |
| | AC Power Module Board | C17c | 40 |
| **8. Inside Coil Freezes up (Duct in Ceiling) (Cool Mode)** | | | |
| Bimetal Control System | Ambient Temperature | C22a | 59 |
| | Ducting System | A6a | 2 |
| | Air Flow Obstruction | C22j | 60 |
| | Heat Gain/Heat Loss | C22b | 59 |
| | Thermostat Location | A7 | 12 |
| | Cable Assembly | C19 | 52 |
| | Fan/Run Capacitor | C2 | 28 |
| | Motor | C1 | 27 |
| | Low Refrigerant Charge | C20c | 57 |
| | Capillary Tube Blockage | C20a | 55 |
| | Bimetal Thermostat | C18b | 42 |
| | Relay | C16 | 35 |
| | Printed Circuit Board | C17a | 38 |
| Analog Control System | Ambient Temperature | C22a | 59 |
| | Ducting System | A6a | 2 |
| | Air Flow Obstruction | C22j | 60 |
| | Heat Gain/Heat Loss | C22b | 59 |
| | Thermostat Location | A7 | 12 |
| | Cable Assembly | C19 | 52 |
| | Fan/Run Capacitor | C2 | 28 |
| | Motor | C1 | 27 |
| | Low Refrigerant Charge | C20c | 57 |
| | Capillary Tube Blockage | C20a | 55 |
| | Analog Thermostat | C18c | 50 |
| | Analog Control Box | C17b | 39 |

## DUO-THERM ROOF MOUNTED HEAT PUMPS...*Continued*

| SYMPTOMS | CAUSE | REFER TO | PAGE |
|---|---|---|---|
| **Inside Coil Freezes up (Duct in Ceiling) (Cool Mode)** | | | |
| Comfort Control Center System | Ambient Temperature | C22a | 59 |
| | Ducting System | A6a | 2 |
| | Air Flow Obstruction | C22j | 60 |
| | Heat Gain/Heat Loss | C22b | 59 |
| | Thermostat Location | A7 | 12 |
| | Cable Assembly | C19 | 52 |
| | Fan/Run Capacitor | C2 | 28 |
| | Motor | C1 | 27 |
| | Low Refrigerant Charge | C20c | 57 |
| | Capillary Tube Blockage | C20a | 55 |
| | Comfort Control Center | C18d | 52 |
| | AC Power Module Board | C17c | 40 |
| **9. Insufficient cooling or heating; compressor runs constantly (Air Distribution Box)** | | | |
| Bimetal Control System | Air Flow Obstruction | C22j | 60 |
| | Heat Gain/Heat Loss | C22b | 59 |
| | Sealed System | C20 | 55 |
| | Compressor | C5 | 29 |
| Analog Control System | Air Flow Obstruction | C22j | 60 |
| | Heat Gain/Heat Loss | C22b | 59 |
| | Sealed System | C20 | 55 |
| | Compressor | C5 | 29 |
| Comfort Control Center System | Air Flow Obstruction | C22j | 60 |
| | Heat Gain/Heat Loss | C22b | 59 |
| | Sealed System | C20 | 55 |
| | Compressor | C5 | 29 |
| **10. Insufficient cooling or heating compressor runs constantly... (Ducts in ceiling)** | | | |
| Bimetal Control System | Air Flow Obstruction | C22j | 60 |
| | Ducting System | A6a | 2 |
| | Heat Gain/Heat Loss | C22b | 59 |
| | Sealed System | C20 | 55 |
| | Compressor | C5 | 29 |

## DUO-THERM ROOF MOUNTED HEAT PUMPS...*Continued*

| SYMPTOMS | CAUSE | REFER TO | PAGE |
|---|---|---|---|
| **Insufficient cooling or heating compressor runs constantly... (Ducts in ceiling)** | | | |
| Analog Control System | Air Flow Obstruction | C22j | 60 |
| | Ducting System | A6a | 2 |
| | Heat Gain/Heat Loss | C22b | 59 |
| | Sealed System | C20 | 55 |
| | Compressor | C5 | 29 |
| Comfort Control Center System | Air Flow Obstruction | C22j | 60 |
| | Ducting System | A6a | 2 |
| | Heat Gain/Heat Loss | C22b | 59 |
| | Sealed System | C20 | 55 |
| | Compressor | C5 | 29 |
| **11. Unit operates in wrong mode (cool Instead of heat or reversed)** | | | |
| Mechanical Control | Operation | B2a | 24 |
| | Mechanical Thermostat | C18a | 42 |
| | Changeover Thermostat | C10 | 32 |
| | Relay, Double Throw | C16k | 37 |
| | Wiring | C21 | 58 |
| | Reversing Valve | C13 | 34 |
| Bimetal Control System | Operation | B2a | 24 |
| | Bimetal Thermostat | C18a | 42 |
| | Changeover Thermostat | C10 | 32 |
| | Relay | C16k | 37 |
| | Wiring | C21 | 58 |
| | Reversing Valve | C13 | 34 |
| Analog Control System | Operation | B2a | 24 |
| | Analog Thermostat | C18a | 42 |
| | Changeover Thermostat | C10 | 32 |
| | Relay | C16k | 37 |
| | Wiring | C21 | 58 |
| | Reversing Valve | C13 | 34 |
| Comfort Control Center System | Operation | B2a | 24 |
| | Configuration | D | 60 |
| | Ambient Sensor | C12 | 33 |
| | Wiring | C21 | 58 |
| | Reversing Valve | C13 | 34 |
| | Comfort Control Center | C18d | 52 |

## DUO-THERM ROOF MOUNTED HEAT PUMPS...*Continued*

| SYMPTOMS | CAUSE | REFER TO | PAGE |
|---|---|---|---|
| **12. Insufficient cooling or heating; compressor cycles off and on...(Air Distribution Box)** | | | |
| Mechanical Controls | ADB Installation | A5 | 2 |
| | Operation | B2a | 24 |
| | Heat Gain/Heat Loss | C22b | 59 |
| | Air flow Obstruction | C22j | 60 |
| | Mechanical Thermostat | C18a | 42 |
| Bimetal Control System | ADB Installation | A5 | 2 |
| | Operation | B2b | 24 |
| | Heat Gain/Heat Loss | C22b | 59 |
| | Thermostat Location | A7 | 12 |
| | Air flow Obstruction | C22j | 60 |
| | Bimetal Thermostat | C18b | 42 |
| Analog Control System | ADB Installation | A5 | 2 |
| | Operation | B2c | 25 |
| | Heat Gain/Heat Loss | C22b | 59 |
| | Air flow Obstruction | C22j | 60 |
| | Thermostat Location | A7 | 12 |
| | Analog Thermostat | C18c | 50 |
| Comfort Control Center System | ADB Installation | A5 | 2 |
| | Operation | B2c | 25 |
| | Heat Gain/Heat Loss | C22b | 59 |
| | Air flow Obstruction | C22j | 60 |
| | Comfort Control Center | C18d | 52 |
| **13. Insufficient cooling or heating; compressor cycles off and on...(Duct in Ceiling)** | | | |
| Bimetal Control System | Operation | B2b | 24 |
| | Short Cycle | C22i | 59 |
| | Ducting System | A6a | 2 |
| | Heat Gain/Heat Loss | C22b | 59 |
| | Air flow Obstruction | C22j | 60 |
| | Thermostat Location | A7 | 12 |
| | Bimetal Thermostat | C18b | 42 |
| Analog Control System | Operation | B2c | 25 |
| | Short Cycle | C22i | 59 |
| | Ducting System | A6a | 2 |
| | Heat Gain/Heat Loss | C22b | 59 |
| | Air flow Obstruction | C22j | 60 |
| | Thermostat Location | A7 | 12 |
| | Analog Thermostat | C18c | 50 |

## DUO-THERM ROOF MOUNTED HEAT PUMPS...*Continued*

| SYMPTOMS | CAUSE | REFER TO | PAGE |
|---|---|---|---|
| **Insufficient cooling or heating; compressor cycles off and on...(Duct in Ceiling)...cont'd** | | | |
| Comfort Control Center System | Operation | B2d | 26 |
| | Short Cycle | C22i | 59 |
| | Ducting System | A6a | 2 |
| | Heat Gain/Heat Loss | C22b | 59 |
| | Air flow Obstruction | C22j | 60 |
| | Thermostat Location | A7 | 12 |
| | Comfort Control Center | C18d | 52 |
| **14. Insufficient cooling or heating with reduced air output...(Air Distribution Box)** | | | |
| Mechanical Controls | ADB Installation | A5 | 2 |
| | Air Flow Obstruction | C22j | 60 |
| | Blower Wheel | C22e | 59 |
| | Fan/Run Capacitor | C2 | 28 |
| | Motor | C1 | 27 |
| Bimetal Control System | ADB Installation | A5 | 2 |
| | Air Flow Obstruction | C22j | 60 |
| | Blower Wheel | C22e | 59 |
| | Fan/Run Capacitor | C2 | 28 |
| | Motor | C1 | 27 |
| Analog Control System | ADB Installation | A5 | 2 |
| | Air Flow Obstruction | C22j | 60 |
| | Blower Wheel | C22e | 59 |
| | Fan/Run Capacitor | C2 | 28 |
| | Motor | C1 | 27 |
| Comfort Control Center System | ADB Installation | A5 | 2 |
| | Air Flow Obstruction | C22j | 60 |
| | Blower Wheel | C22e | 59 |
| | Fan/Run Capacitor | C2 | 28 |
| | Motor | C1 | 27 |
| **15. Excessive cooling or heating; compressor will not shut off.** | | | |
| Mechanical Controls | Mechanical Thermostat | C18a | 42 |
| Bimetal Controls | Thermostat Location | A7 | 12 |
| | Bimetal Thermostat | C18b | 42 |
| | Cable Assembly | C19 | 52 |
| | Relay | C16 | 35 |
| | Bimetal Control Board | C17a | 38 |

## DUO-THERM ROOF MOUNTED HEAT PUMPS...*Continued*

| SYMPTOMS | CAUSE | REFER TO | PAGE |
|---|---|---|---|
| **Excessive cooling or heating; compressor will not shut off...cont'd** | | | |
| Analog Control System | Thermostat Location | A7 | 12 |
| | Analog Thermostat | C18c | 42 |
| | Cable Assembly | C19 | 52 |
| | Relay | C16 | 35 |
| | Analog Control Box | C17d | 39 |
| Comfort Control Center System | Thermostat Location | A7 | 12 |
| | Comfort Control Center | C18d | 52 |
| | Cable Assembly | C19 | 52 |
| | Remote Sensor | C11 | 32 |
| | AC Power Module Board | C17c | 40 |
| **14. Noisy operation. (Cooling or Heating Mode)** | | | |
| Mechanical Controls | Loose parts | C22c | 59 |
| | Fan Blade | C22e | 59 |
| | Tubing Vibration | C22d | 59 |
| | Reversing Valve | C13 | 34 |
| Bimetal Control System | Loose parts | C22c | 59 |
| | Fan Blade | C22e | 59 |
| | Tubing Vibration | C22d | 59 |
| | Reversing Valve | C13 | 34 |
| Analog Control System | Loose parts | C22c | 59 |
| | Fan Blade | C22e | 59 |
| | Tubing Vibration | C22d | 59 |
| | Reversing Valve | C13 | 34 |
| Comfort Control Center System | Loose parts | C22c | 59 |
| | Fan Blade | C22e | 59 |
| | Tubing Vibration | C22d | 59 |
| | Reversing Valve | C13 | 34 |
| **15. Water leaks into RV. (Cooling Mode)** | | | |
| Mechanical Controls | Installation | C22f | 59 |
| | Drain Pan | C22g | 59 |
| | Roof Gasket | C23 | 60 |
| Bimetal Control System | Installation | C22f | 59 |
| | Drain Pan | C22g | 59 |
| | Roof Gasket | C23 | 60 |

## DUO-THERM ROOF MOUNTED HEAT PUMPS...*Continued*

| SYMPTOMS | CAUSE | REFER TO | PAGE |
|---|---|---|---|
| **Water leaks into RV. (Cooling Mode)...cont'd** | | | |
| Analog Control System | Installation | C22f | 59 |
| | Drain Pan | C22g | 59 |
| | Roof Gasket | C23 | 60 |
| Comfort Control Center System | Installation | C22f | 59 |
| | Drain Pan | C22g | 59 |
| | Roof Gasket | C23 | 60 |
| **16. Turn to furnace; no furnace operation** | | | |
| Bimetal Control System | Operation | B2b | 24 |
| | Wiring | A3, C21 | 1, 58 |
| | DC Voltage | A2 | 1 |
| | Bimetal Thermostat | C18b | 42 |
| | Cable Assembly | C19 | 52 |
| | Changeover thermostat | C10 | 32 |
| Analog Control System | Operation | B2c | 25 |
| | Wiring | A3, C21 | 1, 58 |
| | DC Voltage | A2 | 1 |
| | Analog Thermostat | C18c | 50 |
| | Cable Assembly | C19 | 52 |
| | Changeover thermostat | C10 | 32 |
| Comfort Control Center System | Operation | B2b | 24 |
| | Wiring | A3, C21 | 1, 58 |
| | DC Voltage | A2 | 1 |
| | Comfort Control Center | C18d | 52 |
| | Cable Assembly | C19 | 52 |
| | Ambient Sensor | C12 | 33 |
| | AC Power Module Board | C17c | 40 |

## DUO-THERM BASEMENT HEAT PUMPS

This program will address the most common system problems associated with the Duo-Therm Heat Pumps supplied by The Dometic Corporation. Our intent is to provide you with a guideline of checks to make, should you encounter one of the following symptoms.

| SYMPTOMS | CAUSE | REFER TO | PAGE |
|---|---|---|---|
| **1. Unit does not run; no fan, no compressor** | | | |
| Bimetal Control System | Operation | B2b | 24 |
| | AC Voltage | A1 | 1 |
| | DC Voltage | A2 | 1 |
| | Breaker | A4 | 2 |
| | Wiring | A3, C21 | 1, 58 |
| | Transformer | C14 | 34 |
| | Changeover Thermostat | C10 | 32 |
| | Bimetal Thermostat | C18b | 42 |
| | Relay Board | C17a | 38 |
| | Cable Assembly | C19 | 52 |
| Analog Control System | Operation | B1c | 15 |
| | AC Volts | A1 | 1 |
| | DC Volts | A2 | 1 |
| | Fuse | C15 | 34 |
| | Breaker | A4 | 2 |
| | Changeover Thermostat | C10 | 32 |
| | Analog Thermostat | C18c | 50 |
| | Analog Control Box | C17b | 39 |
| | Wiring | A3, C21 | 1, 58 |
| Comfort Control Center System | Configuration | D | 60 |
| | Operation | B2d | 26 |
| | AC Voltage | A1 | 1 |
| | DC Voltage | A2 | 1 |
| | Breaker | A4 | 2 |
| | Fuse | C15 | 34 |
| | Cable Assembly | C19 | 52 |
| | Ambient Sensor | C12 | 33 |
| | Comfort Control Center | C18d | 52 |
| | AC Power Module Board | C17d | 40 |
| **2. Fan operates; compressor will not come on (does not "hum").** | | | |
| Bimetal Control System | Wiring | A3, C21 | 1, 58 |
| | Changeover Thermostat | C10 | 32 |
| | Cable Assembly | C19 | 52 |
| | Bimetal Thermostat | C18a | 42 |
| | Relays | C16 | 35 |
| | Relay Board | C17a | 38 |
| | Overload | C6 | 30 |
| | Compressor | C5 | 29 |

## DUO-THERM BASEMENT HEAT PUMPS...*Continued*

| SYMPTOMS | CAUSE | REFER TO | PAGE |
|---|---|---|---|
| **Fan operates; compressor will not come on (does not "hum")... Cont'd.** | | | |
| Analog Control System | Operation | B2d | 25 |
| | Overload protector | C6 | 30 |
| | Compressor | C5 | 29 |
| | Fuse | C15 | 34 |
| | Breaker | A4 | 2 |
| | Analog Thermostat | C18d | 50 |
| | Analog Control Box | C17b | 39 |
| | Wiring | A3, C21 | 1, 58 |
| Comfort Control Center System | Operation | B2d | 26 |
| | Cable Assembly | C19 | 52 |
| | Overload | C6 | 30 |
| | Compressor | C5 | 29 |
| | AC Power Module Board | C17d | 40 |
| | Comfort Control Center | C18d | 52 |
| **3. Fan Operates; compressor tries to start, cycles "OFF" and hums again, or blows circuit breaker.** | | | |
| Bimetal Controls | AC Voltage | A1 | 1 |
| | PTCR or Start Relay | C4` | 29 |
| | Start Capacitor | C3 | 28 |
| | Fan/Run Capacitor | C2 | 28 |
| | Overload | C6 | 30 |
| | Compressor | C5 | 29 |
| Analog Controls | AC Voltage | A1 | 1 |
| | PTCR or Start Relay | C4` | 29 |
| | Start Capacitor | C3 | 28 |
| | Fan/Run Capacitor | C2 | 28 |
| | Overload | C6 | 30 |
| | Compressor | C5 | 29 |
| Comfort Control Center System | AC Voltage | A1 | 1 |
| | PTCR or Start Relay | C4` | 29 |
| | Start Capacitor | C3 | 28 |
| | Fan/Run Capacitor | C2 | 28 |
| | Overload | C6 | 30 |
| | Compressor | C5 | 29 |

## DUO-THERM BASEMENT HEAT PUMPS...*Continued*

| SYMPTOMS | CAUSE | REFER TO | PAGE |
|---|---|---|---|
| **Fan operates; compressor will not come on (does not "hum").** | | | |
| Bimetal Control System | Operation | B2 | 24 |
| | Wiring | A3, C21 | 1, 58 |
| | Changeover Thermostat | C10 | 32 |
| | Cable Assembly | C19 | 52 |
| | Bimetal Thermostat | C18a | 42 |
| | Relays | C16 | 35 |
| | Relay Board | C17a | 38 |
| | Overload | C6 | 30 |
| | Compressor | C5 | 29 |
| Analog Control System | Operation | B2d | 25 |
| | Overload protector | C6 | 30 |
| | Compressor | C5 | 29 |
| | Fuse | C15 | 34 |
| | Breaker | A4 | 2 |
| | Wiring | A3, C21 | 1, 58 |
| | Analog Thermostat | C18d | 50 |
| | Analog Control Box | C17b | 39 |
| Comfort Control Center System | Operation | B2d | 26 |
| | Cable Assembly | C19 | 52 |
| | Wiring | A3, C21 | 1, 58 |
| | Overload | C6 | 30 |
| | Compressor | C5 | 29 |
| | AC Power Module Board | C17d | 40 |
| | Comfort Control Center | C18d | 52 |
| **3. Fan Operates; compressor tries to start, cycles "OFF" and hums again, or blows circuit breaker.** | | | |
| Bimetal Controls | AC Voltage | A1 | 1 |
| | PTCR or Start Relay | C4` | 29 |
| | Start Capacitor | C3 | 28 |
| | Fan/Run Capacitor | C2 | 28 |
| | Overload | C6 | 30 |
| | Compressor | C5 | 29 |
| Analog Controls | AC Voltage | A1 | 1 |
| | PTCR or Start Relay | C4` | 29 |
| | Start Capacitor | C3 | 28 |
| | Fan/Run Capacitor | C2 | 28 |
| | Overload | C6 | 30 |
| | Compressor | C5 | 29 |

## DUO-THERM BASEMENT HEAT PUMPS...*Continued*

| SYMPTOMS | CAUSE | REFER TO | PAGE |
|---|---|---|---|
| **Fan Operates; compressor tries to start, cycles "OFF" and hums again, or blows circuit breaker.** | | | |
| Comfort Control Center System | AC Voltage | A1 | 1 |
| | PTCR or Start Relay | C4` | 29 |
| | Start Capacitor | C3 | 28 |
| | Fan/Run Capacitor | C2 | 28 |
| | Overload | C6 | 30 |
| | Compressor | C5 | 29 |
| **4. Fan operates; compressor runs for a short while, cycles off, cycles back on hums, blows circuit breaker or does not run.** | | | |
| Bimetal Thermostat Control System | Operation | B2b | 24 |
| | AC Voltage | A1 | 1 |
| | PTCR or Start Relay | C4 | 29 |
| | Start Capacitor | C2 | 28 |
| | Fan/Run Capacitor | C2 | 28 |
| | Short Cycle | C22i | 59 |
| | Air Flow Obstruction | C22j | 60 |
| | Motor | C5 | 27 |
| | Overload | C6 | 30 |
| | Compressor | C5 | 29 |
| | Sealed System | C20 | 55 |
| Analog Control System | Operation | B2a | 24 |
| | AC Voltage | A1 | 1 |
| | PTCR or Start Relay | C4 | 29 |
| | Start Capacitor | C2 | 28 |
| | Fan/Run Capacitor | C2 | 28 |
| | Short Cycle | C22i | 59 |
| | Air Flow Obstruction | C22j | 60 |
| | Motor | C5 | 27 |
| | Overload | C6 | 30 |
| | Compressor | C5 | 29 |
| | Sealed System | C20 | 55 |
| Comfort Control Center System | Operation | B2a | 24 |
| | AC Voltage | A1 | 1 |
| | PTCR or Start Relay | C4 | 29 |
| | Start Capacitor | C2 | 28 |
| | Fan/Run Capacitor | C2 | 28 |
| | Short Cycle | C22i | 59 |
| | Air Flow Obstruction | C22j | 60 |
| | Motor | C5 | 27 |
| | Overload | C6 | 30 |
| | Compressor | C5 | 29 |
| | Sealed System | C20 | 55 |

## DUO-THERM BASEMENT HEAT PUMPS...*Continued*

| SYMPTOMS | CAUSE | REFER TO | PAGE |
|---|---|---|---|
| **5. Compressor runs, no fan** | | | |
| Bimetal Control System | Wiring | C21 | 58 |
| | Fan/Run Capacitor | C2 | 28 |
| | Motor | C1 | 27 |
| | Bimetal Thermostat | C18b | 42 |
| | Cable Assembly | C19 | 52 |
| | Relay | C16 | 35 |
| | Printed Circuit Board | C17a | 38 |
| Analog Control System | Wiring | C21 | 58 |
| | Fan/Run Capacitor | C2 | 28 |
| | Motor | C1 | 27 |
| | Analog Thermostat | C18c | 50 |
| | Cable Assembly | C19 | 52 |
| | Relay | C16 | 35 |
| | Printed Circuit Board | C17b | 39 |
| Comfort Control Center System | Wiring | C21 | 58 |
| | Fan/Run Capacitor | C2 | 28 |
| | Motor | C1 | 27 |
| | Thermostat | C18d | 52 |
| | Cable Assembly | C19 | 52 |
| | Printed Circuit Board | C17a | 38 |
| **6. Compressor runs, fan runs, but on one speed only.** | | | |
| Bimetal Control System | Wiring | C21 | 58 |
| | Fan/Run Capacitor | C2 | 28 |
| | Motor | C1 | 27 |
| | Cable Assembly | C19 | 52 |
| | Bimetal Thermostat | C18b | 42 |
| | Relay | C16 | 35 |
| | Printed Circuit Board | C17b | 39 |
| Analog Control System | Wiring | C21 | 58 |
| | Fan/Run Capacitor | C2 | 28 |
| | Motor | C1 | 27 |
| | Cable Assembly | C19 | 52 |
| | Analog Thermostat | C18b | 42 |
| | Relay | C16 | 35 |
| | Analog Control Box | C17b | 39 |
| | Comfort Control Center | C18d | 52 |
| | AC Power Module Board | C17c | 40 |

## DUO-THERM BASEMENT HEAT PUMPS...*Continued*

| SYMPTOMS | CAUSE | REFER TO | PAGE |
|---|---|---|---|
| **7. Inside Coil Freezes up** | | | |
| Bimetal Control System | Ambient Temperature | C22a | 59 |
| | Ducting System | A6a | 2 |
| | Air Flow Obstruction | C22j | 60 |
| | Heat Gain/Heat Loss | C22b | 59 |
| | Thermostat Location | A7 | 12 |
| | Cable Assembly | C19 | 52 |
| | Fan/Run Capacitor | C2 | 28 |
| | Motor | C1 | 27 |
| | Low Refrigerant Charge | C20c | 57 |
| | Capillary Tube Blockage | C20a | 55 |
| | Bimetal Thermostat | C18b | 42 |
| | Relay | C16 | 35 |
| | Printed Circuit Board | C17a | 38 |
| Analog Control System | Ambient Temperature | C22a | 59 |
| | Ducting System | A6a | 2 |
| | Air Flow Obstruction | C22j | 60 |
| | Heat Gain/Heat Loss | C22b | 59 |
| | Thermostat Location | A7 | 12 |
| | Cable Assembly | C19 | 52 |
| | Fan/Run Capacitor | C2 | 28 |
| | Motor | C1 | 27 |
| | Low Refrigerant Charge | C20c | 57 |
| | Capillary Tube Blockage | C20a | 55 |
| | Analog Thermostat | C18c | 50 |
| | Analog Control Box | C17b | 39 |
| Comfort Control Center System | Ambient Temperature | C22a | 59 |
| | Ducting System | A6a | 2 |
| | Air Flow Obstruction | C22j | 60 |
| | Heat Gain/Heat Loss | C22b | 59 |
| | Thermostat Location | A7 | 12 |
| | Cable Assembly | C19 | 52 |
| | Fan/Run Capacitor | C2 | 28 |
| | Motor | C1 | 27 |
| | Low Refrigerant Charge | C20c | 57 |
| | Capillary Tube Blockage | C20a | 55 |
| | Comfort Control Center | C18d | 52 |
| | AC Power Module Board | C17c | 40 |

## DUO-THERM BASEMENT HEAT PUMPS...*Continued*

| SYMPTOMS | CAUSE | REFER TO | PAGE |
|---|---|---|---|
| **8. Insufficient cooling or heating compressor runs constantly...** | | | |
| Bimetal Control System | Ducting System | A6a | 2 |
| | Heat Gain/Heat Loss | C22b | 59 |
| | Sealed System | C20 | 55 |
| | Compressor | C5 | 29 |
| Analog Control System | Ducting System | A6a | 2 |
| | Heat Gain/Heat Loss | C22b | 59 |
| | Sealed System | C20 | 55 |
| | Compressor | C5 | 29 |
| Comfort Control Center System | Ducting System | A6a | 2 |
| | Heat Gain/Heat Loss | C22b | 59 |
| | Sealed System | C20 | 55 |
| | Compressor | C5 | 29 |
| **9. Unit operates in wrong mode (cool Instead of heat or reversed)** | | | |
| Bimetal Control System | Operation | B2a | 24 |
| | Thermostat | C18a | 42 |
| | Changeover Thermostat | C10 | 32 |
| | Relay | C16k | 37 |
| | Wiring | C21 | 58 |
| | Reversing Valve | C13 | 34 |
| Analog Control System | Operation | B2a | 24 |
| | Thermostat | C18a | 42 |
| | Changeover Thermostat | C10 | 32 |
| | Relay | C16k | 37 |
| | Wiring | C21 | 58 |
| | Reversing Valve | C13 | 34 |
| Comfort Control Center System | Operation | B2a | 24 |
| | Ambient Sensor | C12 | 33 |
| | Wiring | C21 | 58 |
| | Reversing Valve | C13 | 34 |
| | Comfort Control Center | C18d | 52 |

## DUO-THERM BASEMENT HEAT PUMPS...*Continued*

| SYMPTOMS | CAUSE | REFER TO | PAGE |
|---|---|---|---|
| **10. Insufficient cooling or heating; compressor cycles off and on...** | | | |
| Bimetal Control System | Operation | B2b | 24 |
| | Short Cycle | C22i | 59 |
| | Ducting System | A6a | 2 |
| | Heat Gain/Heat Loss | C22b | 59 |
| | Air flow Obstruction | C22j | 60 |
| | Thermostat Location | A7 | 12 |
| | Bimetal Thermostat | C18b | 42 |
| **Insufficient cooling or heating; compressor cycles off and on...cont'd** | | | |
| Analog Control System | Operation | B2c | 25 |
| | Short Cycle | C22i | 59 |
| | Ducting System | A6a | 2 |
| | Heat Gain/Heat Loss | C22b | 59 |
| | Air flow Obstruction | C22j | 60 |
| | Thermostat Location | A7 | 12 |
| | Analog Thermostat | C18c | 50 |
| Comfort Control Center System | Operation | B2d | 26 |
| | Short Cycle | C22i | 59 |
| | Ducting System | A6a | 2 |
| | Heat Gain/Heat Loss | C22b | 59 |
| | Air flow Obstruction | C22j | 60 |
| | Thermostat Location | A7 | 12 |
| | Comfort Control Center | C18d | 52 |
| **11. Excessive cooling or heating; compressor will not shut off.** | | | |
| Bimetal Controls | Thermostat Location | A7 | 12 |
| | Bimetal Thermostat | C18b | 42 |
| | Cable Assembly | C19 | 52 |
| | Relay | C16 | 35 |
| | Bimetal Control Board | C17a | 38 |
| Analog Control System | Thermostat Location | A7 | 12 |
| | Analog Thermostat | C18c | 42 |
| | Cable Assembly | C19 | 52 |
| | Relay | C16 | 35 |
| | Analog Control Box | C17d | 39 |
| Comfort Control Center System | Thermostat Location | A7 | 12 |
| | Comfort Control Center | C18d | 52 |
| | Cable Assembly | C19 | 52 |
| | Remote Sensor | C11 | 32 |
| | AC Power Module Board | C17c | 40 |

## DUO-THERM BASEMENT HEAT PUMPS...*Continued*

| SYMPTOMS | CAUSE | REFER TO | PAGE |
|---|---|---|---|
| **12. Noisy operation. (Cool or Heat Mode)** | | | |
| Bimetal Control System | Loose parts | C22c | 59 |
| | Fan Blade | C22e | 59 |
| | Tubing Vibration | C22d | 59 |
| | Reversing Valve | C13 | 34 |
| Analog Control System | Loose parts | C22c | 59 |
| | Fan Blade | C22e | 59 |
| | Tubing Vibration | C22d | 59 |
| | Reversing Valve | C13 | 34 |
| Comfort Control Center System | Loose parts | C22c | 59 |
| | Fan Blade | C22e | 59 |
| | Tubing Vibration | C22d | 59 |
| | Reversing Valve | C13 | 34 |
| **13. Turn to furnace; no furnace operation** | | | |
| Bimetal Control System | Operation | B2b | 24 |
| | Wiring | A3, C21 | 1, 58 |
| | DC Voltage | A2 | 1 |
| | Bimetal Thermostat | C18b | 42 |
| | Cable Assembly | C19 | 52 |
| | Changeover thermostat | C10 | 32 |
| Analog Control System | Operation | B2c | 25 |
| | Wiring | A3, C21 | 1, 58 |
| | DC Voltage | A2 | 1 |
| | Analog Thermostat | C18c | 50 |
| | Cable Assembly | C19 | 52 |
| | Changeover thermostat | C10 | 32 |
| Comfort Control Center System | Operation | B2b | 24 |
| | Wiring | A3, C21 | 1, 58 |
| | DC Voltage | A2 | 1 |
| | Comfort Control Center | C18d | 52 |
| | Cable Assembly | C19 | 52 |
| | Ambient Sensor | C12 | 33 |
| | AC Power Module Board | C17c | 40 |

## DUO-THERM ROOF MOUNTED AIR CONDITIONERS

This program will address the most common system problems associated with the Duo-Therm Heat Pumps supplied by The Dometic Corporation. Our intent is to provide you with a guideline of checks to make, should you encounter one of the following symptoms.

| SYMPTOMS | CAUSE | REFER TO | PAGE |
|---|---|---|---|
| **1. Unit does not run; no fan, no compressor** | | | |
| Mechanical Controls | Operation | B2a | 24 |
| | Ambient Temperature | C22a | 59 |
| | AC Voltage | A1 | 1 |
| | Breaker | A4 | 2 |
| | Selector Switch | C9 | 31 |
| | Wiring | A3, C21 | 1, 58 |
| Bimetal Control System | Operation | B2b | 24 |
| | Ambient Temperature | C22a | 59 |
| | AC Voltage | A1 | 1 |
| | DC Voltage | A2 | 1 |
| | Breaker | A4 | 2 |
| | Wiring | A3, C21 | 1, 58 |
| | Bimetal Thermostat | C18b | 42 |
| | Relay | C16 | 35 |
| | Relay Board | C17a | 38 |
| | Cable Assembly | C19 | 52 |
| Analog Control System | Operation | B1c | 15 |
| | Ambient Temperature | C22a | 59 |
| | AC Volts | A1 | 1 |
| | DC Volts | A2 | 1 |
| | Fuse | C15 | 34 |
| | Breaker | A4 | 2 |
| | Analog Thermostat | C18c | 50 |
| | Analog Control Box | C17b | 39 |
| | Wiring | A3, C21 | 1, 58 |
| Comfort Control Center System | Configuration | D | 60 |
| | Operation | B2d | 26 |
| | Ambient Temperature | C22a | 59 |
| | AC Voltage | A1 | 1 |
| | DC Voltage | A2 | 1 |
| | Breaker | A4 | 2 |
| | Fuse | C15 | 34 |
| | Cable Assembly | C19 | 52 |
| | Comfort Control Center | C18d | 52 |
| | AC Power Module Board | C17d | 40 |

## DUO-THERM ROOF MOUNTED AIR CONDITIONERS...*Continued*

| SYMPTOMS | CAUSE | REFER TO | PAGE |
|---|---|---|---|
| **2. Fan operates; compressor will not come on (does not "hum").** | | | |
| Mechanical Controls | Wiring | A3, C21 | 1, 58 |
| | Selector Switch | C9b | 31 |
| | Mechanical Thermostat | C18a | 42 |
| | Overload | C6 | 30 |
| | Compressor | C5 | 29 |
| Bimetal Control System | Operation | B2b | 24 |
| | Wiring | A3, C21 | 1, 58 |
| | Cable Assembly | C19 | 52 |
| | Bimetal Thermostat | C18a | 42 |
| | Relays | C16 | 35 |
| | Relay Board | C17a | 38 |
| | Overload | C6 | 30 |
| | Compressor | C5 | 29 |
| Analog Control System | Operation | B2c | 25 |
| | Wiring | A3, C21 | 1, 58 |
| | Fuse | C15 | 34 |
| | Breaker | A4 | 2 |
| | Analog Thermostat | C18d | 50 |
| | Analog Control Box | C17b | 39 |
| | Overload protector | C6 | 30 |
| | Compressor | C5 | 29 |
| Comfort Control Center System | Operation | B2d | 26 |
| | Cable Assembly | C19 | 52 |
| | AC Power Module Board | C17d | 40 |
| | Comfort Control Center | C18d | 52 |
| | Overload | C6 | 30 |
| | Compressor | C5 | 29 |
| **3. Fan Operates; compressor tries to start, cycles "OFF" and hums again, or blows circuit breaker.** | | | |
| Mechanical Controls | AC Voltage | A1 | 1 |
| | PTCR or Start Relay | C4 | 29 |
| | Start Capacitor | C3 | 28 |
| | Fan/Run Capacitor | C2 | 28 |
| | Overload | C6 | 30 |
| | Compressor | C5 | 29 |

## DUO-THERM ROOF MOUNTED AIR CONDITIONERS...*Continued*

| SYMPTOMS | CAUSE | REFER TO | PAGE |
|---|---|---|---|
| **Fan Operates; compressor tries to start, cycles "OFF" and hums again, or blows circuit breaker (Cool or Heat Mode)... Cont'd** | | | |
| Bimetal Controls | AC Voltage | A1 | 1 |
| | PTCR or Start Relay | C4 | 29 |
| | Start Capacitor | C3 | 28 |
| | Fan/Run Capacitor | C2 | 28 |
| | Overload | C6 | 30 |
| | Compressor | C5 | 29 |
| Analog Controls | AC Voltage | A1 | 1 |
| | PTCR or Start Relay | C4 | 29 |
| | Start Capacitor | C3 | 28 |
| | Fan/Run Capacitor | C2 | 28 |
| | Overload | C6 | 30 |
| | Compressor | C5 | 29 |
| Comfort Control Center System | AC Voltage | A1 | 1 |
| | PTCR or Start Relay | C4 | 29 |
| | Start Capacitor | C3 | 28 |
| | Fan/Run Capacitor | C2 | 28 |
| | Overload | C6 | 30 |
| | Compressor | C5 | 29 |
| **4. Fan operates; compressor runs for a short while, cycles off, cycles back on hums, blows circuit breaker or does not run.** | | | |
| Mechanical Controls | Operation | B2a | 24 |
| | AC Voltage | A1 | 1 |
| | PTCR or Start Relay | C4 | 29 |
| | Start Capacitor | C2 | 28 |
| | Fan/Run Capacitor | C2 | 28 |
| | Mechanical Thermostat | C18a | 42 |
| | Short Cycle | C22i | 59 |
| | Air Flow Obstruction | C22j | 60 |
| | Motor | C5 | 27 |
| | Overload | C6 | 30 |
| | Compressor | C5 | 29 |
| | Sealed System | C20 | 55 |

## DUO-THERM ROOF MOUNTED AIR CONDITIONERS...*Continued*

| SYMPTOMS | CAUSE | REFER TO | PAGE |
|---|---|---|---|
| **Fan Operates; compressor tries to start, cycles "OFF" and hums again, or blows circuit breaker... Cont'd** | | | |
| Bimetal Controls | AC Voltage | A1 | 1 |
| | PTCR or Start Relay | C4 | 29 |
| | Start Capacitor | C3 | 28 |
| | Fan/Run Capacitor | C2 | 28 |
| | Overload | C6 | 30 |
| | Compressor | C5 | 29 |
| Analog Controls | AC Voltage | A1 | 1 |
| | PTCR or Start Relay | C4 | 29 |
| | Start Capacitor | C3 | 28 |
| | Fan/Run Capacitor | C2 | 28 |
| | Overload | C6 | 30 |
| | Compressor | C5 | 29 |
| Comfort Control Center System | AC Voltage | A1 | 1 |
| | PTCR or Start Relay | C4 | 29 |
| | Start Capacitor | C3 | 28 |
| | Fan/Run Capacitor | C2 | 28 |
| | Overload | C6 | 30 |
| | Compressor | C5 | 29 |
| **4. Fan operates; compressor runs for a short while, cycles off, cycles back on hums, blows circuit breaker or does not run. (Cool or Heat Mode)** | | | |
| Mechanical Controls | Operation | B2a | 24 |
| | AC Voltage | A1 | 1 |
| | PTCR or Start Relay | C4 | 29 |
| | Start Capacitor | C2 | 28 |
| | Fan/Run Capacitor | C2 | 28 |
| | Mechanical Thermostat | C18a | 42 |
| | Short Cycle | C22i | 59 |
| | Air Flow Obstruction | C22j | 60 |
| | Motor | C5 | 27 |
| | Overload | C6 | 30 |
| | Compressor | C5 | 29 |
| | Sealed System | C20 | |

## DUO-THERM ROOF MOUNTED AIR CONDITIONERS...*Continued*

| SYMPTOMS | CAUSE | REFER TO | PAGE |
|---|---|---|---|
| **Fan operates; compressor runs for a short while, cycles off, cycles back on hums, blows circuit breaker or does not run. (Cool or Heat Mode)** | | | |
| Bimetal Thermostat Control System | Operation | B2b | 24 |
| | AC Voltage | A1 | 1 |
| | PTCR or Start Relay | C4 | 29 |
| | Start Capacitor | C2 | 28 |
| | Fan/Run Capacitor | C2 | 28 |
| | Thermostat Location | A7 | 12 |
| | Bimetal Thermostat | C18a | 42 |
| | Short Cycle | C22i | 59 |
| | Air Flow Obstruction | C22j | 60 |
| | Motor | C5 | 27 |
| | Overload | C6 | 30 |
| | Compressor | C5 | 29 |
| | Sealed System | C20 | 55 |
| Analog Control System | Operation | B2a | 24 |
| | AC Voltage | A1 | 1 |
| | PTCR or Start Relay | C4 | 29 |
| | Start Capacitor | C2 | 28 |
| | Fan/Run Capacitor | C2 | 28 |
| | Thermostat Location | A7 | 12 |
| | Analog Thermostat | C18d | 50 |
| | Short Cycle | C22i | 59 |
| | Air Flow Obstruction | C22j | 60 |
| | Motor | C5 | 27 |
| | Overload | C6 | 30 |
| | Compressor | C5 | 29 |
| | Sealed System | C20 | 55 |
| Comfort Control Center System | Operation | B2a | 24 |
| | AC Voltage | A1 | 1 |
| | PTCR or Start Relay | C4 | 29 |
| | Start Capacitor | C2 | 28 |
| | Fan/Run Capacitor | C2 | 28 |
| | Thermostat Location | A7 | 12 |
| | Comfort Control Center | C18d | 52 |
| | Short Cycle | C22i | 59 |
| | Air Flow Obstruction | C22j | 60 |
| | Motor | C5 | 27 |
| | Overload | C6 | 30 |
| | Compressor | C5 | 29 |
| | Sealed System | C20 | 55 |

## DUO-THERM ROOF MOUNTED AIR CONDITIONERS...*Continued*

| SYMPTOMS | CAUSE | REFER TO | PAGE |
|---|---|---|---|
| **5. Compressor runs, no fan** | | | |
| Mechanical Controls | Wiring | C21 | 58 |
| | Selector Switch | C9 | 31 |
| | Fan/Run Capacitor | C3 | 28 |
| | Motor | C5 | 27 |
| Bimetal Control System | Wiring | C21 | 58 |
| | Fan/Run Capacitor | C2 | 28 |
| | Motor | C1 | 27 |
| | Bimetal Thermostat | C18b | 42 |
| | Cable Assembly | C19 | 52 |
| | Relay | C16 | 35 |
| | Printed Circuit Board | C17a | 38 |
| Analog Control System | Wiring | C21 | 58 |
| | Fan/Run Capacitor | C2 | 28 |
| | Motor | C1 | 27 |
| | Analog Thermostat | C18c | 50 |
| | Cable Assembly | C19 | 52 |
| | Relay | C16 | 35 |
| | Analog Control Box | C17b | 39 |
| Comfort Control Center System | Wiring | C21 | 58 |
| | Fan/Run Capacitor | C2 | 28 |
| | Motor | C1 | 27 |
| | Thermostat | C18d | 52 |
| | Cable Assembly | C19 | 52 |
| | AC Power Module Board | C17a | 38 |
| **6. Compressor runs, fan runs, but on one speed only.** | | | |
| Mechanical Controls | Selector Switch | C9 | 31 |
| | Wiring | C21 | 58 |
| | Motor | C1 | 27 |
| Bimetal Control System | Wiring | C21 | 58 |
| | Fan/Run Capacitor | C2 | 28 |
| | Motor | C1 | 27 |
| | Cable Assembly | C19 | 52 |
| | Bimetal Thermostat | C18b | 42 |
| | Relay | C16 | 35 |
| | Printed Circuit Board | C17b | 39 |

## DUO-THERM ROOF MOUNTED AIR CONDITIONERS...*Continued*

| SYMPTOMS | CAUSE | REFER TO | PAGE |
|---|---|---|---|
| **Compressor runs, fan runs, but on one speed only...cont'd** | | | |
| Analog Control System | Wiring | C21 | 58 |
| | Fan/Run Capacitor | C2 | 28 |
| | Motor | C1 | 27 |
| | Cable Assembly | C19 | 52 |
| | Analog Thermostat | C18b | 42 |
| | Relay | C16 | 35 |
| | Analog Control Box | C17b | 39 |
| Comfort Control Center System | Wiring | C21 | 58 |
| | Fan/Run Capacitor | C2 | 28 |
| | Motor | C1 | 27 |
| | Cable Assembly | C19 | 52 |
| | Comfort Control Center | C18d | 52 |
| | AC Power Module Board | C17c | 40 |
| **7. Inside Coil Freezes up (Air Distribution Box)** | | | |
| Mechanical Controls | Ambient Temperature | C22a | 59 |
| | Air Flow Obstruction | C22j | 60 |
| | Low Refrigerant Charge | C20c | 57 |
| | Capillary Tube Blockage | C20a | 55 |
| | Mechanical Thermostat | C18a | 42 |
| | Fan/Run Capacitor | C2 | 28 |
| | Motor | C1 | 27 |
| Bimetal Control System | Ambient Temperature | C22a | 59 |
| | Air Flow Obstruction | C22j | 60 |
| | Thermostat Location | A7 | 12 |
| | Low Refrigerant Charge | C20c | 57 |
| | Capillary Tube Blockage | C20a | 55 |
| | Bimetal Thermostat | C18b | 42 |
| | Cable Assembly | C19 | 52 |
| | Fan/Run Capacitor | C2 | 28 |
| | Motor | C1 | 27 |
| Analog Control System | Ambient Temperature | C22a | 59 |
| | Air Flow Obstruction | C22j | 60 |
| | Thermostat Location | A7 | 12 |
| | Low Refrigerant Charge | C20c | 57 |
| | Capillary Tube Blockage | C20a | 55 |
| | Cable Assembly | C19 | 52 |
| | Fan/Run Capacitor | C2 | 28 |
| | Motor | C1 | 27 |
| | Analog Thermostat | C18c | 50 |
| | Analog Control Box | C17b | 39 |

## DUO-THERM ROOF MOUNTED AIR CONDITIONERS...*Continued*

| SYMPTOMS | CAUSE | REFER TO | PAGE |
|---|---|---|---|
| **Inside Coil Freezes up (Air Distribution Box)...cont'd** | | | |
| Comfort Control Center System | Ambient Temperature | C22a | 59 |
| | Air Flow Obstruction | C22j | 60 |
| | Thermostat Location | A7 | 12 |
| | Low Refrigerant Charge | C20c | 57 |
| | Capillary Tube Blockage | C20a | 55 |
| | Cable Assembly | C19 | 52 |
| | Fan/Run Capacitor | C2 | 28 |
| | Motor | C1 | 27 |
| | Comfort Control Center | C18d | 52 |
| | AC Power Module Board | C17c | 40 |
| **8. Inside Coil Freezes up (Duct in Ceiling)** | | | |
| Bimetal Control System | Ambient Temperature | C22a | 59 |
| | Ducting System | A6a | 2 |
| | Air Flow Obstruction | C22j | 60 |
| | Cold Control | C7 | 30 |
| | Heat Gain/Heat Loss | C22b | 59 |
| | Thermostat Location | A7 | 12 |
| | Cable Assembly | C19 | 52 |
| | Fan/Run Capacitor | C2 | 28 |
| | Motor | C1 | 27 |
| | Low Refrigerant Charge | C20c | 57 |
| | Capillary Tube Blockage | C20a | 55 |
| | Bimetal Thermostat | C18b | 42 |
| | Relay | C16 | 35 |
| | Printed Circuit Board | C17a | 38 |
| Analog Control System | Ambient Temperature | C22a | 59 |
| | Ducting System | A6a | 2 |
| | Air Flow Obstruction | C22j | 60 |
| | Cold Control | C7 | 30 |
| | Heat Gain/Heat Loss | C22b | 59 |
| | Thermostat Location | A7 | 12 |
| | Cable Assembly | C19 | 52 |
| | Fan/Run Capacitor | C2 | 28 |
| | Motor | C1 | 27 |
| | Low Refrigerant Charge | C20c | 57 |
| | Capillary Tube Blockage | C20a | 55 |
| | Analog Thermostat | C18c | 50 |
| | Analog Control Box | C17b | 39 |

## DUO-THERM ROOF MOUNTED AIR CONDITIONERS...*Continued*

| SYMPTOMS | CAUSE | REFER TO | PAGE |
|---|---|---|---|
| **Inside Coil Freezes up (Duct in Ceiling)...cont'd** | | | |
| Comfort Control Center System | Ambient Temperature | C22a | 59 |
| | Ducting System | A6a | 2 |
| | Air Flow Obstruction | C22j | 60 |
| | Cold Control | C7 | 30 |
| | Heat Gain/Heat Loss | C22b | 59 |
| | Thermostat Location | A7 | 12 |
| | Cable Assembly | C19 | 52 |
| | Fan/Run Capacitor | C2 | 28 |
| | Motor | C1 | 27 |
| | Low Refrigerant Charge | C20c | 57 |
| | Capillary Tube Blockage | C20a | 55 |
| | Comfort Control Center | C18d | 52 |
| | AC Power Module Board | C17c | 40 |
| **9. Insufficient cooling or heating; compressor runs constantly (Air Distribution Box)** | | | |
| Bimetal Control System | Air Flow Obstruction | C22j | 60 |
| | Heat Gain/Heat Loss | C22b | 59 |
| | Sealed System | C20 | 55 |
| | Compressor | C5 | 29 |
| Analog Control System | Air Flow Obstruction | C22j | 60 |
| | Heat Gain/Heat Loss | C22b | 59 |
| | Sealed System | C20 | 55 |
| | Compressor | C5 | 29 |
| Comfort Control Center System | Air Flow Obstruction | C22j | 60 |
| | Heat Gain/Heat Loss | C22b | 59 |
| | Sealed System | C20 | 55 |
| | Compressor | C5 | 29 |
| **10. Insufficient cooling or heating compressor runs constantly. (Ducts in ceiling)** | | | |
| Bimetal Control System | Air Flow Obstruction | C22j | 60 |
| | Ducting System | A6a | 2 |
| | Heat Gain/Heat Loss | C22b | 59 |
| | Sealed System | C20 | 55 |
| | Compressor | C5 | 29 |

## DUO-THERM ROOF MOUNTED AIR CONDITIONERS...*Continued*

| SYMPTOMS | CAUSE | REFER TO | PAGE |
|---|---|---|---|
| **Insufficient cooling or heating compressor runs constantly. (Ducts in ceiling)...cont'd** | | | |
| Analog Control System | Air Flow Obstruction | C22j | 60 |
| | Ducting System | A6a | 2 |
| | Heat Gain/Heat Loss | C22b | 59 |
| | Sealed System | C20 | 55 |
| | Compressor | C5 | 29 |
| Comfort Control Center System | Air Flow Obstruction | C22j | 60 |
| | Ducting System | A6a | 2 |
| | Heat Gain/Heat Loss | C22b | 59 |
| | Sealed System | C20 | 55 |
| | Compressor | C5 | 29 |
| **11. Unit operates in wrong mode (cool Instead of heat or reversed)** | | | |
| Mechanical Control | Operation | B2a | 24 |
| | Mechanical Thermostat | C18a | 42 |
| | Changeover Thermostat | C10 | 32 |
| | Relay, Double Throw | C16k | 37 |
| | Wiring | C21 | 58 |
| | Reversing Valve | C13 | 34 |
| Bimetal Control System | Operation | B2a | 24 |
| | Bimetal Thermostat | C18a | 42 |
| | Changeover Thermostat | C10 | 32 |
| | Relay | C16k | 37 |
| | Wiring | C21 | 58 |
| | Reversing Valve | C13 | 34 |
| Analog Control System | Operation | B2a | 24 |
| | Analog Thermostat | C18a | 42 |
| | Changeover Thermostat | C10 | 32 |
| | Relay | C16k | 37 |
| | Wiring | C21 | 58 |
| | Reversing Valve | C13 | 34 |
| Comfort Control Center System | Operation | B2a | 24 |
| | Configuration | D | 60 |
| | Ambient Sensor | C12 | 33 |
| | Wiring | C21 | 58 |
| | Reversing Valve | C13 | 34 |
| | Comfort Control Center | C18d | 52 |

## DUO-THERM ROOF MOUNTED AIR CONDITIONERS...*Continued*

| SYMPTOMS | CAUSE | REFER TO | PAGE |
|---|---|---|---|
| **12. Insufficient cooling or heating; compressor cycles off and on...(Air Distribution Box)** | | | |
| Mechanical Controls | ADB Installation | A5 | 2 |
| | Operation | B2a | 24 |
| | Heat Gain/Heat Loss | C22b | 59 |
| | Air flow Obstruction | C22j | 60 |
| | Mechanical Thermostat | C18a | 42 |
| Bimetal Control System | ADB Installation | A5 | 2 |
| | Operation | B2b | 24 |
| | Heat Gain/Heat Loss | C22b | 59 |
| | Thermostat Location | A7 | 12 |
| | Air flow Obstruction | C22j | 60 |
| | Bimetal Thermostat | C18b | 42 |
| Analog Control System | ADB Installation | A5 | 2 |
| | Operation | B2c | 25 |
| | Heat Gain/Heat Loss | C22b | 59 |
| | Air flow Obstruction | C22j | 60 |
| | Thermostat Location | A7 | 12 |
| | Analog Thermostat | C18c | 50 |
| Comfort Control Center System | ADB Installation | A5 | 2 |
| | Operation | B2c | 25 |
| | Heat Gain/Heat Loss | C22b | 59 |
| | Air flow Obstruction | C22j | 60 |
| | Comfort Control Center | C18d | 52 |
| **13. Insufficient cooling or heating; compressor cycles off and on...(Duct in Ceiling)** | | | |
| Bimetal Control System | Operation | B2b | 24 |
| | Short Cycle | C22i | 59 |
| | Ducting System | A6a | 2 |
| | Heat Gain/Heat Loss | C22b | 59 |
| | Air flow Obstruction | C22j | 60 |
| | Thermostat Location | A7 | 12 |
| | Bimetal Thermostat | C18b | 42 |
| Analog Control System | Operation | B2c | 25 |
| | Short Cycle | C22i | 59 |
| | Ducting System | A6a | 2 |
| | Heat Gain/Heat Loss | C22b | 59 |
| | Air flow Obstruction | C22j | 60 |
| | Thermostat Location | A7 | 12 |
| | Analog Thermostat | C18c | 50 |

## DUO-THERM ROOF MOUNTED AIR CONDITIONERS...*Continued*

| SYMPTOMS | CAUSE | REFER TO | PAGE |
|---|---|---|---|
| **Insufficient cooling or heating; compressor cycles off and on...(Duct in Ceiling)...cont'd** | | | |
| Comfort Control Center System | Operation | B2d | 26 |
| | Short Cycle | C22i | 59 |
| | Ducting System | A6a | 2 |
| | Heat Gain/Heat Loss | C22b | 59 |
| | Air flow Obstruction | C22j | 60 |
| | Thermostat Location | A7 | 12 |
| | Comfort Control Center | C18d | 52 |
| **14. Noisy operation. (Cooling or Heating Mode)** | | | |
| Mechanical Controls | Loose parts | C22c | 59 |
| | Fan Blade | C22e | 59 |
| | Tubing Vibration | C22d | 59 |
| | Reversing Valve | C13 | 34 |
| Bimetal Control System | Loose parts | C22c | 59 |
| | Fan Blade | C22e | 59 |
| | Tubing Vibration | C22d | 59 |
| | Reversing Valve | C13 | 34 |
| Analog Control System | Loose parts | C22c | 59 |
| | Fan Blade | C22e | 59 |
| | Tubing Vibration | C22d | 59 |
| | Reversing Valve | C13 | 34 |
| Comfort Control Center System | Loose parts | C22c | 59 |
| | Fan Blade | C22e | 59 |
| | Tubing Vibration | C22d | 59 |
| | Reversing Valve | C13 | 34 |
| **15. Water leaks into RV. (Cooling Mode)** | | | |
| Mechanical Controls | Installation | C22f | 59 |
| | Drain Pan | C22g | 59 |
| | Roof Gasket | C23 | 60 |
| Bimetal Control System | Installation | C22f | 59 |
| | Drain Pan | C22g | 59 |
| | Roof Gasket | C23 | 60 |

## DUO-THERM ROOF MOUNTED AIR CONDITIONERS...*Continued*

| SYMPTOMS | CAUSE | REFER TO | PAGE |
|---|---|---|---|
| **Water leaks into RV...cont'd** | | | |
| Analog Control System | Installation | C22f | 59 |
| | Drain Pan | C22g | 59 |
| | Roof Gasket | C23 | 60 |
| Comfort Control Center System | Installation | C22f | 59 |
| | Drain Pan | C22g | 59 |
| | Roof Gasket | C23 | 60 |
| **16. Turn to furnace; no furnace operation** | | | |
| Bimetal Control System | Operation | B2b | 24 |
| | Wiring | A3, C21 | 1, 58 |
| | DC Voltage | A2 | 1 |
| | Bimetal Thermostat | C18b | 42 |
| | Cable Assembly | C19 | 52 |
| | Changeover thermostat | C10 | 32 |
| Analog Control System | Operation | B2c | 25 |
| | Wiring | A3, C21 | 1, 58 |
| | DC Voltage | A2 | 1 |
| | Analog Thermostat | C18c | 50 |
| | Cable Assembly | C19 | 52 |
| | Changeover thermostat | C10 | 32 |
| Comfort Control Center System | Operation | B2b | 24 |
| | Wiring | A3, C21 | 1, 58 |
| | DC Voltage | A2 | 1 |
| | Comfort Control Center | C18d | 52 |
| | Cable Assembly | C19 | 52 |
| | Ambient Sensor | C12 | 33 |
| | AC Power Module Board | C17c | 40 |
| **17. Turn to electric heat strip; no operation** | | | |
| Mechanical Controls | Operation | B1a | 14 |
| | Selector Switch | C9 | 31 |
| | Electric Heat Strip | C8 | 30 |
| | Wiring | A3, C21 | 1, 58 |
| Analog Control System | Operation | B1c | 15 |
| | Cable Assembly | C19 | 52 |
| | Wiring | A3, C21 | 1, 58 |
| | Analog Thermostat | C18c | 50 |
| | Analog Control Box | C17b | 39 |
| | Electric Heat Strip | C8 | 30 |

## DUO-THERM ROOF MOUNTED AIR CONDITIONERS...*Continued*

| SYMPTOMS | CAUSE | REFER TO | PAGE |
|---|---|---|---|
| **Turn to electric heat strip; no operation...cont'd** | | | |
| Comfort Control Center System | Configuration | D | 60 |
| | Operation | B1d | 16 |
| | Wiring | A3, C21 | 1, 58 |
| | Cable Assembly | C19 | 52 |
| | Comfort Control Center | C18d | 52 |
| | AC Power Module Board | C17c | 40 |

## DUO-THERM BASEMENT AIR CONDITIONERS

This program will address the most common system problems associated with the Duo-Therm Heat Pumps supplied by The Dometic Corporation. Our intent is to provide you with a guideline of checks to make, should you encounter one of the following symptoms.

| SYMPTOMS | CAUSE | REFER TO | PAGE |
|---|---|---|---|
| **1. Unit does not run; no fan, no compressor** | | | |
| Bimetal Control System | Operation | B2b | 24 |
| | AC Voltage | A1 | 1 |
| | DC Voltage | A2 | 1 |
| | Breaker | A4 | 2 |
| | Wiring | A3, C21 | 1, 58 |
| | Transformer | C14 | 34 |
| | Changeover Thermostat | C10 | 32 |
| | Bimetal Thermostat | C18b | 42 |
| | Relay Board | C17a | 38 |
| | Cable Assembly | C19 | 52 |
| Analog Control System | Operation | B1c | 15 |
| | AC Volts | A1 | 1 |
| | DC Volts | A2 | 1 |
| | Fuse | C15 | 34 |
| | Breaker | A4 | 2 |
| | Changeover Thermostat | C10 | 32 |
| | Analog Thermostat | C18c | 50 |
| | Analog Control Box | C17b | 39 |
| | Wiring | A3, C21 | 1, 58 |
| Comfort Control Center System | Configuration | D | 60 |
| | Operation | B2d | 26 |
| | AC Voltage | A1 | 1 |
| | DC Voltage | A2 | 1 |
| | Breaker | A4 | 2 |
| | Fuse | C15 | 34 |
| | Cable Assembly | C19 | 52 |
| | Ambient Sensor | C12 | 33 |
| | Comfort Control Center | C18d | 52 |
| | AC Power Module Board | C17d | 40 |
| **2. Fan operates; compressor will not come on (does not "hum").** | | | |
| Bimetal Control System | Wiring | A3, C21 | 1, 58 |
| | Changeover Thermostat | C10 | 32 |
| | Cable Assembly | C19 | 52 |
| | Bimetal Thermostat | C18a | 42 |
| | Relays | C16 | 35 |
| | Relay Board | C17a | 38 |
| | Overload | C6 | 30 |
| | Compressor | C5 | 29 |

## DUO-THERM BASEMENT AIR CONDITIONERS...*Continued*

| SYMPTOMS | CAUSE | REFER TO | PAGE |
|---|---|---|---|
| **Fan operates; compressor will not come on (does not "hum")... Cont'd.** | | | |
| Analog Control System | Operation | B2d | 25 |
| | Overload protector | C6 | 30 |
| | Compressor | C5 | 29 |
| | Fuse | C15 | 34 |
| | Breaker | A4 | 2 |
| | Analog Thermostat | C18d | 50 |
| | Analog Control Box | C17b | 39 |
| | Wiring | A3, C21 | 1, 58 |
| Comfort Control Center System | Operation | B2d | 26 |
| | Cable Assembly | C19 | 52 |
| | Overload | C6 | 30 |
| | Compressor | C5 | 29 |
| | AC Power Module Board | C17d | 40 |
| | Comfort Control Center | C18d | 52 |
| **3. Fan Operates; compressor tries to start, cycles "OFF" and hums again, or blows circuit breaker.** | | | |
| Bimetal Controls | AC Voltage | A1 | 1 |
| | PTCR or Start Relay | C4 | 29 |
| | Start Capacitor | C3 | 28 |
| | Fan/Run Capacitor | C2 | 28 |
| | Overload | C6 | 30 |
| | Compressor | C5 | 29 |
| Analog Controls | AC Voltage | A1 | 1 |
| | PTCR or Start Relay | C4 | 29 |
| | Start Capacitor | C3 | 28 |
| | Fan/Run Capacitor | C2 | 28 |
| | Overload | C6 | 30 |
| | Compressor | C5 | 29 |
| Comfort Control Center System | AC Voltage | A1 | 1 |
| | PTCR or Start Relay | C4 | 29 |
| | Start Capacitor | C3 | 28 |
| | Fan/Run Capacitor | C2 | 28 |
| | Overload | C6 | 30 |
| | Compressor | C5 | 29 |

## DUO-THERM BASEMENT AIR CONDITIONERS...*Continued*

| SYMPTOMS | CAUSE | REFER TO | PAGE |
|---|---|---|---|
| **Fan operates; compressor will not come on (does not "hum").** | | | |
| Bimetal Control System | Operation | B2 | 24 |
| | Wiring | A3, C21 | 1, 58 |
| | Changeover Thermostat | C10 | 32 |
| | Cable Assembly | C19 | 52 |
| | Bimetal Thermostat | C18a | 42 |
| | Relays | C16 | 35 |
| | Relay Board | C17a | 38 |
| | Overload | C6 | 30 |
| | Compressor | C5 | 29 |
| Analog Control System | Operation | B2d | 25 |
| | Overload protector | C6 | 30 |
| | Compressor | C5 | 29 |
| | Fuse | C15 | 34 |
| | Breaker | A4 | 2 |
| | Wiring | A3, C21 | 1, 58 |
| | Analog Thermostat | C18d | 50 |
| | Analog Control Box | C17b | 39 |
| Comfort Control Center System | Operation | B2d | 26 |
| | Cable Assembly | C19 | 52 |
| | Wiring | A3, C21 | 1, 58 |
| | Overload | C6 | 30 |
| | Compressor | C5 | 29 |
| | AC Power Module Board | C17d | 40 |
| | Comfort Control Center | C18d | 52 |
| **3. Fan Operates; compressor tries to start, cycles "OFF" and hums again, or blows circuit breaker.** | | | |
| Bimetal Controls | AC Voltage | A1 | 1 |
| | PTCR or Start Relay | C4 | 29 |
| | Start Capacitor | C3 | 28 |
| | Fan/Run Capacitor | C2 | 28 |
| | Overload | C6 | 30 |
| | Compressor | C5 | 29 |

## DUO-THERM BASEMENT AIR CONDITIONERS...*Continued*

| SYMPTOMS | CAUSE | REFER TO | PAGE |
|---|---|---|---|
| **Fan Operates; compressor tries to start, cycles "OFF" and hums again, or blows circuit breaker.** | | | |
| Comfort Control Center System | AC Voltage | A1 | 1 |
| | PTCR or Start Relay | C4 | 29 |
| | Start Capacitor | C3 | 28 |
| | Fan/Run Capacitor | C2 | 28 |
| | Overload | C6 | 30 |
| | Compressor | C5 | 29 |
| **4. Fan operates; compressor runs for a short while, cycles off, cycles back on hums, blows circuit breaker or does not run.** | | | |
| Bimetal Thermostat Control System | Operation | B2b | 24 |
| | AC Voltage | A1 | 1 |
| | PTCR or Start Relay | C4 | 29 |
| | Start Capacitor | C2 | 28 |
| | Fan/Run Capacitor | C2 | 28 |
| | Short Cycle | C22i | 59 |
| | Air Flow Obstruction | C22j | 60 |
| | Motor | C5 | 27 |
| | Overload | C6 | 30 |
| | Compressor | C5 | 29 |
| | Sealed System | C20 | 55 |
| Analog Control System | Operation | B2a | 24 |
| | AC Voltage | A1 | 1 |
| | PTCR or Start Relay | C4 | 29 |
| | Start Capacitor | C2 | 28 |
| | Fan/Run Capacitor | C2 | 28 |
| | Short Cycle | C22i | 59 |
| | Air Flow Obstruction | C22j | 60 |
| | Motor | C5 | 27 |
| | Overload | C6 | 30 |
| | Compressor | C5 | 29 |
| | Sealed System | C20 | 55 |
| Comfort Control Center System | Operation | B2a | 24 |
| | AC Voltage | A1 | 1 |
| | PTCR or Start Relay | C4 | 29 |
| | Start Capacitor | C2 | 28 |
| | Fan/Run Capacitor | C2 | 28 |
| | Short Cycle | C22i | 59 |
| | Air Flow Obstruction | C22j | 60 |
| | Motor | C5 | 27 |

## DUO-THERM BASEMENT AIR CONDITIONERS...*Continued*

| SYMPTOMS | CAUSE | REFER TO | PAGE |
|---|---|---|---|
| **5. Compressor runs, no fan** | | | |
| Bimetal Control System | Wiring | C21 | 58 |
| | Fan/Run Capacitor | C2 | 28 |
| | Motor | C1 | 27 |
| | Bimetal Thermostat | C18b | 42 |
| | Cable Assembly | C19 | 52 |
| | Relay | C16 | 35 |
| | Printed Circuit Board | C17a | 38 |
| Analog Control System | Wiring | C21 | 58 |
| | Fan/Run Capacitor | C2 | 28 |
| | Motor | C1 | 27 |
| | Analog Thermostat | C18c | 50 |
| | Cable Assembly | C19 | 52 |
| | Relay | C16 | 35 |
| | Printed Circuit Board | C17b | 39 |
| Comfort Control Center System | Wiring | C21 | 58 |
| | Fan/Run Capacitor | C2 | 28 |
| | Motor | C1 | 27 |
| | Thermostat | C18d | 52 |
| | Cable Assembly | C19 | 52 |
| | Printed Circuit Board | C17a | 38 |
| **6. Compressor runs, fan runs, but on one speed only.** | | | |
| Bimetal Control System | Wiring | C21 | 58 |
| | Fan/Run Capacitor | C2 | 28 |
| | Motor | C1 | 27 |
| | Cable Assembly | C19 | 52 |
| | Bimetal Thermostat | C18b | 42 |
| | Relay | C16 | 35 |
| | Printed Circuit Board | C17b | 39 |
| Analog Control System | Wiring | C21 | 58 |
| | Fan/Run Capacitor | C2 | 28 |
| | Motor | C1 | 27 |
| | Cable Assembly | C19 | 52 |
| | Analog Thermostat | C18b | 42 |
| | Relay | C16 | 35 |
| | Analog Control Box | C17b | 39 |

## DUO-THERM BASEMENT AIR CONDITIONERS...*Continued*

| SYMPTOMS | CAUSE | REFER TO | PAGE |
|---|---|---|---|
| **Compressor runs, fan runs, but on one speed only...cont'd** | | | |
| Comfort Control Center System | Wiring | C21 | 58 |
| | Fan/Run Capacitor | C2 | 28 |
| | Motor | C1 | 27 |
| | Cable Assembly | | |
| | Comfort Control Center | C18d | 52 |
| | AC Power Module Board | C17c | 40 |
| **7. Inside Coil Freezes up** | | | |
| Bimetal Control System | Ambient Temperature | C22a | 59 |
| | Ducting System | A6a | 2 |
| | Air Flow Obstruction | C22j | 60 |
| | Heat Gain/Heat Loss | C22b | 59 |
| | Thermostat Location | A7 | 12 |
| | Cable Assembly | C19 | 52 |
| | Fan/Run Capacitor | C2 | 28 |
| | Motor | C1 | 27 |
| | Low Refrigerant Charge | C20c | 57 |
| | Capillary Tube Blockage | C20a | 55 |
| | Bimetal Thermostat | C18b | 42 |
| | Relay | C16 | 35 |
| | Printed Circuit Board | C17a | 38 |
| Analog Control System | Ambient Temperature | C22a | 59 |
| | Ducting System | A6a | 2 |
| | Air Flow Obstruction | C22j | 60 |
| | Heat Gain/Heat Loss | C22b | 59 |
| | Thermostat Location | A7 | 12 |
| | Cable Assembly | C19 | 52 |
| | Fan/Run Capacitor | C2 | 28 |
| | Motor | C1 | 27 |
| | Low Refrigerant Charge | C20c | 57 |
| | Capillary Tube Blockage | C20a | 55 |
| | Analog Thermostat | C18c | 50 |
| | Analog Control Box | C17b | 39 |
| Comfort Control Center System | Ambient Temperature | C22a | 59 |
| | Ducting System | A6a | 2 |
| | Air Flow Obstruction | C22j | 60 |
| | Heat Gain/Heat Loss | C22b | 59 |
| | Thermostat Location | A7 | 12 |
| | Cable Assembly | C19 | 52 |
| | Fan/Run Capacitor | C2 | 28 |
| | Motor | C1 | 27 |
| | Low Refrigerant Charge | C20c | 57 |
| | Capillary Tube Blockage | C20a | 55 |
| | Comfort Control Center | C18d | 52 |
| | AC Power Module Board | C17c | 40 |

## DUO-THERM BASEMENT AIR CONDITIONERS...*Continued*

| SYMPTOMS | CAUSE | REFER TO | PAGE |
|---|---|---|---|
| **8. Insufficient cooling or heating compressor runs constantly...** | | | |
| Bimetal Control System | Ducting System | A6a | 2 |
| | Heat Gain/Heat Loss | C22b | 59 |
| | Sealed System | C20 | 55 |
| | Compressor | C5 | 29 |
| Analog Control System | Ducting System | A6a | 2 |
| | Heat Gain/Heat Loss | C22b | 59 |
| | Sealed System | C20 | 55 |
| | Compressor | C5 | 29 |
| Comfort Control Center System | Ducting System | A6a | 2 |
| | Heat Gain/Heat Loss | C22b | 59 |
| | Sealed System | C20 | 55 |
| | Compressor | C5 | 29 |
| **9. Unit operates in wrong mode (cool Instead of heat or reversed)** | | | |
| Bimetal Control System | Operation | B2a | 24 |
| | Thermostat | C18a | 42 |
| | Changeover Thermostat | C10 | 32 |
| | Relay | C16k | 37 |
| | Wiring | C21 | 58 |
| | Reversing Valve | C13 | 34 |
| Analog Control System | Operation | B2a | 24 |
| | Thermostat | C18a | 42 |
| | Changeover Thermostat | C10 | 32 |
| | Relay | C16k | 37 |
| | Wiring | C21 | 58 |
| | Reversing Valve | C13 | 34 |
| Comfort Control Center System | Operation | B2a | 24 |
| | Ambient Sensor | C12 | 33 |
| | Wiring | C21 | 58 |
| | Reversing Valve | C13 | 34 |
| | Comfort Control Center | C18d | 52 |
| **10. Insufficient cooling or heating; compressor cycles off and on...** | | | |
| Bimetal Control System | Operation | B2b | 24 |
| | Short Cycle | C22i | 59 |
| | Ducting System | A6a | 2 |
| | Heat Gain/Heat Loss | C22b | 59 |
| | Air flow Obstruction | C22j | 60 |
| | Thermostat Location | A7 | 12 |
| | Bimetal Thermostat | C18b | 42 |

## DUO-THERM BASEMENT AIR CONDITIONERS...*Continued*

| SYMPTOMS | CAUSE | REFER TO | PAGE |
|---|---|---|---|
| **Insufficient cooling or heating; compressor cycles off and on...cont'd** | | | |
| Analog Control System | Operation | B2c | 25 |
| | Short Cycle | C22i | 59 |
| | Ducting System | A6a | 2 |
| | Heat Gain/Heat Loss | C22b | 59 |
| | Air flow Obstruction | C22j | 60 |
| | Thermostat Location | A7 | 12 |
| | Analog Thermostat | C18c | 50 |
| Comfort Control Center System | Operation | B2d | 26 |
| | Short Cycle | C22i | 59 |
| | Ducting System | A6a | 2 |
| | Heat Gain/Heat Loss | C22b | 59 |
| | Air flow Obstruction | C22j | 60 |
| | Thermostat Location | A7 | 12 |
| | Comfort Control Center | C18d | 52 |
| **11. Excessive cooling or heating; compressor will not shut off.** | | | |
| Bimetal Controls | Thermostat Location | A7 | 12 |
| | Bimetal Thermostat | C18b | 42 |
| | Cable Assembly | C19 | 52 |
| | Relay | C16 | 35 |
| | Bimetal Control Board | C17a | 38 |
| Analog Control System | Thermostat Location | A7 | 12 |
| | Analog Thermostat | C18c | 42 |
| | Cable Assembly | C19 | 52 |
| | Relay | C16 | 35 |
| | Analog Control Box | C17d | 39 |
| Comfort Control Center System | Thermostat Location | A7 | 12 |
| | Comfort Control Center | C18d | 52 |
| | Cable Assembly | C19 | 52 |
| | Remote Sensor | C11 | 32 |
| | AC Power Module Board | C17c | 40 |

## DUO-THERM BASEMENT AIR CONDITIONERS...*Continued*

| SYMPTOMS | CAUSE | REFER TO | PAGE |
|---|---|---|---|
| **12. Noisy operation.** | | | |
| Mechanical Controls | Loose parts | C22c | 59 |
| | Fan Blade | C22e | 59 |
| | Tubing Vibration | C22d | 59 |
| Bimetal Control System | Loose parts | C22c | 59 |
| | Fan Blade | C22e | 59 |
| | Tubing Vibration | C22d | 59 |
| Analog Control System | Loose parts | C22c | 59 |
| | Fan Blade | C22e | 59 |
| | Tubing Vibration | C22d | 59 |
| | Reversing Valve | C13 | 34 |
| Comfort Control Center System | Loose parts | C22c | 59 |
| | Fan Blade | C22e | 59 |
| | Tubing Vibration | C22d | 59 |
| | Reversing Valve | C13 | 34 |
| **13. Turn to furnace; no furnace operation** | | | |
| Bimetal Control System | Operation | B2b | 24 |
| | Wiring | A3, C21 | 1, 58 |
| | DC Voltage | A2 | 1 |
| | Bimetal Thermostat | C18b | 42 |
| | Cable Assembly | C19 | 52 |
| Analog Control System | Operation | B2c | 25 |
| | Wiring | A3, C21 | 1, 58 |
| | DC Voltage | A2 | 1 |
| | Analog Thermostat | C18c | 50 |
| | Cable Assembly | C19 | 52 |
| Comfort Control Center System | Operation | B2b | 24 |
| | Wiring | A3, C21 | 1, 58 |
| | DC Voltage | A2 | 1 |
| | Comfort Control Center | C18d | 52 |
| | Cable Assembly | C19 | 52 |
| | AC Power Module Board | C17c | 40 |