Duo-Therm®

3106986.007 CABLE ADAPTER KIT
CONVERSION TO COMFORT CONTROL CENTER

THE KIT CONSISTS OF:		
(1)	Male Adapter Cable	3106958.006
(1)	Female Adapter Cable	3106958.014
(1)	Installation Instructions	3106957.016

The 3106986.007 Cable Adapter Kit will permit the new Climate Control Center (CCC) to be installed with the existing 10-strand thermostat cable.

GENERAL INSTRUCTIONS

All field wiring modifications should be made in compliance with the latest edition of ANSI/NFPA 70 NEC and ANSI A119.2 for recreational vehicles.

⚠WARNING

These instructions must be read and understood before installation of this kit. This kit must be installed by a Dometic Service Center or a qualified service technician. Modification of this product can be extremely hazardous and could result in personal injury or property damage.

Read these instructions entirely before installing this Kit.

Important: Keep upgrade instructions with air conditioner owner's manual for future reference.

A. Turn off all 115V AC and 12V DC power.

⚠WARNING

Disconnect 115 volt AC power and the 12 volt DC positive (+) terminal at the supply source. Failure to follow these instructions could create a shock hazard causing death or severe personal injury.

B. Connect the correct 10-pin plug to the 10-conductor cable in the 14-1/4" x 14-1/4"(±1/8") opening in the RV's roof. (FIG. 1)

C. Connect the red to red and the black to black, between the adapter cable and the Climate Control Center (CCC) control box. (FIG. 2)

FIG. 1

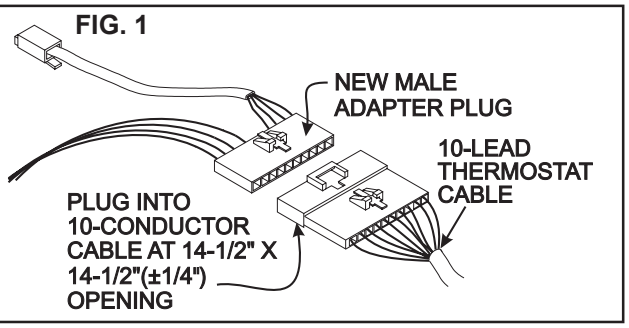

FIG. 2

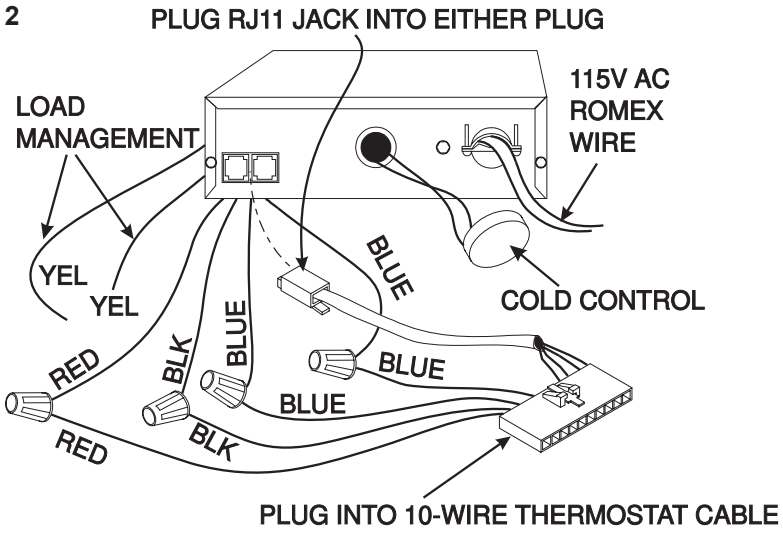

REVISION
Form No. 3106957.016 12/01
(Replaces 3106957.008)
©2001 Dometic Corporation
LaGrange, IN 46761

D. If the previous **electronic thermostat was used** to control the furnace, and your new Comfort Control Center looks like FIG. 4A, connect the blue wires of control box to the blue wires of the adapter cable. Polarity is not important. See FIG. 2. If your new Comfort Control Center looks like FIG. 4B, connect the furnace wires as explained above and set dip switch #5 (FURNACE) in the CCC control box to the "ON" position. See FIG. 5.

E. If **load management system was used**: On electronic system, connect one yellow lead to one lead and the other yellow to remaining lead. Polarity is not important.

F. Connect the second adapter cable to the 10-wire cable at the wall thermostat location. See FIG. 3.

G. Connect the adapter cable harness to the coach's 12V DC system (red to 12V DC positive + ; black to 12V DC negative –). The two blue wires are connected to the furnace thermostat cables of the vehicle. Connect RJ11 phone plug to Climate Control Center (CCC) and mount it to the wall.

H. Install air conditioner/heat pump per its instructions, and plug into the proper connections of the CCC control box.

I. Turn coach power (AC and DC) back ON, and test the operation.

FIG. 3

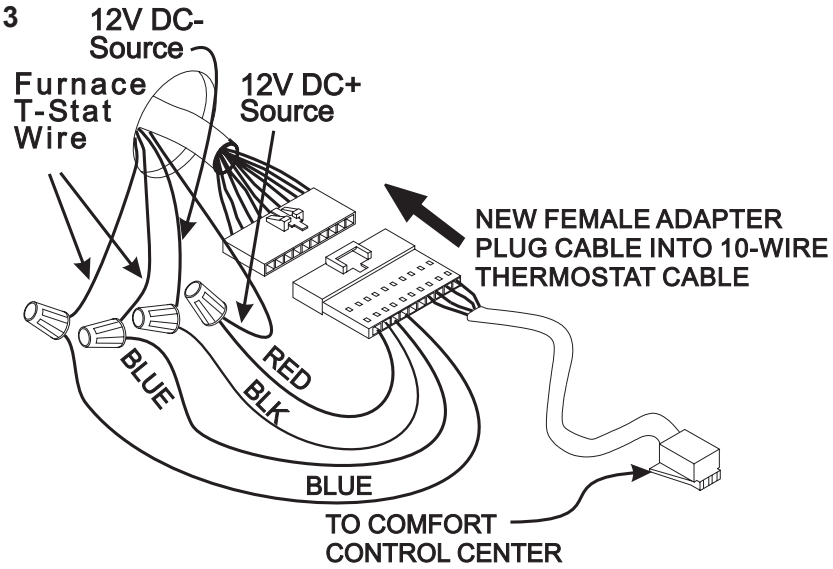

FIG. 4A

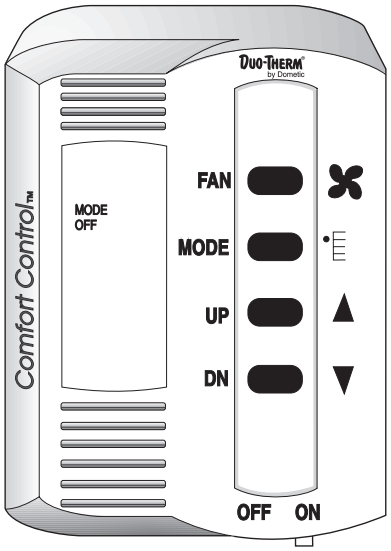

FIG. 4B

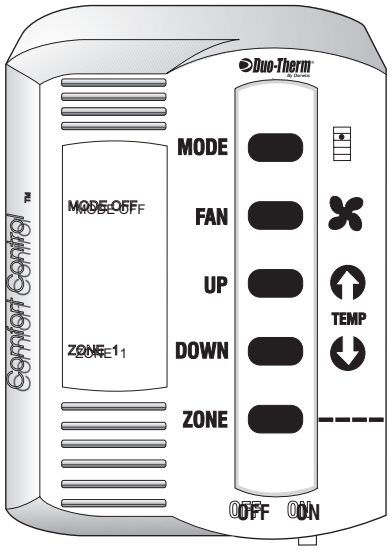
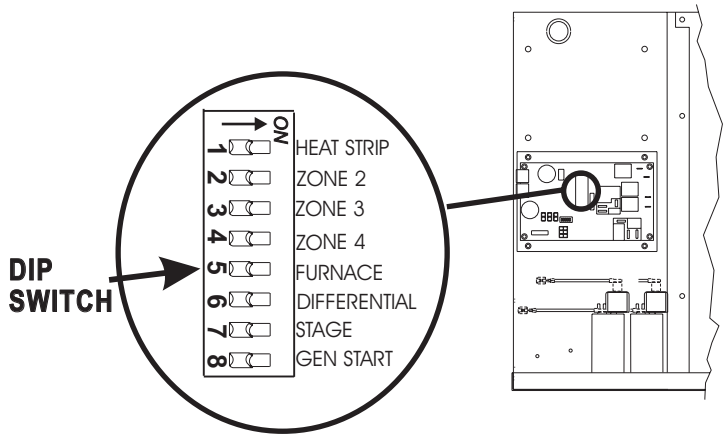
FIG. 5