DOMETIC

MARINE CONTROL UNITS

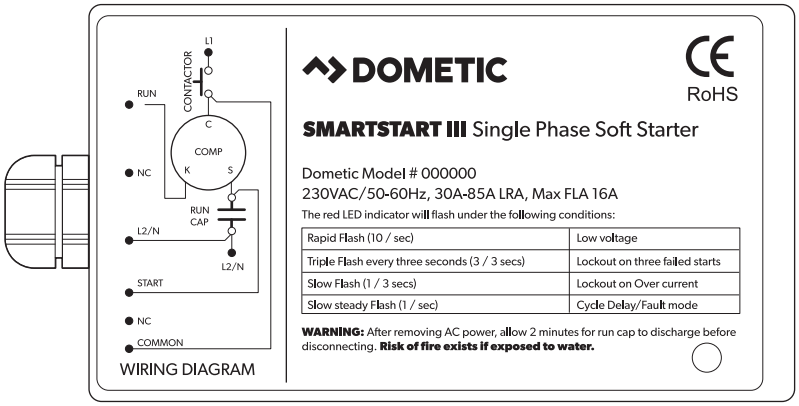

SMRTST IP65 1161 16A LRA45-70A, SMRTST IP65 1161 9A LRA30-45A, SMRTST IP65 2361 16A LRA30-85A, SMRTST IP65 2361 32A LRA85-175A, SMRTSTIII 2361 16ALRA30-85A , SMRTSTIII 2361 32A LRA85-175A

EN

SmartStart Control

Installation Manual. 2

⚠ WARNING

Cancer and Reproductive Harm
www.P65Warnings.ca.gov

REVISION E | L-5505 | Form No. 341157 11/19 | ©2019 Dometic Corporation

Service Center & Dealer Locations
Visit: www.dometic.com

Read these instructions carefully. These instructions **MUST** stay with this product.

Contents

1 Explanation of Symbols and Safety Instructions 2
1.1 Recognize Safety Information 2
1.2 Understand Signal Words 2
1.3 Supplemental Directives 2
1.4 General Safety Messages 3
2 General Information 3
2.1 Selection 3
3 Intended Use 3
4 Specifications 4
4.1 Dimensions 4
5 Wiring Diagram 4
6 Installation 5
6.1 Preparing the Installation Site 5
6.2 Installing the SmartStart Control 5
6.3 Making the Electrical Connections 6
7 Troubleshooting 6
8 Disposal 7
9 Warranty Information 7
9.1 United States and Canada 7
9.2 All Other Regions 7

1 Explanation of Symbols and Safety Instructions

This manual has safety information and instructions to help you eliminate or reduce the risk of accidents and injuries.

1.1 Recognize Safety Information

This is the safety alert symbol. It is used to alert you to potential physical injury hazards. Obey all safety messages that follow this symbol to avoid possible injury or death.

1.2 Understand Signal Words

A signal word will identify safety messages and property damage messages, and also will indicate the degree or level of hazard seriousness.

DANGER!
Indicates a hazardous situation that, if **not** avoided, will result in death or serious injury.

WARNING
Indicates a hazardous situation that, if **not** avoided, could result in death or serious injury.

CAUTION
Indicates a hazardous situation that, if **not** avoided, could result in minor or moderate injury.

NOTICE: Used to address practices **not** related to physical injury.

Indicates additional information that is **not** related to physical injury.

1.3 Supplemental Directives

To reduce the risk of accidents and injuries, please observe the following directives before proceeding to install this appliance:

- Read and follow all safety information and instructions.
- Read and understand these instructions before installing this product.

- The installation must comply with all applicable local or national codes, including the latest edition of the following standards:
  - American Boat and Yacht Council (ABYC)
  - ANSI/NFPA70, National Electrical Code (NEC)

1.4 General Safety Messages

WARNING: ELECTRICAL SHOCK, FIRE, AND/ OR EXPLOSION HAZARD. Failure to obey the following warnings could result in death or serious injury:

- Use only Dometic replacement parts and components that are specifically approved for use with the appliance.
- Avoid improper installation, adjustment, alterations, service, or maintenance of the appliance. Service and maintenance must be done by a qualified service person only.
- Do not modify this product in any way. Modification can be extremely hazardous.

WARNING: ELECTRICAL SHOCK HAZARD. Turn the circuit breaker off before installing this product. Failure to obey this warning could result in death or serious injury.

2 General Information

This section provides information on the tooling and included parts for the SmartStart Control.

The images used in this document are for reference purposes only. Components and component locations may vary according to specific product models. Measurements may vary ±0.38 in. (10 mm).

Dometic recommends that the following tools and materials be used when installing the appliance.

Included Parts	Quantity
Double-Adhesive Tape	1
Flag Terminal	2
Captive Spade Terminal	1
Butt-Splice	1

Optional Parts[1]	Reference Number
PTC Loading Device	4220046
Compressor Triac	A-458

[1] Available as an accessory (not included).

Recommended Tools	
Crimper	Wire Cutter
Screwdriver	Multimeter
Thermal Compound	#4-40 nuts

2.1 Selection

Select the appropriate model for your application according to the compressor's locked rotor amperage (LRA). If the SmartStart Control will be exposed to water spray, rain, or waves, select a water tight model. Refer to the table below to ensure proper SmartStart Control selection.

Model Number	LRA	Water tight
SMRTST IP65 1161 16A LRA 45-70A	45–70	Yes
SMRTST IP65 1161 9A LRA 30-45A	30–45	
SMRTST IP65 2361 16A LRA30-85A	30 –85	
SMRTST IP65 2361 32A LRA 85-175A	85–175	
SMRTSTIII 2361 16A LRA30-85A	30–85	No
SMRTSTIII 2361 32A LRA85-175A	85–175	

3 Intended Use

The SmartStart Control is a single-phase softstarter for marine air-conditioning units. It is equipped with an annunciation system for easy fault diagnosis. Protection features and an LED fault indicator safeguard the compressor or motor in adverse operating conditions.

The SmartStart Control is intended only for use in the boat for which it is supplied. Use these instructions to ensure correct installation and operation of the SmartStart Control.

The manufacturer accepts no liability for damage in the following cases:

- Faulty assembly or connection

- Damage to the product resulting from mechanical influences and excess voltage
- Alterations to the product without express permission from the manufacturer
- Use for purposes other than those described in the operating manual

Dometic Corporation reserves the right to modify appearances and specifications without notice.

4 Specifications

Low Voltage Cutoffs

Model Rating	Before Start Cutoff	Running Mode Cutoff
230 V models	180 V	175 V
115 V models	103 V	98 V

4.1 Dimensions

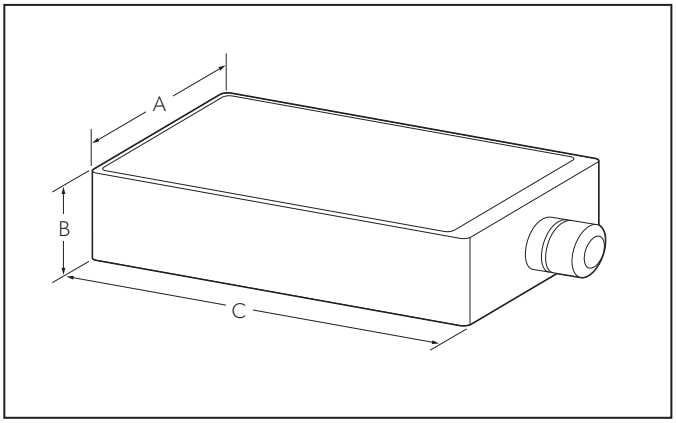

1 Dimensions

A	2.2 in. (55 mm)
B	3.1 in. (80 mm)
C	6.3 in. (160 mm)

5 Wiring Diagram

Figure 2 provides an example wiring diagram for the SmartStart Control.

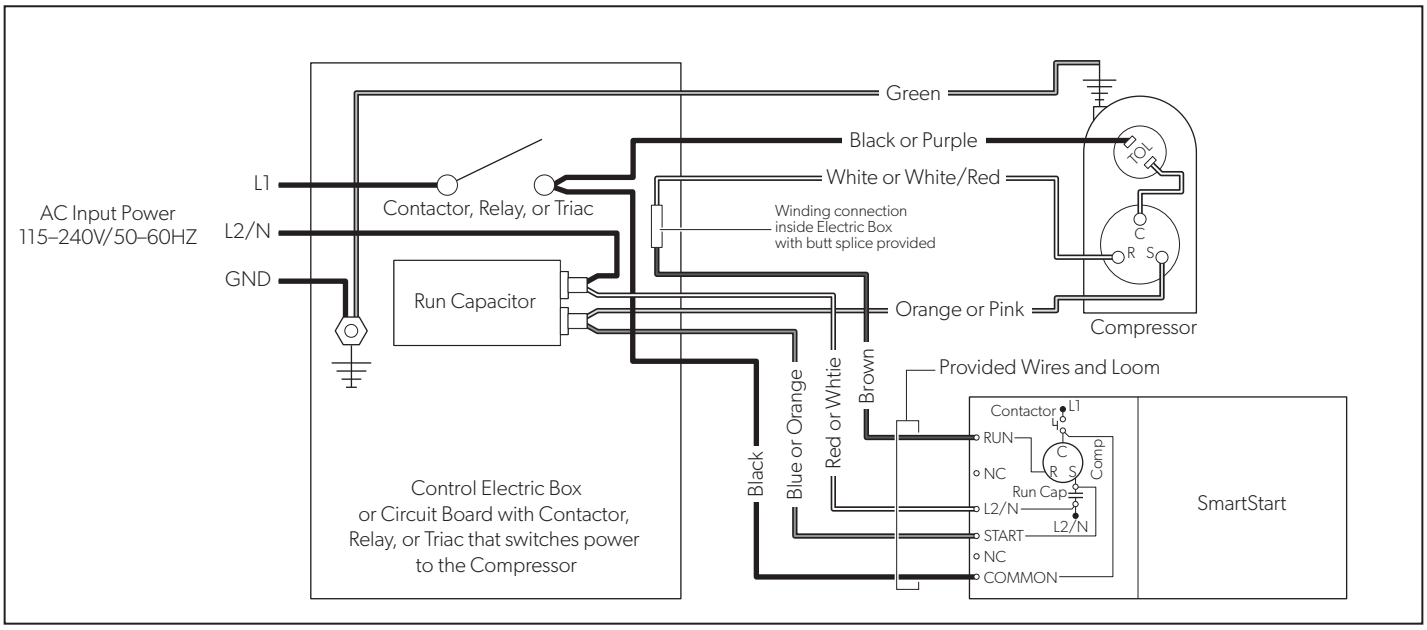

2 SmartStart Control Wiring Diagram

6 Installation

Follow the procedures below to install the SmartStart Control.

6.1 Preparing the Installation Site

This section explains how to prepare the electrical box for SmartStart Control installation.

1. Turn the circuit breaker off before beginning the installation.
2. If the unit uses a start assist (PCTR or Ceramite), remove it.
3. If the unit uses a start relay and a start capacitor, remove the start capacitor and its connections to the start relay terminal number 1 and the run capacitor.
4. Remove the start relay, if practical. Ensure that the wire connections that pass through its terminals are properly spliced.
5. Cruisair STQ, SQUF, or SQL units only: If the unit uses a Rev B Q-relay board (4120050) with a yellow sticker, refer to "Option 1 for Installation With a Rev B Q-relay Board" on page 5 or "Option 2 for Installation with a Rev B Q-relay Board" on page 5.

6.1.1 Option 1 for Installation With a Rev B Q-relay Board

If your unit is not equipped with a Rev B Q-relay board with a yellow sticker, skip to "Installing the SmartStart Control" on page 5.

Install a PTC loading device (not included, Dometic part number 4220046) across the pump L1 and pump L2 terminals on the Q-logic circuit board terminal strip.

NOTICE: Do **not** allow the PTC to come in contact with wires or the inside of the electrical box plastic cover. The PTC can reach high temperatures. Failure to obey this notice could result in damage to the product.

6.1.2 Option 2 for Installation with a Rev B Q-relay Board

1. Disconnect the wires from the Q-relay board.
2. Remove the Q-relay board and its mounting hardware.
3. Using thermal compound and #4-40 nuts (not included), install a compressor triac (not included, Dometic part number A-548) in the space vacated by the Q-realy board.
4. Connect the wires that were previously connected to the Q-relay board to the triac:
   a. Connect the wire that was previously connected to the L1 terminal on the Q-relay board to the T1 terminal on the triac.
   b. Connect the wire that was previously connected to the T2 terminal on the Q-relay board to the T2 terminal on the triac.
   c. Connect the wire that was previously connected to the YEL terminal on the Q-relay board to the G terminal on the triac.
   d. Discard the wire that was previously connected to the L2 terminal on the Q-relay board.

6.2 Installing the SmartStart Control

WARNING: ELECTRICAL SHOCK AND FIRE HAZARD.
The SmartStart Control **must** be mounted in an area where it will **not** be exposed to water. Failure to obey this warning could result in death or serious injury.

1. Using the double-adhesive tape provided, mount the SmartStart Control in a vertical orientation with the wires at the bottom.
   – If there is enough room inside the electrical box, mount the SmartStart Control inside. The wiring loom is not necessary if the SmartStart Control is mounted inside the electrical box.
   – If there is not enough room inside the electrical box, mount the SmartStart Control so that the wires and loom can reach all the necessary connections within the box.

6.3 Making the Electrical Connections

Follow the procedure below to wire the SmartStart Control. Refer to "Wiring Diagram" on page 4.

1. Remove the compressor run wire from its existing connection and splice it to the brown wire on the SmartStart Control using the butt-splice provided.
2. Connect the red or white wire from the SmartStart Control to the L2 terminal on the run capacitor using the flag terminal provided.
3. Connect the blue or orange wire from the SmartStart Control to the start winding terminal on the run capacitor using the flag terminal provided.
4. Connect the black wire from the SmartStart Control to the compressor common output terminal using the captive spade terminal provided:
   - Marine air systems passport I/O or DDC circuit boards: connect to the "Comp L1" terminal.
   - Cruisair SMXII or Q-Logic circuit boards: connect to the "Pump L1" terminal.
   - Systems with contactors: connect to the L1 terminal (output side of L1) on the contactor.
   - Dometic systems with unity circuit boards: connect to the "Comp L1" terminal screw.
5. Close the electric box and turn the circuit breaker on. Allow 5–10 start cycles for the SmartStart Control to optimize.

7 Troubleshooting

The SmartStart Control is equipped with an LED indicator to relay fault conditions, which can lead the SmartStart Control to shut down a compressor or motor. The red LED indicator flashes based on the fault condition.

Flash Sequence	Fault	Description
Rapid Flash (10 every second)	Low Voltage	This flash sequence indicates "low supply voltage" before or after a softstart.
		If low voltage is detected before a start, a restart is attempted after 50 seconds.
		If low voltage is detected after a start, a restart is attempted after three minutes.
		Refer to "Low Voltage Cutoffs" on page 6 for low voltage cutoff limits.
Triple Flash (three every three seconds)	Lockout on Three Failed Starts	This flash sequence indicates a failure to start on three consecutive start attempts.
		Restart is attempted after 50 minutes.
Slow Flash (one every three seconds)	Lockout on Overcurrent	This flash sequence indicates an overcurrent in the running mode of the compressor motor. The overcurrent limit is 25 A for the 8–16 A version, and 50 A for the 16–32 A version.
		This flash sequence is also displayed if the internal Klixon of the compressor trips due to overheating.
		Restart is attempted after 10 minutes.
Slow Steady Flash (one every second)	Cycle Delay/Fault mode	This flash sequence indicates a cycle delay between two consecutive softstarts or other faults.
		Restart is attempted after a default period of three minutes.
		Other possible reasons for this fault include improper wiring during installation, a failed softstart attempt, intermittent power loss, the frequency going out of range, or a failed run capacitor.

8 Disposal

Place the packaging material in the appropriate recycling waste bins, whenever possible. Consult a local recycling center or specialist dealer for details about how to dispose of the product in accordance with all applicable national and local regulations.

9 Warranty Information

Refer to the sections below for information about warranty and warranty support in the US, Canada, and all other regions.

9.1 United States and Canada

LIMITED WARRANTY AVAILABLE AT WWW.DOMETIC.COM/WARRANTY.

IF YOU HAVE QUESTIONS, OR TO OBTAIN A COPY OF THE LIMITED WARRANTY FREE OF CHARGE, CONTACT:

DOMETIC CORPORATION
MARINE CUSTOMER SUPPORT CENTER
2000 NORTH ANDREWS AVENUE
POMPANO BEACH, FLORIDA, USA 33069
1-800-542-2477

9.2 All Other Regions

The statutory warranty period applies. If the product is defective, please contact the manufacturer's branch in your region (see the back of the instruction manual for the addresses) or your retailer.

For repair and guarantee processing, please include the following documents when you send in the device:

- A copy of the receipt with purchasing date
- A reason for the claim or description of the fault

Mobile living made easy.

DOMETIC

dometic.com

YOUR LOCAL DEALER

dometic.com/dealer

YOUR LOCAL SUPPORT

dometic.com/contact

YOUR LOCAL SALES OFFICE

dometic.com/sales-offices

A complete list of Dometic companies, which comprise the Dometic Group, can be found in the public filings of:
DOMETIC GROUP AB Hemvärnsgatan 15 SE-17154 Solna Sweden