2017 MANUAL

DOMETIC WATER HEATER MANUAL

©2016 DOMETIC CORPORATION
ELKHART , IN 46514

Part Number 90510

Mobile living made easy.

DOMETIC

Dometic Water Heaters
Table of Contents

- **AftermarketLP Gas Water Heater Model Identification** 2
- **Pilot Models**
  - Questions 3
  - Model Number Explanation / Features 4
  - Recommended Tools & Equipment 5
  - Gas Thermostat Controls & Pilot Assemblies 6
  - Pilot Sequence of Operation 7
  - Pilot & Main Burner 8
  - Trouble Shooting Guide - Pilot 9
  - Engine Heat Exchange System / Aftermarket Heating Elements 10
  - Bolt-In Heating Element, Thermostat & ECO / 110 VAC Trouble Shooting Wiring Schematic 11
  - Screw-In Heating Element, Thermostat & ECO / 110 VAC Trouble Shooting Wiring Schematic 12
- **Electronic Ignition & XT Models**
  - Questions 13
  - Model Number Explanation / Features 14
  - Recommended Tools & Equipment 15
  - DSI Sequence of Operation 16
  - Trouble Shooting Guide - Electronic Ignition 17-18
  - Information Guide - Intermittent Ignition 19-20
  - Potted Channel Circuit Boards / Thermal Cut Off Device / Thermostat 21
  - Wiring Schematics 22
  - Water Heater Wiring Revision GC 10A-4E & GC 6A-10E 23
  - Water Heater Conversion 3E to 4E & 9E 10E 24
  - 4E & 10E - Sequence of Operation & Quick Diagnostic 25
- **General Water Heater Information**
  - Questions 26
  - Pressure Temperature Relief Valve / Water Heater Tank Corrosion / Dometic Clad Tank 27
  - Flushing Tank / Winterizing Instructions 28
  - Water Heater Terminology 29
- **Pilot Water Heater Parts Breakdown** 30-32
- **Replacement Part Reference**

  G10B, G10C / G610-3B, GH610-3 / G4SM / G6A-2, G6A-3, G6A-6, G6A-6P, G6A-7, G6A-7P / GC6A, GC6A-3, GC6A-6, GC6A-7 / GH6-3, GH6-6, GH6-7 / GC6AA-7, GC6AA-7P / GC6AA-8, GC6AA-8P / G610-3,
  GC10-1, GC10-2, GC10-2P / GC10A-2 / GC10A-2P / G10-1, G10-1P, G10-2, G10-2P
- **Electronic Ignition Water Heater Parts Breakdown** 33-36
- **Replacement Part Reference**

  G610-3E, GH610-3E/GCH6-4E, GCH6-6E, /GC6A-7E/GC6AA-7E/GC6AA-8E/GC6AA-9E, GC6AA-10E G6A-2E, G6A-3E, G6A-4E, G6A-6E, G6A-7E, G6A-8E / G6A-3E, GH6-3E / GH6-4E, GH6-6E, GH6-7E,
  GH6-8E/GCH6A-7E, GCH6A-8E, GCH6A-9E/GCH6A-10E/GCH10A-2E, GCH10A-3E/GCH10-4E/G10-1E/ GH10-2E, GH10-3E/ GC10-1E, GC10-2E /GC10A-2E/GC10A-3E/GC10A-4E
- **XT Water Heater**
  - 10 Gal XT Water Heater Replacement Valve Kit 37
  - Parts Reference 38
  - Wiring Diagram 39
- **Service Tank Kit Part Numbers** 40
- **Marine Water Heater Parts Breakdown** 41
- **On Demand Water Heater**
  - Questions 42
  - Model number explanation/ features 43
  - Recommended tools and equipment 43-44
  - Cut out dimensions/ wiring diagram 45
  - Troubleshooting guide 46
  - Sequence of operation 47-48
  - Parts list 49

Dometic LP Gas Water Heaters

PART #	MODEL#		DESCRIPTION
96110	G6A-7	6 GAL.	GAS - PILOT
	G6A-7P	6 GAL.	GAS - PILOT RELIGHT- NLA
96117	GC6AA-8	6 GAL.	GAS/ELECTRIC - PILOT
	GC6AA-10E	6 GAL.	GAS/ELECTRIC – DSI – OEM ONLY
96163	GCH6A-10E	6 GAL.	GAS/ELECTRIC - HEAT EXCHANGER - DSI
96121	G6A-8E	6 GAL.	GAS - DSI
96136	GH6-8E	6 GAL.	GAS - HEAT EXCHANGER - DSI
90073	G9-EXT	6 GAL.	GAS - DSI - EXOTHERMAL
90071	GE9-EXT	6 GAL.	GAS/ELECTRIC - DSI - EXOTHERMAL
90068	GEH9-EXT	6 GAL.	GAS/ELECTRIC - HEAT EXCHANGER - DSI - EXOTHERMAL
94180	G10-2	10 GAL	GAS - PILOT
94186	GC10A-2	10 GAL	GAS/ELECTRIC - PILOT
94191	G10-3E	10 GAL	GAS - DSI
	GH10-3E	10 GAL	GAS - HEAT EXCHANGER - DSI
94022	GC10A-4E	10 GAL	GAS/ELECTRIC - DSI - EXOTHERMAL
94023	GCH10A-4E	10 GAL	GAS/ELECTRIC - HEAT EXCHANGER - DSI - EXOTHERMAL
94105	G16-EXT	10 GAL	GAS - DSI - EXOTHERMAL
94026	GE16-EXT	10 GAL	GAS/ELECTRIC - DSI - EXOTHERMAL
94029	GEH16-EXT	10 GAL	GAS/ELECTRIC - HEAT EXCHANGER - DSI - EXOTHERMAL

MARINE WATER HEATERS - 110 VOLT

	EHM4-SM	4 GAL	INTERNAL HEAT EXCHANGER - 150 PSI
	EHM6-SM-FHX	6 GAL	INTERNAL HEAT EXCHANGER - SINGLE LOOP - 75 PSI
93891	EHM6-SM-FHX	6 GAL	INTERNAL HEAT EXCHANGER - SINGLE LOOP - 150 PSI
	EHM6-SM-FHX-4W	6 GAL	INTERNAL HEAT EXCHANGER - SINGLE LOOP - 150 PSI - ANDERSON CONNECTOR
	EHM6-SM-FHX-TC	6 GAL	INTERNAL HEAT EXCHANGER - SINGLE LOOP - 150 PSI W/VAC VALVE
94610	EHM6-SM-FHX-SS	6 GAL	INTERNAL HEAT EXCHANGER - SINGLE LOOP - 150 PSI - SS
93882	EHM11-SM-FHX	11 GAL	INTERNAL HEAT EXCHANGER - SINGLE LOOP - 150 PSI
	EHM11-SM-FHX	11 GAL	INTERNAL HEAT EXCHANGER - SINGLE LOOP - 75 PSI
94550	EHM11-SM-FHX-SS	11 GAL	INTERNAL HEAT EXCHANGER - SINGLE LOOP - 150 PSI - SS
	EHM11-SM-FHX-4W	11 GAL	INTERNAL HEAT EXCHANGER - SINGLE LOOP - 150 PSI - ANDERSON CONNECTOR
	EHP-10-SS	10 GAL	INTERNAL HEAT EXCHANGER - FOUR LOOP - 150 PSI - SS
96335	EHP-10	10 GAL	INTERNAL HEAT EXCHANGER - FOUR LOOP - 150 PSI
	EHM11-SM-SS-DUAL-HX	11 GAL	EXTERNAL & INTERNAL HEAT EXCHANGER - SINGLE LOOP - 150 PSI - SS
94210	EH20	20 GAL	INTERNAL HEAT EXCHANGER - TWO LOOP - 150 PSI
94215	E20	20 GAL	NO HEAT EXCHANGER - 150 PSI

INTERNATIONAL MARINE WATER HEATERS - 220 VOLT - CE APPROVED

	EHM4		
94590	EHM6-FHX	6 GAL	INTERNAL HEAT EXCHANGER - SINGLE LOOP - 150 PSI
	EHM6-FHX	6 GAL	INTERNAL HEAT EXCHANGER - SINGLE LOOP - 75 PSI
94605	EHM6-SS-FHX	6 GAL	INTERNAL HEAT EXCHANGER - SINGLE LOOP - 150 PSI - SS
	EHM6-FHX-4W	6 GAL	INTERNAL HEAT EXCHANGER - SINGLE LOOP - 150 PSI - ANDERSON CONNECTOR
94555	EHM11-FHX	11 GAL	INTERNAL HEAT EXCHANGER - SINGLE LOOP - 150 PSI
	EHM11-FHX	11 GAL	INTERNAL HEAT EXCHANGER - SINGLE LOOP - 75 PSI
	EHM11-FHX	11 GAL	INTERNAL HEAT EXCHANGER - SINGLE LOOP - 150 PSI
94575	EHM11-SS-FHX	11 GAL	INTERNAL HEAT EXCHANGER - SINGLE LOOP - 150 PSI - SS
	EHM11-FHX-4W	11 GAL	INTERNAL HEAT EXCHANGER - SINGLE LOOP - 150 PSI - ANDERSON CONNECTOR
94220	EH20	20 GAL	INTERNAL HEAT EXCHANGER - TWO LOOP - 150 PSI
94225	E20	20 GAL	NO HEAT EXCHANGER - 150 PSI
	E20	20 GAL	NO HEAT EXCHANGER - 75 PSI

DSI - DIRECT SPARK IGNITION SS - STAINLESS JACKET
XT - EXOTHERMAL

Pilot Models

QUESTIONS

The following questions should be answered during this portion of the manual:

- Are the Robertshaw and White Rodgers thermostat gas control valves inter-changeable?
- What is the minimum gas pressure required for proper water heater operation?
- Where on the water heater gas control can gas pressure be tested?
- Can the pilot flame be adjusted?
- What is minimum millivolt output of the thermocouple required for proper gas control operation?
- How can you test a thermocouple?
- How tight should the thermocouple connection be at the gas control?
- What is an E.C.O., where is it located and what is its function?
- What is a proper main burner air shutter adjustment?
- What is the proper control and main burner alignment?
- How can you easily check the calibration of a control?

Dometic 6 and 10 Gallon Pilot Water Heaters

Dometic water heaters are designed and approved for use only in recreation vehicles (travel trailers, 5th wheels, motor homes, etc.). They are offered in two sizes: 6 and 10 gallon capacities.

TYPE OF GAS IGNITION -

This unit is ignited outside of the trailer by a match, piezo ignitor or other ignition device. The water temperature is adjustable at the thermostat control.

EXPLANATION OF MODEL NUMBER:

Pilot Models

G C H 6 A - 8 P

- P → Pilot Relight
- 8 → Version
- A → Type of heating element
- 6 → Gallon capacity (6 or 10)
- H → Engine Heat Exchange
- C → Combination gas and 110 VAC electric
- G → Propane Gas

NOTE: When replacing the element on a combination gas/110 VAC unit, always check the back of the heater for the type of element it has. It will either be a bolt-on or screw-in element. They are not interchangeable.

FEATURES

- All units operate on propane gas.
- A heat exchange option is available for motor homes. The water heater tank must have factory equipped heat exchange tubes welded on it already. They cannot be added later. A new water heater tank with this option is the only way to obtain this feature.
- Skin mounting allows the water heater to be hooked up with plumbing and electrical before the sidewall is erected.
- The tank has a clad aluminum lining that protects against corrosion and does not need to be replaced on a yearly or more frequent basis unlike an anode rod. A more detailed explanation of cladding is found in the back of this manual.
- 95% of all servicing can be done on the outside of the water heater. 110 VAC heating components are the exception since they are located on the back of the water heater inside the trailer.
- A flush flange is available for all models. This makes the access door flush with the trailer sidewall.
- There are multiple protection features in the form of a pressure-temperature relief valve, a limit switch in the gas thermostat and an externally sealed combustion chamber.
- On combination water heaters, the gas mode and the 110 VAC heating mode can be operated at the same time since each mode has its own thermostat.
- Both the six and ten gallon units have the lightest weight in the industry.
- The Dometic Limited Warranty is for a period of two years from the date of purchase to the original owner.
- There are over 1,000 Service Centers throughout the United States.

Recommended Tools and Equipment

U-Tube Manometer - This is the most accurate device for measuring gas pressure. If you use a dial-type manometer, it should be calibrated periodically with this type of manometer.

Thermostat Wrench - This tool allows for easier and safer removal of the gas thermostat control. An adjustable version for different size controls is available through most RV distributors or you may fabricate one from angle iron. We do not recommend using a pipe wrench because it may damage the control causing it to go out of calibration.

U-TUBE MANOMETER
with 1/8" pipe nipple

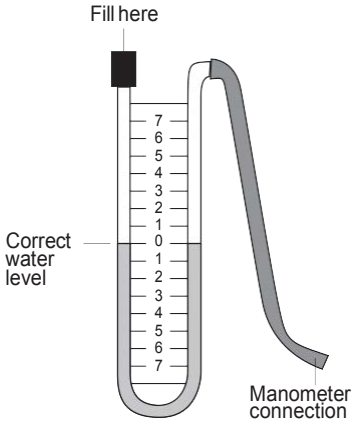

THERMOSTAT WRENCH

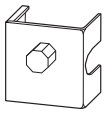

Multi-meter - This is the most versatile meter and will test AC voltage and continuity. A continuity test can be used to test for a blown E.C.O. on a gas control.

Magnet Assembly Thermocouple Tester - This assembly can be obtained at an electronics or hardware store. This same assembly can also be removed from a Robertshaw control. It will verify if a thermocouple is good. For testing, screw a thermocouple into the tester, heat the thermocouple for 25 seconds and then press the plunger down. If the plunger pops up in less than 25 seconds, the thermocouple is faulty.

MULTI-METER TO TEST VOLTAGE AND CONTINUITY

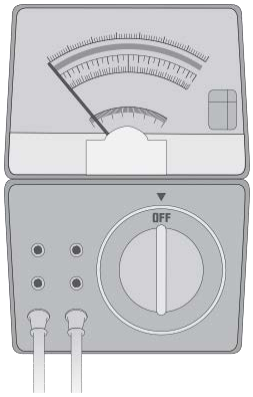

MAGNET ASSEMBLY TO TEST THERMOCOUPLE

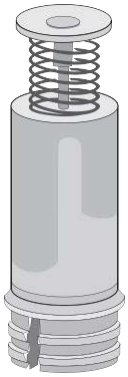

Common Hand Tools - 1/8″ and 1/4″ nut drivers, open end wrenches, flat blade and Phillips screw drivers.

Leak Test Solution - A solution that bubbles when applied to gas fittings or connections showing when a gas leak is present.

Gas Thermostat Controls and Pilot Assemblies

Only two makes of gas controls have been used on our pilot model water heaters. They are the Robertshaw "Unitrol" and White Rodgers (formerly Jade or ITT).

The Robertshaw control came in two different sizes of gas inlets: 3/8″ inverted flare and 3/8″ N.P.T. The inverted inlet control is no longer available. Therefore, the water heater gas line connection will have to be modified to 3/8″ N.P.T. in order to use the current Robertshaw control.

The White Rodger control is the valve we are using on all production today. Formerly it had a 3/8″ N.P.T. inlet. Now it is only available with a 1/4″ inlet. This improvement eliminates the adapter fitting into the control allowing the use of only a single 45 degree elbow (3/8″ flare x 1/4″ N.P.T.). If you are replacing a current 1/4″ inlet model control with a earlier model 3/8″ inlet control you may have in stock, the adapter fitting that mates the control and elbow fitting is still available.

Although the controls appear quite different in size, the White Rodgers and Robertshaw control are interchangeable. Their manifolds will both line up with the burner tube properly.

Both controls have a port to test gas pressure through the valve. This can be accomplished by removing the cover screw and inserting a 1/8" pipe nipple. After attaching your manometer hose to this fitting, the manometer should register 10" W.C. through the valve while it is operating.

NOTE: The only valve available today is the Robertshaw control. It will come with the inlet adaptor fittings to replace any existing control if you are buying the genuine Dometic replacement part. (91602) When replacing an older White Rogers valve the orientation of the valve may be slightly different when using the Robertshaw style but they are interchangeable.

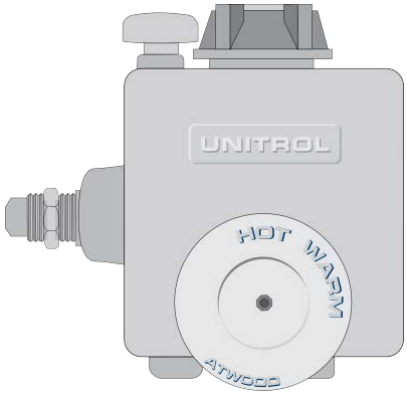

ROBERTSHAW "UNITROL"

- 3/8″ Inverted inlet
  3/8″ N.P.T. outlet
  (no longer available)
- 3/8″ N.P.T. inlet
  3/8″ N.P.T. outlet

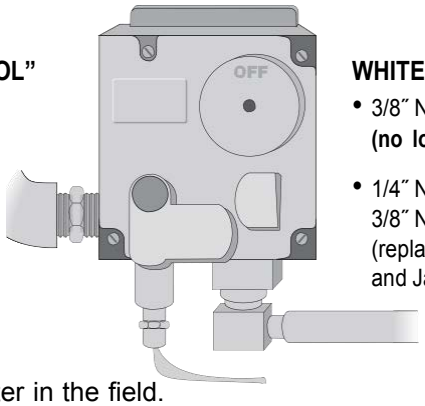

WHITE RODGERS (JADE, ITT)

- 3/8″ N.P.T. outlet
  (no longer available)
- 1/4″ N.P.T. inlet
  3/8″ N.P.T. outlet
  (replaces all Robertshaw and Jade controls)

There are two main pilot assemblies that you will encounter in the field.

The first is an earlier model Robertshaw pilot assembly with a 1/4″ pilot gas line that mounted on the left side of the main burner.

The current pilot is the Jade assembly with a 1/8″ pilot gas line and it mounts on the right side of the main burner.

The Robertshaw pilot is no longer available and the Jade pilot must be substituted. When installing a Jade assembly in place of a Robertshaw assembly, if there is not a location on the right side of the main burner to mount the Jade pilot, a new burner that has the proper mounting holes will have to be purchased.

Note: The size of the gas line does not have any effect on the size of the pilot flame. Only the gas pressure and pilot orifice regulate the height of the pilot flame.

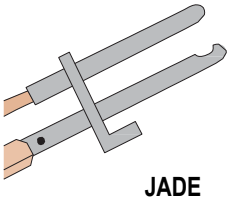

JADE

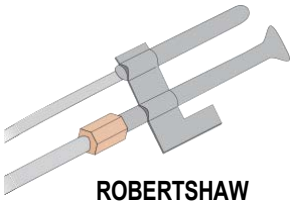

ROBERTSHAW
(obsolete, replace with Jade)

Pilot Sequence of Operation

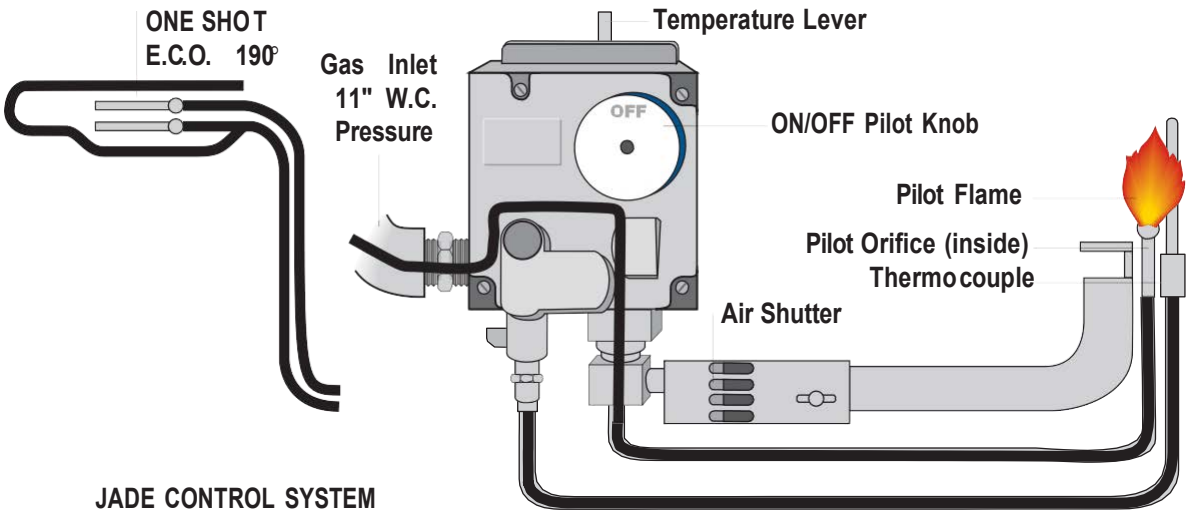

PILOT OPERATION

- **Gas Pressure** — 11″ W.C. to control is necessary. Set with two gas appliances running.
- **Gas Control** — supplies gas to pilot orifice when control ON/OFF pilot knob is held at pilot position.
- **Pilot Orifice** — meters gas to heat thermocouple. Flame should be high enough to engulf the thermocouple.
- **Thermocouple** — generates millivoltage to the gas control's magnet assembly.
- **Magnet** — when it receives 12 millivolts or more it allows gas to flow freely to pilot without holding pilot knob.
- **E.C.O.** — passes millivolts through the gas control and back to thermocouple. Trips permanently open if water temperature exceeds 190°F.

MAIN BURNER OPERATION

- **Gas Control** — supplies gas to main burner when control knob is set to "ON" position and the temperature lever is set to desired temperature after pilot is lit.
- **Main Burner Orifice** — meters gas through burner tube.
- **Main Burner** — pilot ignites gas when it reaches end of this tube. Flame height adjusted by sliding air shutter. Ideal setting is 1/4 way open (.20″). Flame should be primarily blue with a trace of yellow.
- **Temperature Knob** — setting of knob determines burner cycle and water temperature. Temperature range is 70°F - 140°F. The temperature should be set to the lowest comfortable setting to avoid scalding or tripping of the ECO.

Pilot and Main Burner

Pilot Adjustment

Only the gas pressure, gas valve, and the pilot orifice regulate the height of the pilot flame. Early model gas controls have a pilot adjustment screw, but this screw has very little effect on the pilot. The pilot adjustment has been removed from the current Robertshaw control. The flame should be high enough to engulf the thermocouple at all times. A pilot flame any larger could blow the E.C.O. in the gas control. This is typically the result of enlarging the pilot orifice hole with a pin or similar item. For further corrective measures, refer to the trouble-shooting guide.

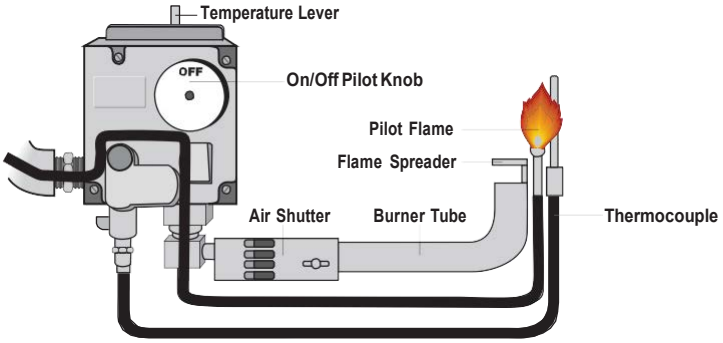

Main Burner Adjustment

The gas pressure, air shutter, cleanliness of the burner tube, and orifice regulate the main burner flame. The main burner flame should be mainly blue with a trace of yellow and fairly quiet. If it is not, adjust the gas pressure to 11″ W.C., ensure that the main burner air shutter is 1/4 way open and verify that the main burner flame spreader is square to the end of the main burner and centered side to side. For further corrective measures, refer to the trouble-shooting guide.

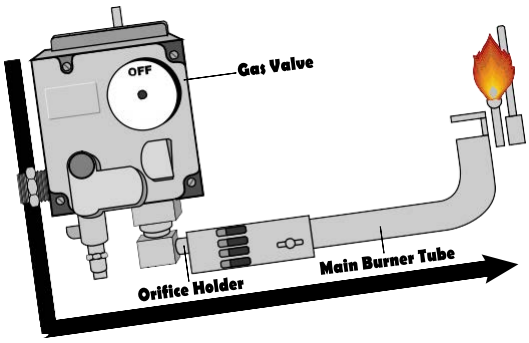

(Orientation found in pilot water heater)

Main Burner Alignment

The manifold and main burner should be as perfectly aligned as possible. In other words, the gas valve should be rotated at the same angle as the main burner tube. If it is not, rotate the gas control and/or the orifice holder so that the orifice disperses gas straight down the center of the burner tube. If the valve must be backed off any, check for water leaks at the coupling the control screws into before you operate the water heater.

DOMETIC

1120 North Main Street • Elkhart, IN 46514
PHONE: 574•264•2131 FAX: 574-206-9713
INTERNET: http://www.atwoodmobile.com

Pilot Water Heater TROUBLE SHOOTING GUIDE

Effective: 2/10/14

Guides are only intended for use on Dometic products by service technicians who have successfully completed Dometic training. This guide should be used in conjunction with the appropriate Instruction Manual provided with the product and any applicable Industry standards. This is not intended to be a complete list. Please direct questions concerning service of Dometic to 866-869-3118 before proceeding.

CAUSE	SOLUTION
PILOT OUTAGE	
Gas pressure incorrect	Set pressure to a minimum of 11”wc with two or more appliances running
Blocked “U” tube	Remove obstruction
Improper main burner alignment	Re-align main burner and main burner holder and gas valve
Improper air adjustment	Adjust main burner air shutter to approximately ¼ open
Weak thermocouple	Replace thermocouple
Poor pilot flame	Clean or replace pilot orifice
Weak gas control magnet	Replace gas control
Defective E.C.O. in control	Replace gas control and check the pilot flame. It should be high enough to engulf the Thermocouple at all times.
PILOT OUTAGE WHEN BUTTON OR KNOB IS RELEASED	
Thermocouple not hot	Hold button or knob for 30 seconds before releasing
Thermocouple loose	Tighten connection at gas control
Weak thermocouple	Replace thermocouple
Weak gas control magnet	Replace gas control
Defective E.C.O. in control	Replace gas control
MAIN BURNER WILL NOT IGNITE	
Blocked main burner orifice	Clean or replace orifice
Flame spreader misaligned	Square flame spreader to the end of main burner
Blocked main burner	Remove blockage
Improper air adjustment	Adjust main burner air shutter to approximately ¼ open
Blocked “U” tube	Remove blockage
Gas control out of calibration	Replace gas control
ERRATIC MAIN BURNER FLAME	
Improper gas pressure	Set inlet pressure to a minimum of 11”wc with two or more appliances running
Improper air adjustment	Adjust main burner air shutter to approximately ¼ open
Partial blockage of main burner	Remove blockage
Partial blockage of main burner orifice	Clean and replace orifice
Flame spreader misalignment	Re-align spreader or replace main burner
Blockage in “U” tube	Remove blockage
Poor gas supply	Replace gas supply
Exhaust grille blocked	Remove blockage
Improper main burner alignment	Re-align main burner, main burner orifice holder and gas valve
SMOKING AND SOOTING	
Gas pressure incorrect	Set pressure to a minimum of 11”wc with two or more appliances running
Poor gas supply	Replace gas supply
Improper pilot flame	Clean or replace pilot orifice
Improper air adjustment	Adjust main burner air shutter to approximately ¼ open
Flame spreader misaligned	Re-align or replace main burner
Blocked main burner	Remove blockage
Improper main burner alignment	Re-align main burner orifice holder and gas valve
Blocked “U” tube	Remove blockage
INSUFFICIENT WATER TEMPERATURE	
Temperature selector out of place	Re-set to desired position
Bypass levers improperly positioned	Reposition levers
Improper air adjustment	Adjust main burner air shutter to approximately ¼ open
Partial main burner blockage	Remove blockage
Improper main burner alignment	Re-align main burner and main burner orifice holder
Flame spreader misaligned	Re-align or replace main burner
Blocked “U” tube	Remove blockage

Engine Heat Exchange System

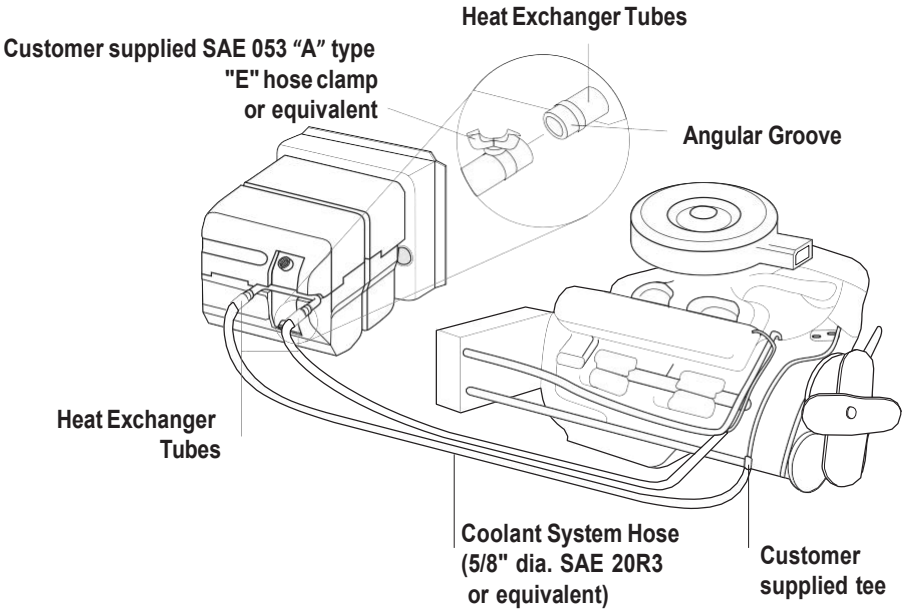

The engine heat exchange system allows a motor home to heat the water while traveling. This convenient option allows you to arrive at your destination with hot water. Operating a pilot or electronic water heater on gas while in transit is a dangerous practice and will void your Dometic warranty on the heater.

This system consists of a U-shaped aluminum tube that is attached to the outside of the tank with welds. SAE hoses are attached to both ends of this tube and are spliced into the engine coolant system.

When the engine is running, the hot coolant flows past the tank through this tube and by means of heat transfer through the welds, heats the water. The design of this system will not allow the water to reach a boiling point.

Aftermarket Heating Elements

WARNING
EXPLOSION / BURN INJURY

- Aftermarket heating elements can lack critical safety controls.
- Use of these devices can lead to an out of control heating of water tank and a catastrophic wet side explosion.

YOU DO NOT NEED AN AFTERMARKET HEATING ELEMENT ON AN DOMETIC WATER HEATER. THE USE OF AFTERMARKET HEATING ELEMENT DEVICES MAY ALSO RESULT IN DAMAGE TO COMPONENTS OR WATER HEATER. Dometic’s written warranty states - “failure or damage resulting from any alteration to our water heater is the owner’s responsibility”. **ANY ALTERATION, SUCH AS THE ADDITION OF AN AFTERMARKET HEATING ELEMENT DEVICE, WILL VOID THE WARRANTY.**

- Temperatures produced by these heating elements can exceed the 190˚F. Limiting of the ECO on pilot model gas control valves. This gas control valve contains a one-shot ECO. When this ECO blows, the control is completely non-functional and must be replaced.
  THIS IS A NON-WARRANTABLE SITUATION.
- When Aftermarket heating elements are inserted into the drain plug, customers are more prone not to flush their tanks. Not flushing the tank accelerates tank corrosion on both our pilot and electronic ignition water heaters creating a situation where the tank may have to be replaced. **THIS IS A NON-WARRANTABLE SITUATION.**

BOLT-IN

Heating Element, Thermostat & ECO

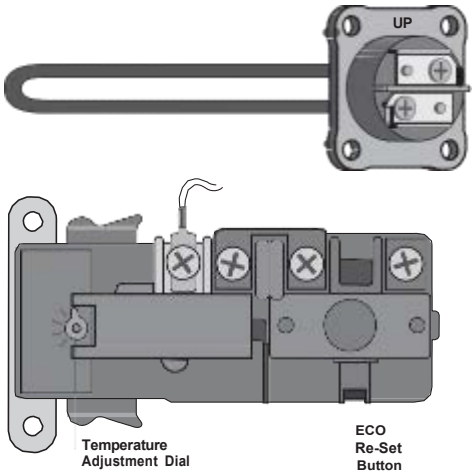

110VAC Trouble-Shooting

Wiring Schematic

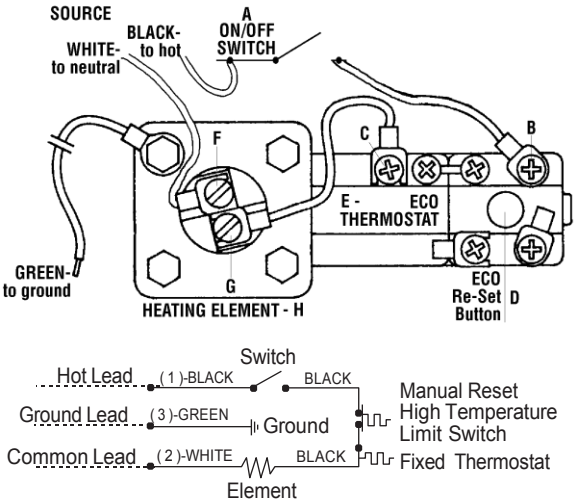

Early model water heaters with 110 VAC heating capacity used a bolt-on heating element and a one piece thermostat/E.C.O.

This 110 VAC system has an adjustable rectangular thermostat that is surface mounted to the inner tank and retained by a steel clip. The temperature settings are HI, MEDIUM, and LOW. If the thermostat is making unobstructed contact with the aluminum tank and it is set to the HI position, it should heat the water to 130° F. It will take longer to heat a tank of water on electric than gas.

The heating element was changed in 1996 from 1500W to 1400W bringing the amperage draw down to 12.7 amps and allowing more cushion for the 15 amp circuit breaker that is normally placed in line. This change adds a few minutes to the heating time.

There are 110 VAC aftermarket conversion kits being offered by distributors in which the heating element is screwed into the tank where the drain plug is located. We do not offer such a kit. Our kit includes the tank with the 110 VAC components already installed in it.

In the case where the 110VAC portion of the water heater is not heating water, the following diagnostic steps and repairs should be investigated:

Turn POWER OFF to the appliance before removing junction box cover.

Perform the following steps with POWER ON to water heater.

1. Verify switch-A is in ON position.
2. Insure there is 110VAC to the unit (measure voltage across the black and white lead to the appliance with POWER ON). If none, trace wiring back and make appropriate wire repair.

Perform the following steps with POWER OFF to water heater.

3. ECO Re-set Button-D should be depressed.
4. Check for continuity between screw-B and screw-C of thermostat. If none, replace thermostat.
5. If water is insufficiently hot, check ECO / Thermostat-E is on high.
6. Verify a good wire connection between thermostat screw-C and heating element screw-G. Correct if necessary.
7. There should be continuity between heating element screw-G and screw-F. If none, element is bad and should be replaced. Do not over-tighten self-tapping screws when installing new element.
8. Check for continuity between element screw-G and flange of element. If there is, element has shorted. Element should be replaced.
9. Verify ground connection.

NOTE: Heating element can be operated on an empty tank for a limited period of time before it self-destructs.

SCREW-IN

Heating Element, Thermostat & ECO

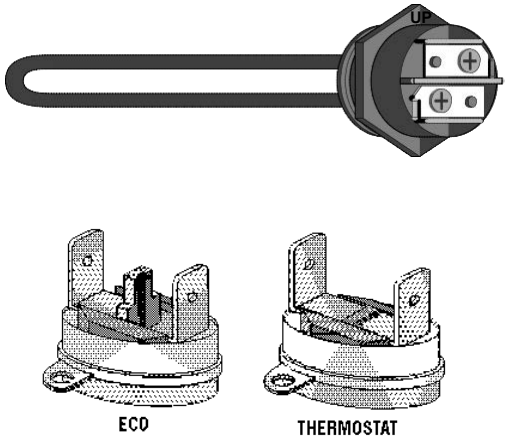

Current production water heaters, with the 110VAC heating option, use a screw-in heating element, a separate pre-set thermostat and a separate ECO.

The screw-in heating element is rated at 1400 watts just like the bolt-on element. It is an incalloy element and can be run for a limited amount of time in a dry tank without shorting out. However dry firing a water heater may also damage your PTR valve and this damage is not covered under warranty.

CAUTION: If the heating element is allowed to run with a dry tank, allow the tank to cool down for 2-3 hours before adding water. Adding water before the tank cools sufficiently could collapse the tank.

The thermostat and ECO are pre-set surface-mounted discs. The thermostat is set at 140° F and is the same thermostat used on the gas side of the electronic ignition water heaters. The ECO is a backup thermostat and will trip if the thermostat fails and the water temperature exceeds 170° F.

110VAC Trouble-Shooting

Wiring Schematic

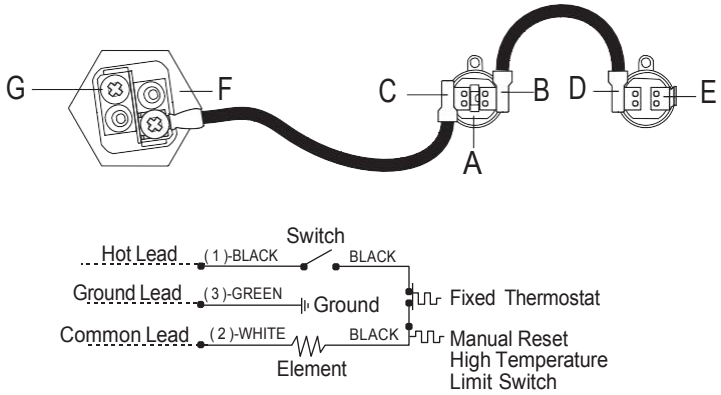

When the 110VAC portion of the water heater is not heating water, the following diagnostic steps and repairs should be investigated:

Turn POWER OFF to the appliance before removing junction box cover.

Perform the following steps with POWER ON to water heater.

1. Verify switch is in ON position.
2. Insure there is 110VAC to the unit (measure voltage across the black and white lead to the appliance with POWER ON). If none, trace wiring back and make appropriate wire repair.

Perform the following steps with POWER OFF to water heater.

3. Manual reset ECO high limit switch-A should be depressed. Check for continuity between TERMINAL B and TERMINAL C of ECO.
4. Check for continuity between TERMINAL D and TERMINAL E of thermostat. If there is none, replace thermostat.
5. If water is insufficiently hot, insure thermostat is flush with tank.
6. Verify a good wire connection between ECO TERMINAL-C and heating element TERMINAL-F. Correct if necessary.
7. Check for continuity between heating element TERMINAL-F and TERMINAL-G. If none, element is bad and should be replaced. Do not over-tighten self-tapping screws when installing new element.
8. There should **NOT BE CONTINUITY** between element screw-G and flange of element. If there is, element has shorted. Element should be replaced.
9. Verify ground connection.

NOTE: Heating element can be operated on an empty tank for a limited period of time before it self-destructs.

Electronic Ignition Models

QUESTIONS

The following questions should be answered during this portion of the manual:

- What is minimum gas pressure for proper water heater operation?
- Where on the gas solenoid valve can gas pressure be tested?
- What is the minimum voltage needed for operation?
- What is the proper wiring hook-up for the water heater circuitry?
- Can the Circuit Board Tester be used on both Fenwal and Channel circuit boards?
- How can the Circuit Board Tester be used to check a "flying lead" circuit board?
- What conditions can cause tracks on the back of the circuit board to blow?
- What is a proper main burner air shutter adjustment?
- What is the function of the thermal cut-off?

Dometic 6 and 10 Gallon Electronic Ignition Water Heaters

Dometic water heaters are designed and approved for use only in recreation vehicles (travel trailers, 5th wheels, motor homes, etc.). They are offered in two sizes: 6 and 10 gallon capacities.

TYPE OF GAS IGNITION -
This unit is ignited inside of the trailer by a remote ON/OFF switch. The water temperature is preset at 140° F.

EXPLANATION OF MODEL NUMBER:

Electronic Models

G C H 6 AA - 10 E

- E → Electronic Ignition
- 10 → Version
- AA → Type of heating element
- 6 → Gallon capacity (6 or 10)
- H → Engine heat exchange
- C → Combination gas and 110VAC electric
- G → Propane Gas

NOTE: When replacing the element on a combination gas/110 VAC unit, always check the back of the heater for the type of element it has. It will either be a bolt-on or screw-in element. They are not interchangeable.

FEATURES

- All units operate on propane gas.
- A pre-set thermostat set for 140° F. An aftermarket retro-fit adjustable thermostat is available Which is adjustable from 110° to 150° F.
- A heat exchange option is available. The water heater tank must have factory equipped heat exchange tubes welded on it already. They cannot be added later. A new water heater tank with this feature must be installed to use the heat exchanger. Some models are only available in the aftermarket with the heat exchange option, if you do not need the heat exchange you do not need to cap it off.
- Skin mounting allows water heater to be hooked up with plumbing & electrical before the sidewall is erected.
- This heater has a comparable, if not superior, anode type protection for the tank. The tank is manufactured with a clad aluminum lining that protects against corrosion but does not need to be replaced yearly as an anode rod; therefore, adding an anode is unnecessary and can result in voiding the warranty on the water heater. A more detailed explanation of cladding is found in the back of this manual.
- 95% of all servicing is done on the outside of the water heater. 110 VAC heating components are the exception. Since they are located on the back of the water heater inside the trailer.
- A flush flange is available for all models. This makes the access door flush with the sidewall.
- The water heater has protection features that include a pressure-temperature relief valve and a limit switch in the gas thermostat (ECO).
- Both the six and ten gallon units have the lightest weight in the industry.
- The Dometic Limited Warranty is for a period of two years to the original owner.
- There are over 1,000 Service Centers throughout the United States which can be found on our website www.dometic.com under the heading “Dealer Locator”

XT Electronic Models Only

G E H 9/16 - E XT

- XT → Exothermal Technology
- E → Electronic Ignition
- 9/16 → Effective capacity (water heater size 6 or 10)
- H → Engine heat exchange
- E → Electric 110 Volt A/C
- G → Propane Gas

FEATURES

- Provides 50% more hot water without increasing the size or adding weight using a pre-set thermostat set for 155°F. used exclusively in the XT water heater.
- Pre-configured winterizing capability. The valve, hose, tee and thermostatically-controlled mixing valve, with

a check valve and a cold water passage, allows you to isolate and drain the tank and pump antifreeze through the plumbing circuit.

Recommended Tools and Equipment

U-Tube Manometer - This is the most accurate device for measuring gas pressure. If you use a dial-type manometer, calibrated it periodically.

Multi-meter - This is the most versatile meter and will test continuity and 12VDC. These tests will allow one to verify voltage problems or faulty components. The entire electronic system can be tested with this meter.

U-TUBE MANOMETER
with 1/8" pipe nipple

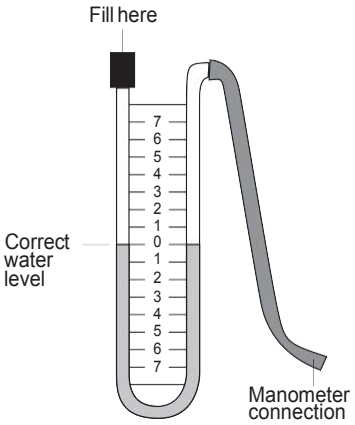

MULTI-METER TO TEST CONTINUITY & VOLTAGE

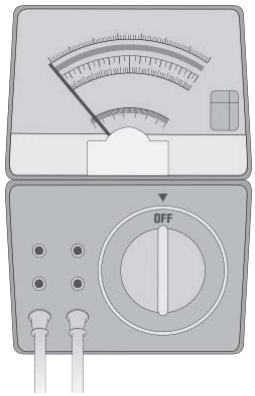

Circuit Board Tester - The tester is capable of testing any of the circuit boards (Fenwal and Channel models) that we have used on our water heaters. It is a simple table top device that will diagnose the following items on a circuit board: power circuit, sense circuit, spark generation and the lock-out mode. For use on circuit boards with a flying lead connection, splice a wire into the black wire of the tester harness with a 1/4″ male terminal on the free end.

CIRCUIT BOARD TESTER

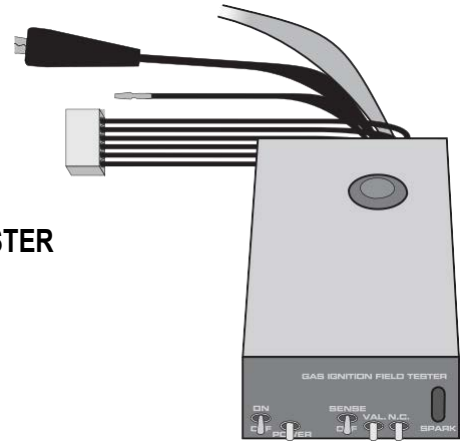

Common Hand Tools - 1/8″ and 1/4″ nut drivers, open end wrenches, flat blade and Phillips screw drivers.

Leak Test Solution - A solution that bubbles when applied to gas fittings or connections showing where a gas leak is present.

DSI Sequence of Operation

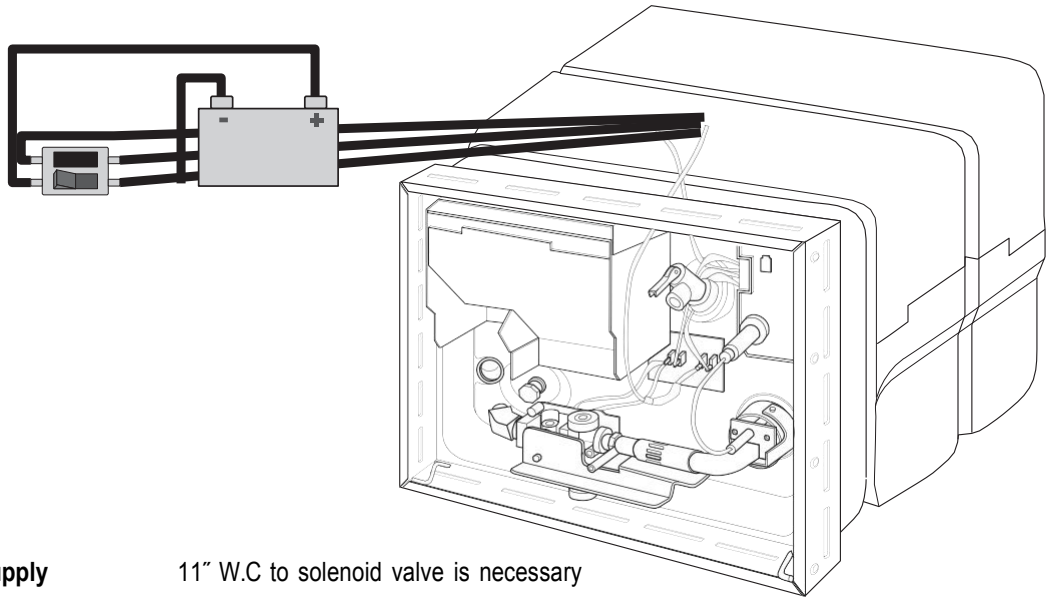

- **Gas Supply** — 11″ W.C to solenoid valve is necessary
- **12VDC Battery or filtered side of Convertor** — Voltage source to water heater
- **ON/OFF Switch** — It supplies 12VDC to water heater
- **Thermal Cut-Off** — A one shot heat sensing fuse that's normally closed and sends power to the thermostat. When tripped by excessive heat (190°F), (i.e. blocked burner or flue tube) it cuts power to the circuit board and shuts down ignition. This is a sacrificial part, similar to a fuse, and therefore is not covered under manufacturer warranty.
- **Thermostat** — A normally closed non-adjustable temperature switch that sends current to the circuit board. It opens when the water temperature reaches approximately 140°F. (155 on XT models)
- **Circuit Board** — The next step is the direct spark ignition system. For a period of 6-8 seconds the circuit board will send voltage to both the gas solenoid valve and the electrodes. The board is a 3 try for ignition. If ignition does not occur after three tries, the board goes into a lock-out condition and the non-ignition light illuminated at the ON/OFF switch.

• E.C.O.

Is a normally closed safety temperature switch that sends voltage to solenoid valve. The switch opens if the water temperature exceeds 180°F.

• Gas Valve

The dual solenoid valve that opens and sends gas through the main burner for ignition when a minimum of 10.5 VDC is applied.

• Electrodes

Creates a spark to ignite gas. If the electrodes do not sense a flame in 6-8 seconds, a signal is sent to the board to shut the gas valve down and the system goes into safety lock-out.

NOTE: If this situation exists, the ON/OFF switch must be turned off and back on again.

DOMETIC
1120 North Main Street • Elkhart, IN 46514
PHONE: 574•264•2131 FAX: 574-206-9713
INTERNET: http://www.atwoodmobile.com

Electronic Ignition Water Heater TROUBLE SHOOTING GUIDE

Effective: 2/10/14

Guides are only intended for use on Dometic products by service technicians who have successfully completed Dometic training. This guide should be used in conjunction with the appropriate Instruction Manual provided with the product and any applicable Industry standards. This is not intended to be a complete list. Please direct questions concerning service of Dometic to 866-869-3118 before proceeding.

CAUSE	SOLUTION
WATER HEATER LOCK OUT - SPARK PRESENT BUT NO GAS	
Gas pressure incorrect	Set inlet pressure at a minimum of 11"wc with two or more appliances running
Low voltage	Correct power supply-10.5VDC minimum
Blocked main burner tube	Clean burner tube
Blocked main burner orifice	Clean or replace orifice
Loose wires on ECO	Secure wire connections
Loose wire connection on solenoid valve	Secure wire connections
Loose valve wire on wiring harness	Repair wire on pin connector or replace wiring circuit board harness
Defective ECO	Replace ECO
Defective circuit board	Check for "dirty" voltage or replace circuit board
Defective solenoid valve	Replace solenoid valve
No gas to solenoid valve	Correct gas supply
Dirty connector on circuit board	Clean pin connector
WATER HEATER LOCK OUT - GAS PRESENT BUT NO SPARK	
High tension lead wire loose	Secure wire connection on circuit board
Electrodes loosely attached to main burner	Secure electrodes to main burner
Improper electrode gapping	Re-position spark gap to 1/8″ and into path of flame
Dirty electrodes	Clean electrodes
Wires loose in electrode porcelain	Replace electrodes
Cracked porcelain on electrode	Replace electrodes
Defective circuit board	Replace circuit board
WATER HEATER LOCK OUT - GAS AND SPARK PRESENT	
Gas pressure incorrect	Set inlet pressure at a minimum 11″wc with two or more gas appliances running
Low voltage	Correct power supply - 10.5 VDC minimum
Poor electrical ground	Secure electrical ground
Electrodes out of flame pattern	Re-adjust electrodes
Electrodes sparking to screw fastening burner to flue tube	Adjust electrodes away from screw
Dirty electrodes	Clean electrodes
Partial obstruction in main burner	Clean main burner
Partially obstructed main burner orifice	Clean main burner orifice or replace
Improper air adjustment	Adjust main burner air shutter approximately 1/4 open
Flame spreader on main burner misaligned	Adjust flame spreader so that it is aligned square to the end burner tube
Manifold not aligned with main burner	Re-align solenoid valve with main burner
Partially opening solenoid valve	Replace solenoid valve
Defective circuit board	Replace circuit board

continued

CAUSE	SOLUTION
EXCESSIVE OR INSUFFICIENT WATER TEMPERATURES	
By-pass kit valves not set properly	Place valves in proper position
Thermostat not seated against tank	Reseat thermostat
Defective thermostat	Replace thermostat
ERRATIC BURNER FLAME OR SOOTING	
Low gas pressure	Set inlet pressure at a minimum 11˝ W.C. with two or more gas appliances running
Poor gas supply	Replace gas supply
Improper air adjustment	Adjust main burner air shutter to approximately 1/4 way open flame should be mainly blue and quiet.
Poor main burner alignment	Adjust valve and main burner alignment
Misaligned burner flame spreader	Align flame spreader so it is square with end of burner tube
Blocked burner orifice	Clean orifice **DO NOT enlarge orifice**
Obstructed main burner	Clean main burner
Obstructed “U” tube	Clean “U” tube
Obstructed exhaust grille	Remove obstruction
NO SPARK AND NO GAS	
No voltage	Correct power supply - minimum 10.5 VDC
Dirty pin connector on circuit board	Clean pin connector
Defective thermal cut-off	Replace thermal cut-off
Defective ON/OFF switch	Replace switch
Defective circuit board	Replace circuit board
Defective thermostat	Replace thermostat

DOMETIC
1120 North Main Street • Elkhart, IN 46514
PHONE: 574•264•2131 FAX: 574-206-9713
INTERNET: http://www.atwoodmobile.com

INTERMITTENT IGNITION
Electronic Ignition Water Heater

INFORMATIONGUIDE

Effective: 2/10/14

Guides are only intended for use on Dometic products by service technicians who have successfully completed Dometic training. This guide should be used in conjunction with the appropriate Instruction Manual provided with the product and any applicable Industry Standards. This is not intended to be a complete list. Please direct questions concerning service of Dometic products to 866-869-3118 before proceeding.

1. **CHECK ALL OF THE WIRE CONNECTIONS**.
   Poor or corroded wire connections cause most of the intermittent problems in water heaters. You should go through and pull all of the wires off any spade connections. Then reconnect them and ensure the connections are tight and corrosion free.

   We want to point out two connections often overlooked.

   First, check the (green) ground wire of the circuit board. This ground is screwed into the side of the flue box. If this is not tight you may not have a secure ground.

   Second, check the four wire pin connector going into the circuit board. Remove the pin connector from the board. Inspect the pins on the board for corrosion. If corrosion is present remove it then reinstall pin connector onto the board.

2. **CHECK THE INTEGRITY AND POSITION OF THE SPARK PROBE ASSEMBLY**.

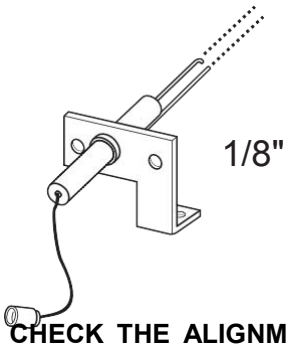

The gap between the sparking probe and the ground probe should be 1/8 inch. The probes should be clean and free of cracks, flaking and corrosion. Position the probes so that they are in the path of the gas flow. Cracks in the ceramic insulator can also be the source of an intermittent problem. To check for cracks insert a fiber washer or any other type of insulation material in the 1/8” gap between the rods.
Remove the gas valve from the circuit and turn the unit on. If you see a spark jumping from the ceramic to the ground rod or bracket, replace the spark probe.

3. **CHECK THE ALIGNMENT OF THE MAIN BURNER TO THE ORIFICE**. Position the main burner tube (A) so that the gas coming out of the orifice (B) is going straight down the middle of the burner tube. If the alignment is off, the gas will bounce down the tube which will alter the gas flow once it reaches the spark. Manually shift the valve (C) with your hands to achieve this alignment.

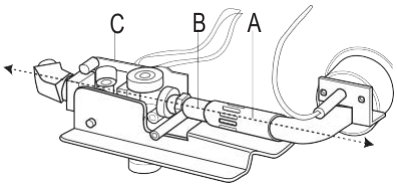

4. **CHECK THE ALIGNMENT OF THE FLAME SPREADER ON THE BURNER TUBE**.

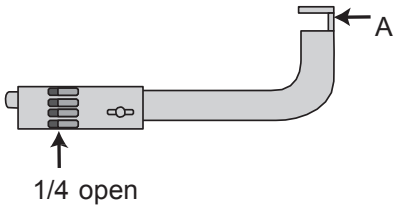

At the end of the burner tube there is a dime-shaped deflector disk. This disk spreads the flame out for proper heat distribution.
Align the flame spreader (A) so that it is parallel to the end of the tube and positioned in the center of the end of the tube. If the flame spreader is out of position, it could divert the gas away from the spark and cause intermittent ignition.

continued

5. **CHECK THE AIR ADJUSTMENT**.
   The burner tube has an adjustable air shutter on it at the end where it goes over the orifice. Position the air shutter so that it is 1/4 of the way open. We are looking for a blue flame with small traces of yellow in the flame. If the flame is fairly quiet then it is adjusted correctly.

6. **CHECK THE CLEANLINESS OF THE ORIFICE**.
   The orifice is the hex head brass fitting that is screwed onto the brass manifold of the valve. You will have access to this part once the burner has been removed. Remove the brass orifice and clean with isopropyl alcohol. **NEVER** enlarge the size of the orifice.

7. **CHECK FOR OBSTRUCTIONS IN THE MAIN BURNER TUBE**.
   The cleanliness of this tube is very important. Spider webs, soot and other debris can accumulate, causing problems with gas flow down the tube. We recommend cleaning the burner tube with a brush and not compressed air. Compressed air may not fully remove the obstruction. Dometic offers for your convenience a full maintenance kit equipped with tools designed for this type of maintenance.

8. **CHECK THE CLEANLINESS OF THE FLUE TUBE**.
   The flue tube is the 2-1/2 inch diameter tube that starts at the bottom right corner of the water heater (where the main burner flame enters) and comes out the top left. This tube can become blocked by debris like insect nests or soot. To clean remove the metal flue box in the top left corner of the water heater. To facilitate cleaning unfold a wire hanger, wrap a rag around the end and use this to swab out the tube. Dometic offers for your convenience a full maintenance kit equipped with tools designed for this type of maintenance

9. **CHECK THE VOLTAGE TO THE VALVE**.
   Make sure that the voltage to the gas solenoid valve is between 10.5 and 13.5 volts DC. Voltage drops can occur at almost any component. Turn on another twelve volt appliance when you check the voltage so that you can see how the converter is working with a load. The voltage itself can be intermittent. With linear converters the 12 VDC varies depending on the 115 VAC. If the 115 VAC is high then the 12 VDC will be high, and if the 115 VAC is low then the 12 VDC will be low. If the power to the water heater is connected to the unfiltered side of the converter, move it to the filtered side.

10. **CHECK THE GAS PRESSURE OF THE RV**.
    Make sure the gas pressure of the RV is checked with preferably the furnace and the range on to simulate a load. The pressure should be 11 inch water column under load. Besides gas pressure being at the proper level there are other strange things that can happen inside gas lines that cause intermittent problems. We have seen oil build up in a gas line that meant there was good pressure to one appliance but not the correct pressure to another appliance. Moisture could also build up in the gas line that would freeze and partially block the line. Intermittent pressure from the regulator of the bottles is still another area that should be investigated.

11. **INTERMITTENT CIRCUIT BOARD**.
    If you have gone through all of the above checks and the intermittent problem is still occurring, only then check the circuit board. Ensure the circuit board is clean and reasonably moisture free before you change it.

There are two major points that should have stood out to you from this list.

First, the majority of intermittent ignition problems on Dometic electronic ignition water heaters can be corrected by cleaning certain components or making simple adjustments.

Second, ignition problems can be found in other components than the circuit board. The circuit board is not the end all solution to ignition problems. This mindset developed a number of years ago with the introduction of the first circuit boards that were not very reliable. We've learned a lot since then. Technology has progressed making today's circuit boards very reliable. The circuit board can only do what the other components of the water heater allow it to do.

**POTTED CIRCUIT BOARDS

Dometic **potted circuit boards can be tested using a multi-meter. This test must be performed with the circuit board removed, and the meter set to the ohms scale. This will check the continuity of all tracks on the harness connection of the board.

The following steps should be used to test each track.

A. Cross leads of meter to ensure it is registering continuity.

B. **TO TEST POWER TRACK**:
Place negative lead of the multi-meter to ground (green wire) track of edge connection and positive lead of the multi-meter to top power (brown wire) track of edge connection. If no continuity, board is defective. *Dometic does not warranty this installation related failure.

C. **TO TEST LAMP TRACK**:
Place negative lead of the multi-meter to ground (green wire) track of edge connection and positive lead of the multi-meter to lamp (blue wire) track of edge connection. If no continuity, this indicates blown lamp track. Circuit board will still fire unit but lamp light will not come on. This is caused by a short in the blue wire between the unit and the switch. Wiring must be corrected before the board is replaced. *Dometic does not warranty this installation related failure.

D. **TO TEST VALVE TRACK:**
Place negative lead of the multi-meter to ground (green wire) track of edge connection and positive lead of the multi-meter to valve (red wire) track of edge connection. If no continuity, this indicates a blown valve track.
- If the valve wire is shorting under the flue box – Dometic will warranty the board.
- If the E.C.O. terminals are contacting the drawn pan – Dometic will warranty the board only if the inner tank of the water heater was installed flush on the floor of the coach.
- If the inner tank of the water heater does not rest flush against the floor of the coach –*Dometic does not warranty this installation related failure.

* Installation related failures on circuit boards are the responsibility of the coach manufacturer.

** Non potted circuit boards can be checked by turning the board over and visually inspecting each track for a burn mark or break in the track itself. A burn mark or broken track indicates the board is blown. Depending on which track is blown determines whether it is covered under Dometic's warranty as stated in section B, C and D.

THERMAL CUT-OFF DEVICE

Current Dometic direct ignition water heaters are equipped with a thermal cut-off device. This device is located on the incoming power wire and is connected to the thermostat. The thermal cut-off is designed to permanently break circuit and shut down the water heater before excessive heat can cause damage due to obstructions in the main burner tube or flue tube caused by spiders or mud wasps. These obstructions can cause the main burner flame to burn outside the main burner tube. When the flame or the heat from the flame contacts the thermal cut-off, the circuit will open.

If there is **no heat damage** to the thermal cut-off, and if it is determined defective, Dometic will cover the replacement of this device under warranty. We will allow .25 hour at your Dometic approved warranty rate. If there **is heat damage** the device performed its safety feature and no warranty labor will be allowed. Any obstructions should be removed, alignment checked and gas pressure taken before a new thermal cut-off is installed.

Note: When replacing a thermal cut-off, also examine the grill in the access door while the door is in the closed position. The wide aluminum band of the grill should be at the bottom. If it is at the top, this condition may trap exhaust heat and possibly also cause thermal cut-off to trip. To correct, remove the grill from the door and snap back in place with the wide aluminum band at the bottom.

THERMOSTAT

The thermostat on this water heater is pre-set at 140° F. The water heater will cycle off when the water temperature reaches 140° F. and will generally take 20-25 minutes to reach this temperature. It will cycle back on when the water temperature cools down to approximately 115° F. In the latter part of the heating cycle though, it is very common for the pressure-temperature relief valve to weep. Refer to the page covering weeping relief valves to remedy this situation.

If a customer is dissatisfied with the temperature of the water, first check the water temperature with a cooking thermometer and verifying that the initial cycle is within the time noted above. If not, an adjustable thermostat may be purchased allowing the water temperatures to be adjusted from 110 - 150° F. It fits in place of the original thermostat.

Water Heater Wiring Schematics

Wiring Schematic
G6A-2E, G6A-3E, GH6-4E,
GH6-3E Water Heaters
(Rear Mount ECO and
Thermostat Models).

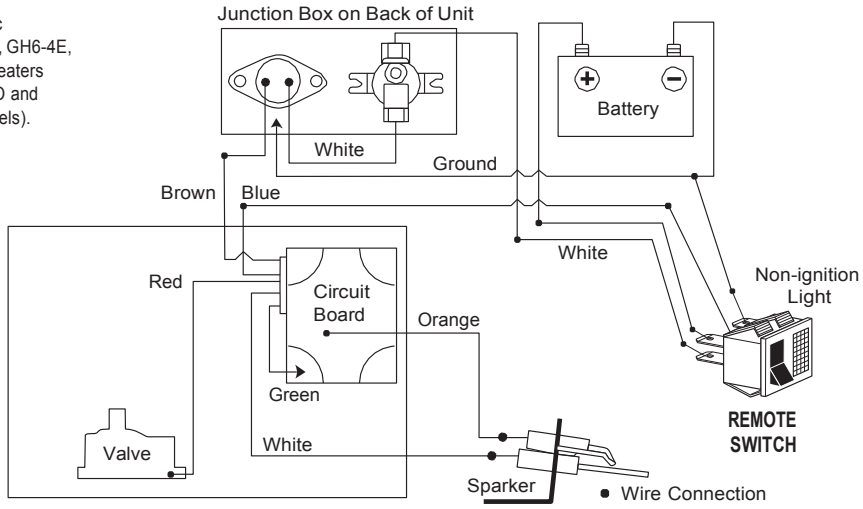

Wiring Schematic G6A-3E,
G6A-4E, GH6-3E, GH6-4E,
GCH6-4E, G6A-6E, GCH6-6E,
GH6-6E Water Heaters
(Front Mount ECO and
Thermostat Models).

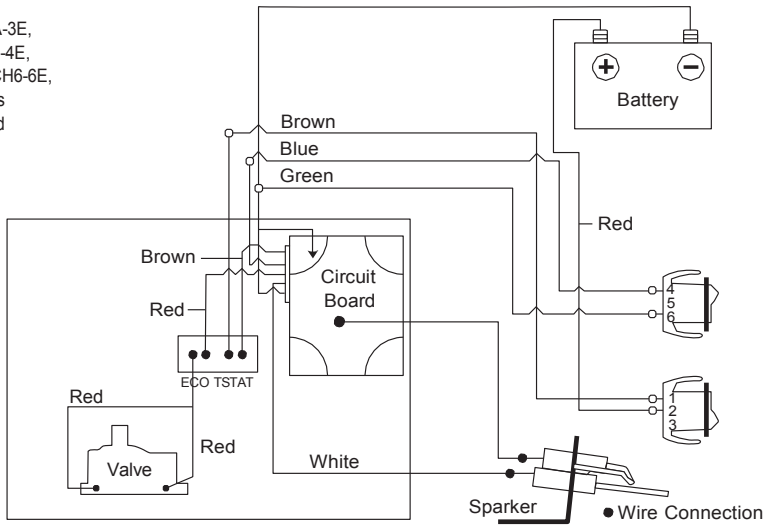

Wiring Schematic G6A-7E, GH6-7E,
GC6A-7E, GCH6-7E, GC6AA-7E, G6A-
8E, GH6-8E, GC6AA-8E, GCH6AA-8E,
GCH6A-9E

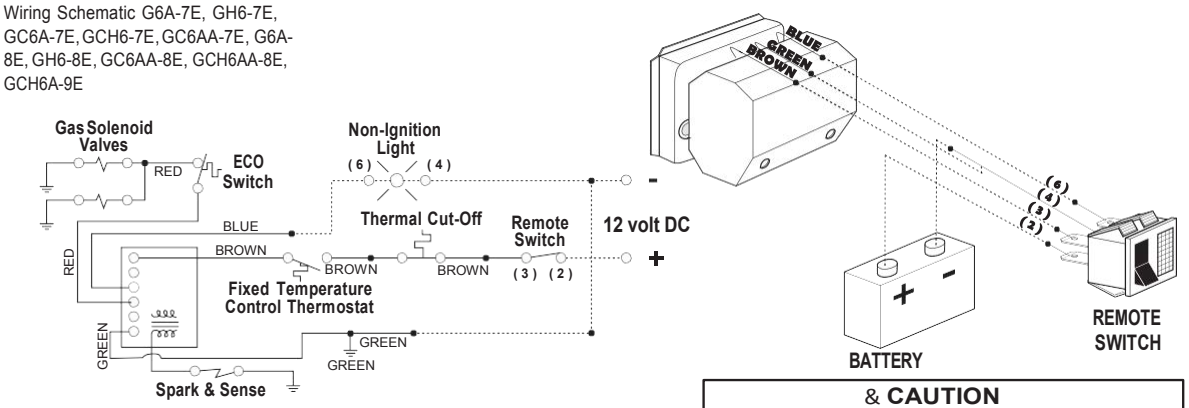

Dotted lines are wired by customer

& CAUTION

When servicing controls, label all wires prior to disconnection.
Wiring errors can cause personal injury or property damage.
Verify proper operation after servicing.

GC 10A-4E & GC 6A-10E Wiring

In 2003, Dometic created a new gas-electric water heater. These units improve serviceability by moving most of the components for the electric portion of the water heater to the outside except the element and relay, which remain in a junction box in the rear. One module board controls both gas and electric.

When replacing a 3E or 9E to a 4E or 10E some wiring changes are necessary. See the INFORMATION NOTICE that follows.

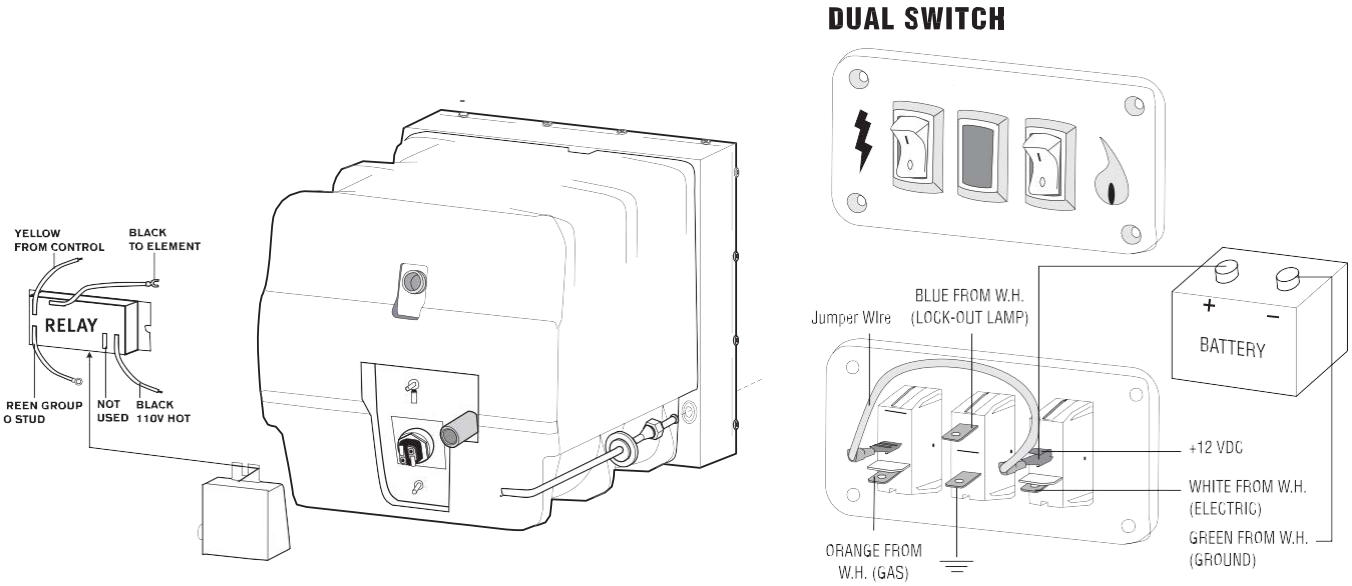

WIRING DIAGRAM COMBINATION GAS/ELECTRIC

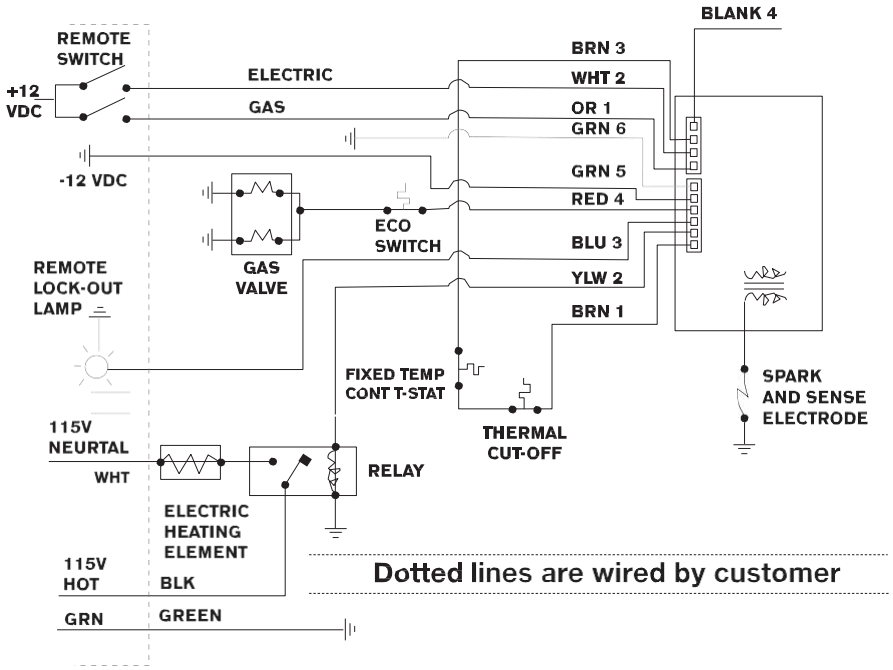

INFORMATION NOTICE

Dometic Water Heater Conversion

DOMETIC

1120 North Main Street • Elkhart, IN 46514
PHONE: 574•264•2131 **FAX**: 574-206-9713
INTERNET: http://www.atwoodmobile.com

GC10A-3E to GC10A-4E
GC6A-9E to GC6A-10E

ENGLISH, **• Switch Conversion Instructions**

Effective 1/16/07

The gas/electric water heater (Models 4-E & 10-E) replaced all previous combination gas/electric water heaters. Models 3-E & 9-E and before operate on DC for the gas side and AC for the electric side.

These older models operate with two separate switches, one DC and one AC. The gas switch has DC voltage coming into the switch and from the switch to the water heater. There is a separate switch used for the electric portion of the water heater. This switch will have AC power coming into the switch and AC going out of the switch to the electric part of the water heater.

The 3-E and 9-E's are no longer available, if an entire water heater must be replaced it will be replaced with the new 4-E or 10-E. **There are no changes in the physical dimensions, but a wiring change will be required.**

With the new water heater you will receive a new 12 volt control switch for both gas and electric.

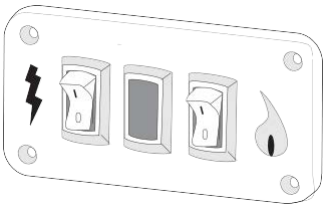

The separate gas and electric switches will be replaced by this (one) combo switch on current production.

CAUTION
PRODUCT DAMAGE

- Extreme care should be taken with all electrical wiring and professional services retained if necessary.

WIRING THE REAR OF THE WATER HEATER

The only AC required will be in the rear of the water heater at the relay and the element. See wiring below.

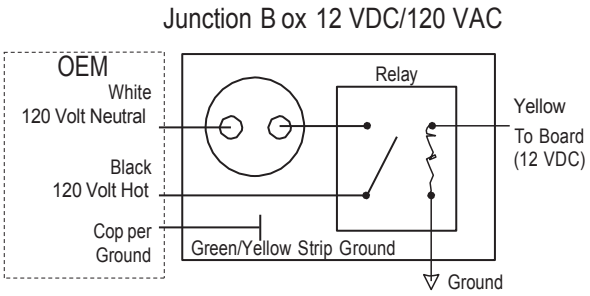

The electric switch and all other AC wiring, with the exception of the power into the back of the water heater, must be eliminated.

WIRING OF NEW COMBO SWITCH

The new combo switch will be wired, using the picture below.

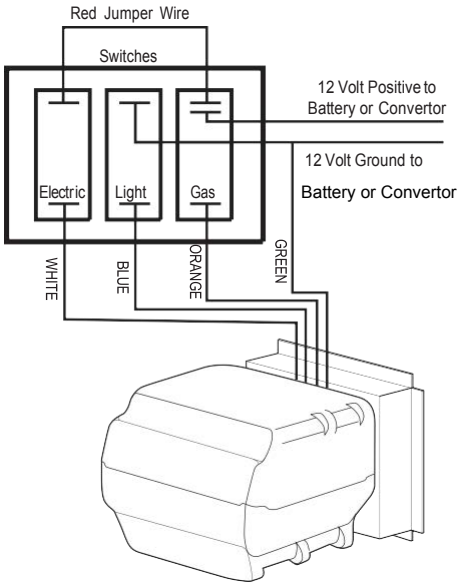

LOCATION OF COMBO SWITCH

Find the most convenient location for the new switch. It should be close to the DC voltage source that will control the switch. This may be where the AC switch was originally located. Remember that you will have to connect DC positive and negative into this switch. There will also be four wires from the water heater that must attach to the switch.

If your original system was controlled through a central monitor panel, and you prefer to use this system, you will have to contact the manufacture of the unit for monitor panel wiring instructions.

Location and phone numbers of qualified Service Centers can be found at our website http://www.dometic.com or call 866-869-3118 to have a Service Center List mailed.
Please remove that

Sequence of Operation
GC10A-4E & GC6A-10E

Power in When the wall switch is turned on to either gas, electric or both the power moves from the wall switch to the DSI board through the Molex connector.

1. Gas - When the wall switch (flame) is turned on for gas operation, the orange wire (OR 1) is energized with DC voltage.
2. Electric - When the switch (lightning bolt) is turned on for electric operation the white wire (WHT 2) is energized with DC voltage.

The power moves from the internal board circuits to the brown wire at the (BRN 3) connection.

From this point the power for gas, electric or both moves through the thermostat, thermal cut off and enters the board again at the lower (BRN 1) connection. This completes the circuit to the lower connection on the board.

When the switch for GAS ignition is turned on -

1. Power is sent to the coil on the board. The coil creates a spark for ignition.
2. Power is sent to (RED 4) connection. From this point, power flows through red wire, through the ECO and to the gas valve.

When the switch for ELECTRIC is turned on -

1. Power is sent from the board to the yellow wire (YLW 2). The yellow wire carries DC voltage to the relay in the back of the water heater. The 12 volt energizes the relay which sends the 110 V to the element.

Quick Diagnostic
GC10A-4E & GC6A-10E

Following the sequence of operation:

No power to board through the orange or white wire.

- Test for power into wall switch. If no power, check wiring, fuse, breaker, etc.
- If switch has power but does not work, check to see if switch is wired correctly. If switch is wired correctly, replace switch.

No power out of board at BRN 3.

- Confirm power entering the board at orange (OR1), white (WHT 2) or both with the switch on.
- Check Molex connector for proper connection.
- Bad board (replace).

No power at brown (BRN 1), when calling for gas or electric operation.

- Check thermostat for voltage or continuity. Replace if necessary.
- Check thermal cutoff for voltage or continuity. Replace if necessary.
- Confirm Molex connector is making contact.

No power through red wire from RED 4.

- Confirm power coming in at brown (BRN 1).
- Confirm Molex connector is making contact.
- Bad board (replace).

No power through yellow wire (YLW 2) to relay. Electric operation only.

- Confirm continuity from red (RED 4) at Molex connector to Valve Ground. If the ECO or Valve coils are open then the board will not send power to the yellow wire (YLW 2).
- Confirm power coming in the brown wire (BRN 1).
- Confirm Molex connector is making contact.
- Bad board (replace).

No power through relay (electric).

- Confirm AC present.
- Confirm DC through yellow wire (YLW 2).
- Check AC into element. No power, replace relay.
- Power into element from relay (no heat), replace element.

WIRING DIAGRAM COMBINATION GAS/ELECTRIC

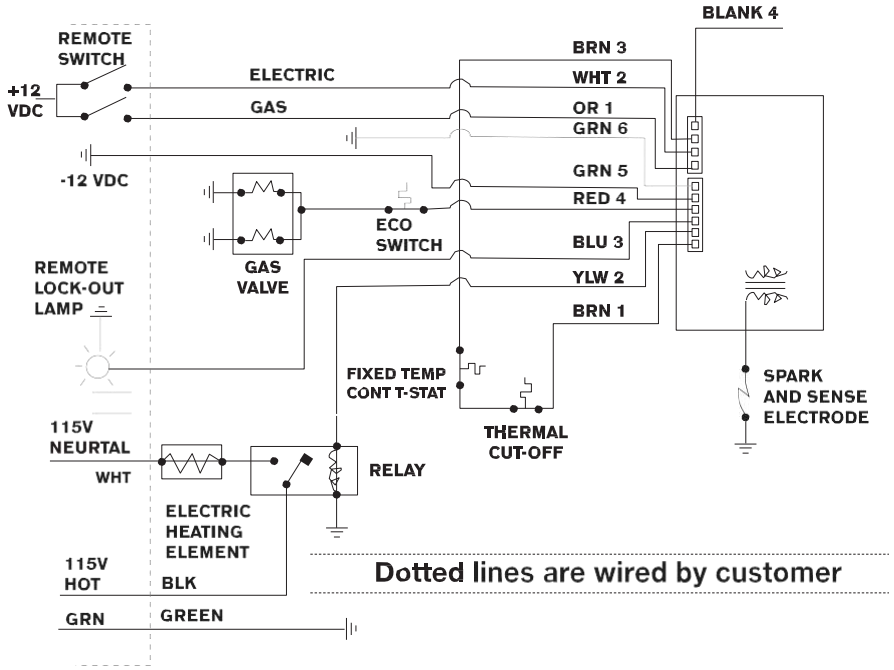

General Information

QUESTIONS

The following questions should be answered during this portion of the manual:

- What causes the pressure-temperature relief valve to weep when unit is in heating cycle?
- How can weeping pressure-temperature relief valves be reduced or eliminated?
- What are the proper draining procedures to help reduce lime deposits and extend tank life?
- Will a tank split for any other reason besides freezing?
- What functions do the retaining rings serve when replacing an inner tank?
- What are the most common ways to winterize a tank?

PRESSURE-TEMPERATURE RELIEF VALVE

Weeping or dripping of a pressure-temperature relief valve while the water heater is running DOES NOT mean it is defective. This is normal expansion of water as it is heated in the closed water system of a recreation vehicle. The Dometic water heater tank is designed with an internal air gap at the top of the tank to reduce the possibility of weeping and dripping. In time, the expanding water will absorb this air. To replace the air follow these steps:

Step 1: Turn off water heater
Step 2: Turn off incoming water supply
Step 3: Open the closest hot water faucet in the coach
Step 4: Pull handle of pressure-temperature relief valve straight out and allow water to flow until it stops.
Step 5: Allow pressure-temperature relief valve to snap shut, turn on water supply and close faucet.

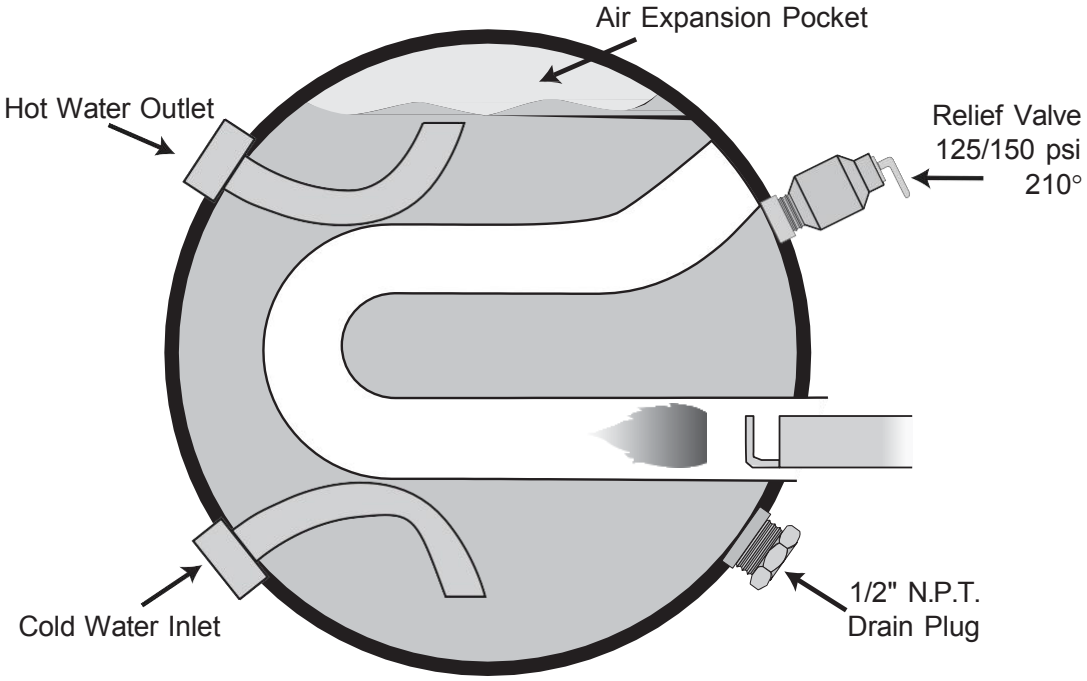

WATER HEATER TANK CORROSION

Pinhole leaks from galvanic corrosion may cause the water heater tank to fail.

Microscopic particles of metals (like iron and copper) suspended in water, set up a reaction inside the water heater that is not unlike the principle on which an automotive battery operates. The aluminum tank is the anode and the metals in the water serve as the cathode. Consequently, the aluminum gradually sacrifices itself and aluminum particles are carried away with the water flow.

A white scaly material (aluminum oxide) often is formed around the points where the heaviest action is taking place and heat accelerates the process. Severity of the problem varies considerably in different locales depending on the metal and mineral content of the water. White deposits inside the water heater tank are usually from water impurities that have settled out.

Periodic flushing of the water heater tank under pressure is recommended to slow down this process. For flushing instructions see your owner's manual or contact Dometic for a copy of our recommended procedure.

DOMETIC CLAD TANK

The Dometic water heater tank is constructed of a core of high strength aluminum. The interior of the tank consists of a 15% thickness of type 7072 aluminum (pure aluminum and zinc) that is fused to the core during the rolling process. This material protects the tank from the effects of heavy metals and salts found in waters throughout the country. It is anodic to these heavy metals and acts much like an anode in a steel glass lined tank except it will last much longer. There is also no need to replace an anode on a yearly basis.

Flushing the tank on a regular basis has been found to be helpful in insuring the best performance of your water heater and adding to the useful life of the tank. For flushing instructions see your owner's manual or contact Dometic for a copy of our recommended procedures.

FLUSHING TO REMOVE UNPLEASANT ODOR

A rotten egg odor (hydrogen sulfide) may be produced when the electro galvanic action of the cladding material releases hydrogen from the water. If sulfur is present in the water supply the two will combine and produce an unpleasant smell.

1. Turn off main water supply. Drain the water heater tank and reinstall drain plug. Remove the pressure-temperature relief valve. Mix solution of 4 parts white vinegar to two parts water. (For a 10 gallon tank, use 6 gallons vinegar to 3 gallons water). With a funnel, carefully pour solution into tank.
2. Cycle water heater with the above solution, letting it run under normal operation 4-5 times.
3. Remove the drain plug and thoroughly drain all water from the tank. Flush the water heater to remove any sediment. You may flush the tank with air pressure or fresh water. Pressure may be applied through either the inlet or outlet valve on the rear of the tank or through the pressure-temperature relief valve coupling located on the front of the unit.

TO FLUSH TANK WITH AIR PRESSURE:

Insert your air pressure through the pressure-temperature relief valve coupling. With the drain valve open, the air pressure will force the remaining water out of the unit.

TO FLUSH TANK WITH WATER PRESSURE:

Fresh water should be pumped into the tank with either the onboard pump or external water pressure. Continue this flushing process for approximately five minutes, allowing the fresh water to agitate the stagnant water on the bottom of the tank and forcing the deposits through the drain opening.

4. Replace drain plug and pressure-temperature relief valve.
5. Refill tank with fresh water that contains no sulfur.

The Dometic water heater is designed for use in a recreation vehicle. If you use your vehicle frequently or for long periods of time, flushing the water heater several times a year will prolong the life of the storage tank.

WINTERIZING (FLUSHING) INSTRUCTIONS

To insure the best performance of your water heater and add to the life of the tank, periodically drain and flush the water heater tank. Before long term storage or freezing weather drain and flush the tank.

1. Turn off main water supply (the pump or water supply hook up source).
2. Drain water heater tank by removing the drain plug. If the water flows sporadically or trickles instead of a steady stream of water, we recommend the following action; first open the pressure temperature relief valve to allow air into the tank and secondly, take a small gauge wire or coat hanger and poke through the drain opening to eliminate any obstructions.
3. After draining the tank, because of the placement of the drain plug, approximately two quarts of water will remain in the tank. This water contains most of the harmful corrosive particles. To remove these harmful corrosive particles flush the tank with either air or water. Whether using air or water pressure, it may be applied through the inlet or outlet on the rear of the tank or the pressure temperature relief valve. (If using the pressure temperature relief valve the support flange must be removed). The pressure will force out the remaining water and the corrosive particles.

   If you use water pressure, pump fresh water into the tank with the assistance of the on-board pump or use external water for 90 seconds to allow the fresh water to agitate the stagnant water on the bottom of the tank and force deposits through the drain opening. Continue repeating adding water and draining until the particles have been cleared from the water remaining in the tank.
4. Replace the drain plug and close the pressure temperature relief valve. The approximately two quarts of water remaining in the tank after draining will not cause damage to the tank should freezing occur.

Water Heater Terminology

Terminology	Definition
Access Door	hinged cover on outside of water heater
By Pass Kit	a combination of hoses and valves that can aid in the winterization of the water heater
CSA	Canadian Standards Association
Calibration	the condition determining whether the thermostat is registering temperatures properly
Cam-Loc Fastener	a door securing device
Circuit Board	an electronic panel that controls the spark, solenoid valve, and senses the main burner flame
Drawn Pan	metal pan attached to the water heater tank and fastened to coach sidewall to isolate combustion to outside of coach
DSI	direct spark ignition a.k.a. electronic ignition
E.C.O. (energy cut off)	high temperature re-set shut off device
Electrolysis	electro chemical corrosive process that can cause pinholes in tanks
Fenwal Tester	a diagnostic circuit board analyzer
Flame Spreader	a round deflective piece found at the combustion end of main burner.
Flue Box	a chamber that separates air intake and exhaust
Flue Tube	combustion and water heating surface area on inside of tank
Flying Lead	flame sensing wire that is sometimes found hard wired to circuit board
Front of Water Heater	access door side of water heater
Gas Solenoid Valve	a 12 volt DC device that turns on or off the flow of gas
Immersion Element	an AC electrical heating coil that is immersed directly into water
Inverted Flare	type of connection using double flare fitting and tube nut
Inner Tank	patented, designed vessel for heating water

Terminology	Definition
Main Burner	a gas and air mixing tube
Main Burner Air Shutter	the slotted sleeve on tube that allows for gas and air adjustment
Main Burner Orifice	a precision drilled fitting that regulates the BTU's of combustion
Mixing Valve	mixes hot and cold water to a fixed temperature 130°F.
N.P.T. (Nat'l Pipe Thread)	a plumbing measurement standard
Pilot Assembly	A gas tube, orifice & thermocouple
Pilot Orifice	a precision drilled thimble shaped component that meters gas flow to pilot.
Pilot Relight Ignition Module	12 volt electronic panel that provides spark ignition and flame sense to maintain pilot flame
Pressure-Temperature Relief Valve	a pressure and temperature safety device used on water heating vessels.
Ring and Gasket	retaining fiber & metal rings that secure combustion pan to tank
Sight Glass	burner flame viewing port on access door
Spark Probe Assembly	a spark electrode & flame sensing
Thermal Cut-Off	heat sensing diode that cuts power to circuit board if a flame backs out of the burner tube or flue tube normally caused by an obstruction in these areas
Thermostat (gas)	a temperature sensitive device for turning on and off the flow of gas (T-stat)
Thermostat (120 volt AC)	a surface mount temperature sensitive device that turns on/off heating element
Thermostat (12 Volt DC)	a surface mount temperature sensitive device that turns on/off the voltage to the circuit board
Thermocouple	a device, when heated, generates millivolts of electricity
UL	Underwriters Laboratories
"U" Tube	also referred to as a flue tube on some water heater models
Winterization	process of preparing a water heater for cold winter storage

Pilot Water Heater
6-10 Gallon

First number in matrix refers to illustration number, the second is the part number.

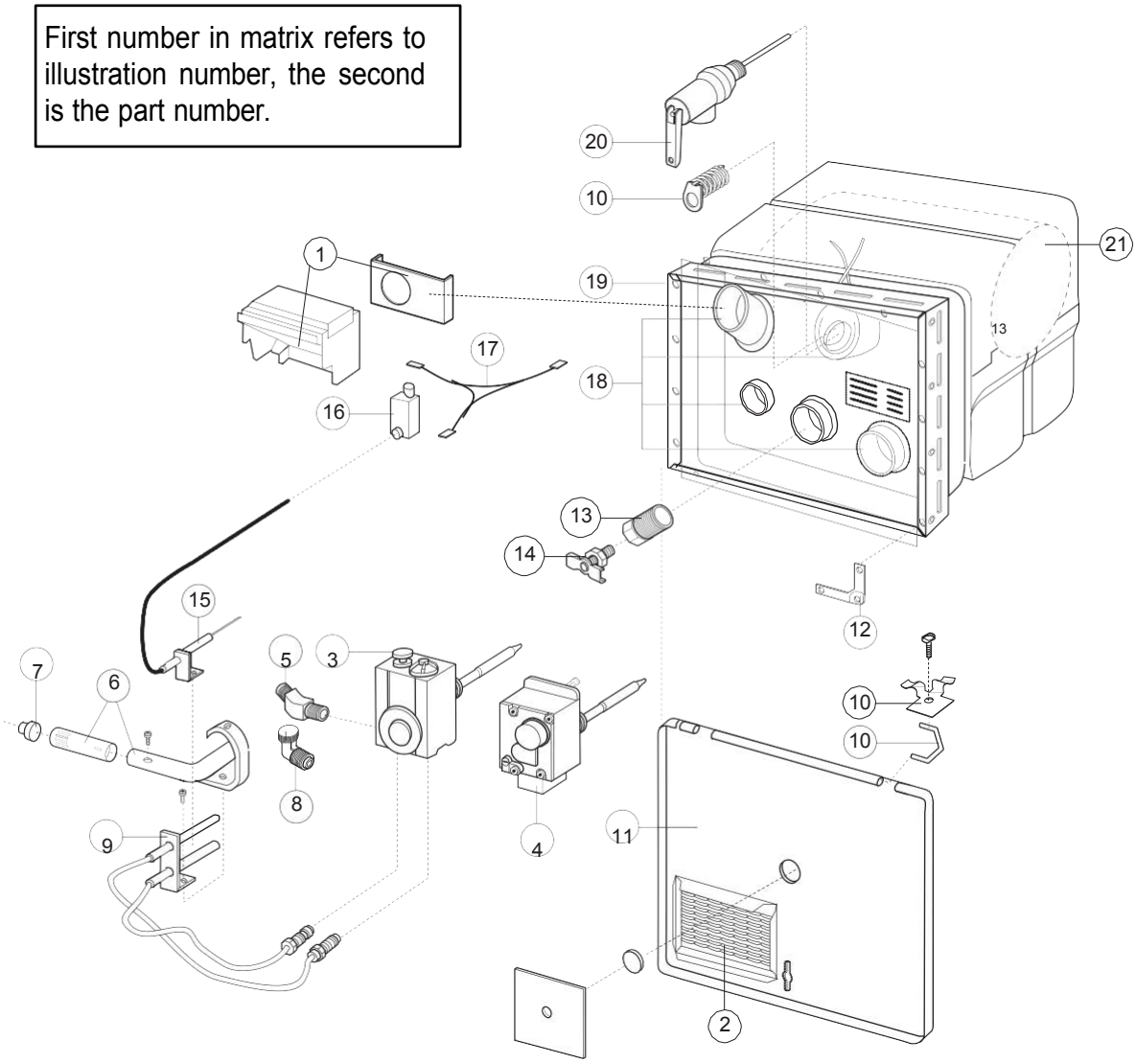

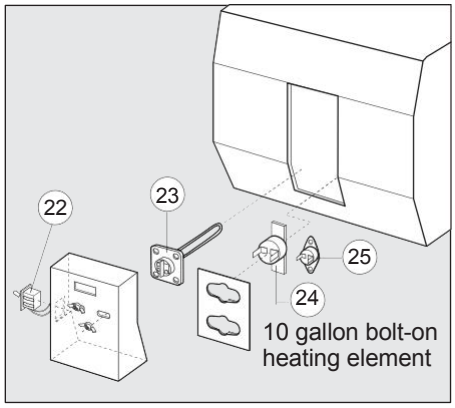

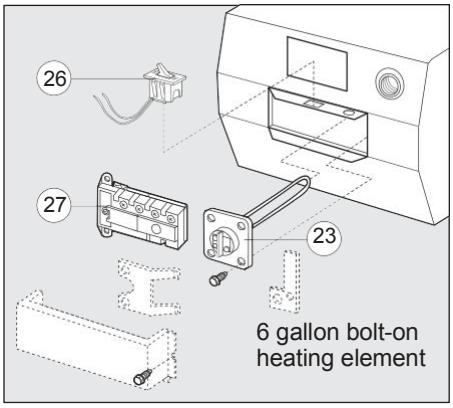

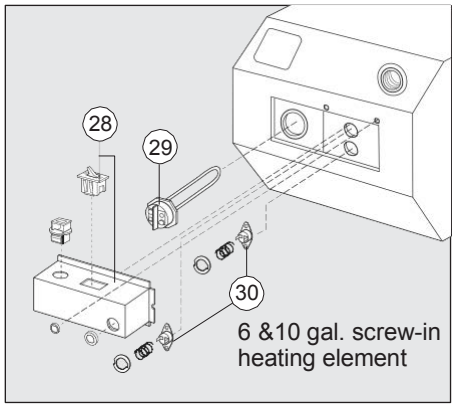

Pilot Water Heaters

Replacement Part Reference
January 2014

			GC6A, GC6A-3, GC6A-6, GC6A-7	G6A, G6A-2, G6A-3, G6A-6, G6A-6P, G6A-7, G6A-7P	GH6-3, GH6-6, GH6-7	GC6AA-7, GC6AA-7P	GC6AA-8, GC6AA-8P	G610-3, G610-3E, GH610-3	G10B, G10C	GC10A-2	GC10A-2P	GC10-1, GC10-2, GC10-2P	G10-2, G10-2P	G4SM
N/S	93212	Pilot relight kit-battery operated Retrofits on all pilot model water heaters												
N/S	92973	Inverted Flare Adapter	x	x					x					
N/S	92610	Gas Line Grommet	x	x	x	x	x	x	x	x	x	x	x	x
N/S	91285	Jade Orifice fits 91603 Pilot	x	x	x	x	x			x	x	x	x	
1	90930	Flue Box & Gasket	x	x	x	x	x	x	x	x	x	x	x	x
2	92640	Grille, New Style in Door	x	x	x	x	x	x		x	x	x	x	x
3	91602	Robertshaw Thermostat (WL) (3/8" NPT inlet, 3/8" NPT outlet)	x	x	x	x	x	x	x	x	x	x	x	x
4	91601	White Rodgers thermostat (1/4" NPT inlet, 3/8" NPT outlet)	x	x	x	x	x	x	x	x	x	x	x	x
5	91044	45° Elbow 3/8" x 3/8"-old (6Gal RS only)						x	x					x
	91347	Elbow – 1/4" x 3/8" inlet – new (WR only)	x	x	x	x	x							x
6	92615	Main Burner 6 Gallon	x	x	x	x	x		x					
	93221	Main Burner 10 Gallon								x	x	x	x	
7	92742	Main Burner Orifice (6 gal. #65 .035")	x	x	x	x	x							
	93914	Main Burner Orifice (10 gal. #62 .038")							x	x	x			
8	91441	90° Elbow 3/8" x 3/8"								x	x	x	x	
	92741	Main Burner Orifice Elbow-outlet	x	x	x	x	x							x
9	91603	Jade Pilot	x	x	x	x	x	x	x	x	x	x	x	x
10	91858	Door Hardware Kit	x	x	x	x	x	x		x	x	x	x	x
11	91514	Access Door (6 Gallon) Colonial White	x	x	x	x	x	x						x
	93993	Access Door (10 Gal.)								x	x	x	x	
12	91928	Set of 4 Corner Bracket	x	x	x	x	x	x	x	x	x	x	x	x
13	91857	Drain Plug ½"		Measure drain plug										
14	92698	Petcock Drain Valve 1/8" (OBS)		Measure drain plug										
15	93804	Piezo Electrode-hard-wired (OBS)		x		x	x				x	x	x	
16	93801	Ignition Module – hard-wired (OBS)		x			x						x	
17	93803	Piezo Wiring Harness – hard-wired (OBS)		x			x						x	
18	96010	Ring &Gasket Kit for service tank	x	x	x	x	x							x
19	91796	Drawn Pan 6 Gallon Pilot	x	x	x	x	x							x
	93935	Drawn Pan 10 Gallon Pilot								x	x	x	x	
20	91604	Pressure Temperature Relief Valve ½"	x	x	x	x	x	x	x	x	x	x	x	x
20	90028	Pressure Temperature Relief Valve ¾"		x			x							
21	92220	Styrofoam tank cover – bottom 6 gal	x	x	x	x	x							x
	92221	Styrofoam tank cover – top 6 gal	x	x	x	x	x							x
21	91238	Styrofoam tank cover – bottom 10 gal						x	x	x	x	x	x	
	91239	Styrofoam tank cover – top 10 gal						x	x	x	x	x	x	
22	91182	110VAC On/Off Switch & Jct Box (10 Gal.)									x			
23	91580	110VAC Element (Bolt-on)	x									x		

Pilot Water Heaters

Replacement Part Reference January 2014

			GC6A, GC6A-3, GC6A-6, GC6A-7	G6A, G6A-2, G6A-3, G6A-6, G6A-6P, G6A-7, G6A-7P	GH6-3, GH6-6, GH6-7	GC6AA-7, GC6AA-7P	GC6AA-8, GC6AA-8P	G610-3, G610-3E, GH610-3	G10B, G10C	GC10A-2	GC10A-2P	GC10-1, GC10-2, GC10-2P	G10-2, G10-2P	G4SM
24	92942	110VAC ECO Switch (NLA)									x	x	x	
25	92943	110VAC 140° Thermostat									x	x	x	
26	91092	110VAC On/Off Rocker Switch (6 Gal.)	x			x	x							
	91089	110VAC On/Off Rocker Switch (10 Gal.)									x	x	x	
27	91853	110VAC Thermostat (Rectangle) (NLA)	x										x	
28	91116	110VAC On/Off Switch & Jct Box (6 Gal.)					x							
29	92249	110VAC Element/Gasket (screw-in)	x			x	x			x	x	x		
30	91873	Thermostat/ECO 110VAC	x			x	x			x	x	x		
N/S	91591	Conversion to Pilot 6 gallon 110VAC		x										
N/S	91596	Conversion to Pilot 10 gallon 110VAC										x	x	

Electric Side
Combination Water Heaters

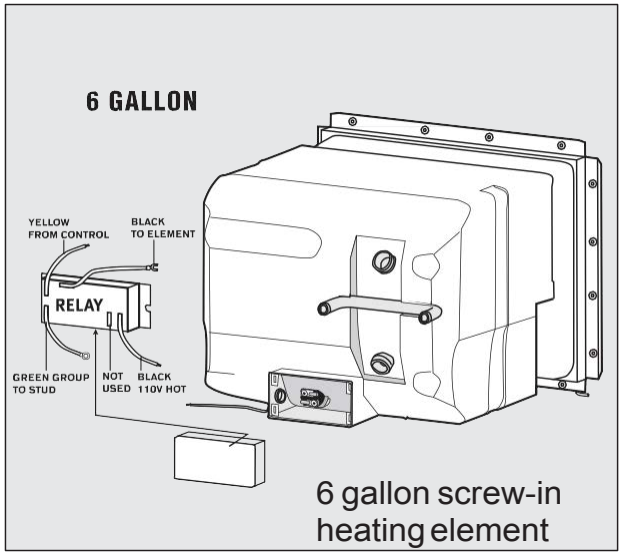

6 gallon screw-in heating element

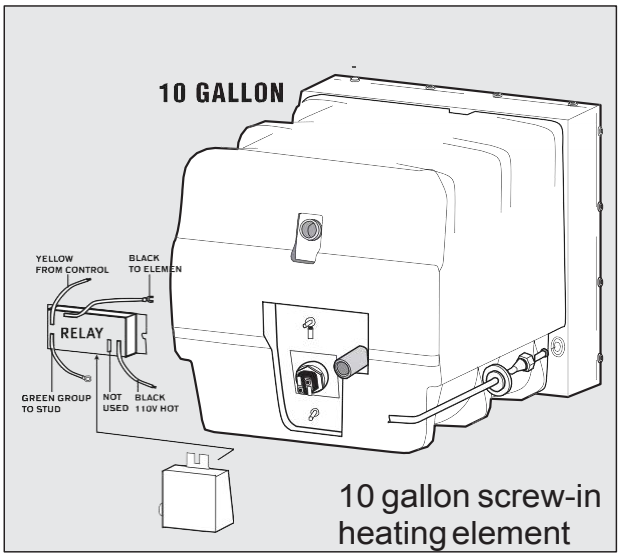

10 gallon screw-in heating element

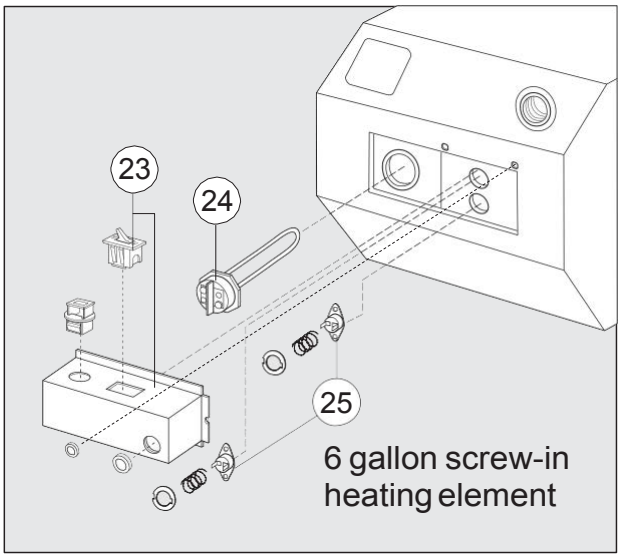

6 gallon screw-in heating element

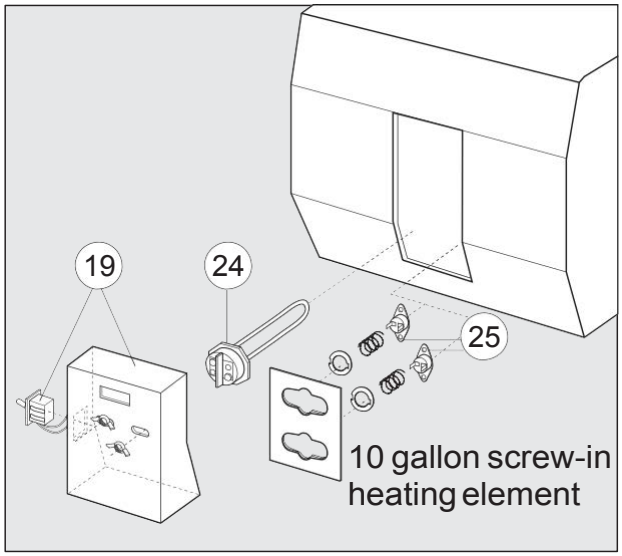

10 gallon screw-in heating element

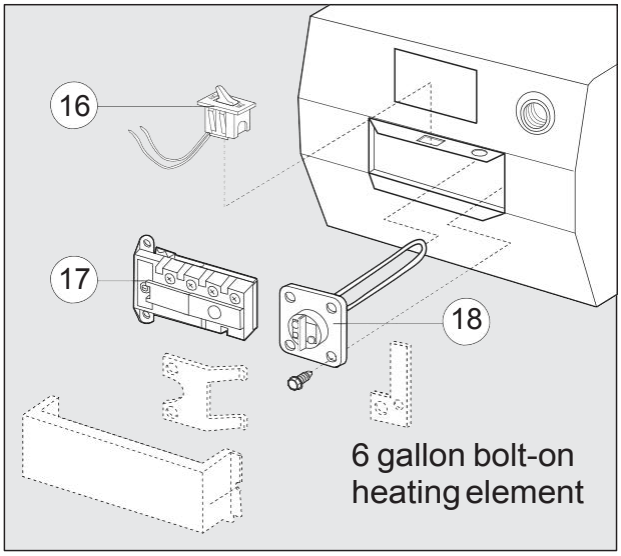

6 gallon bolt-on heating element

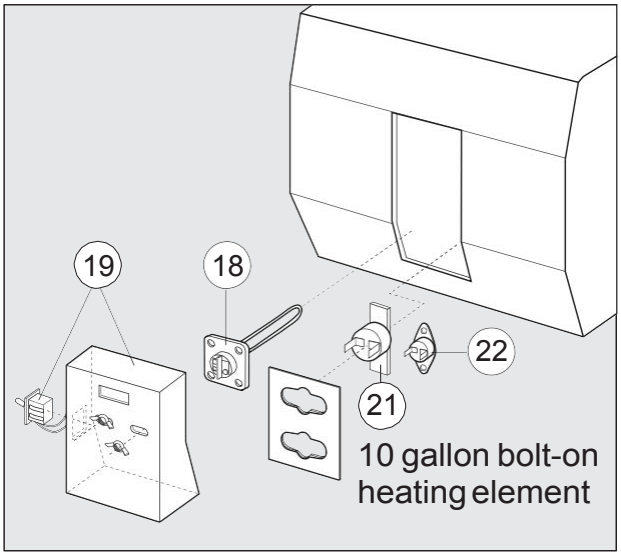

10 gallon bolt-on heating element

Electronic Water Heater
6-10 Gallon

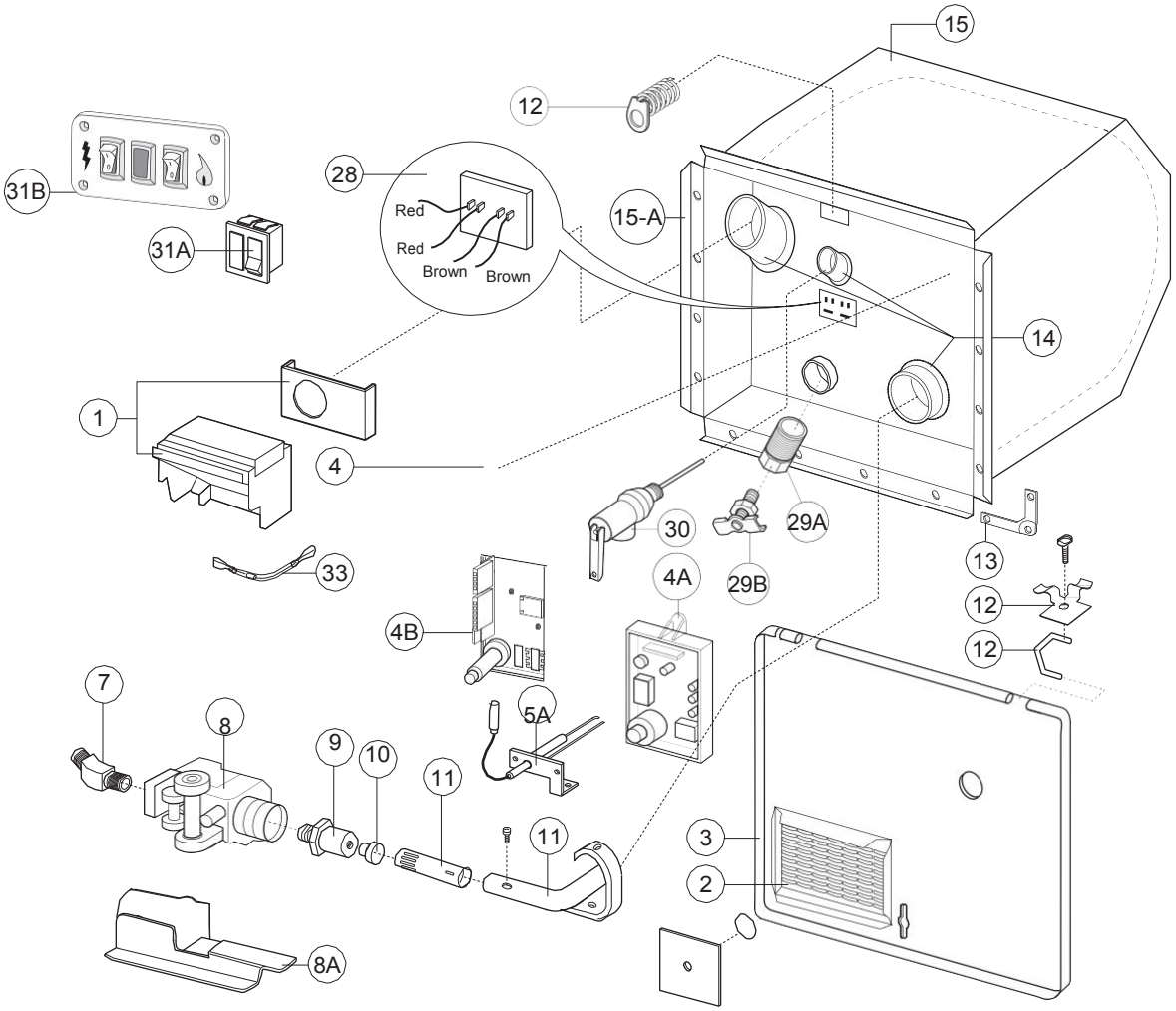

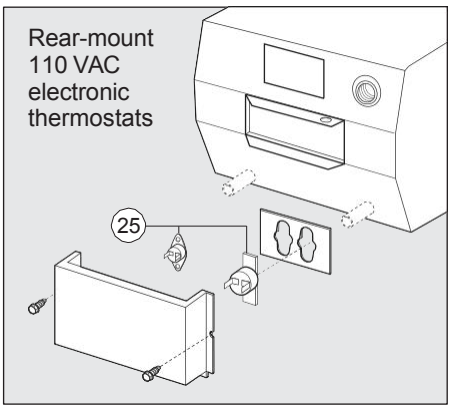

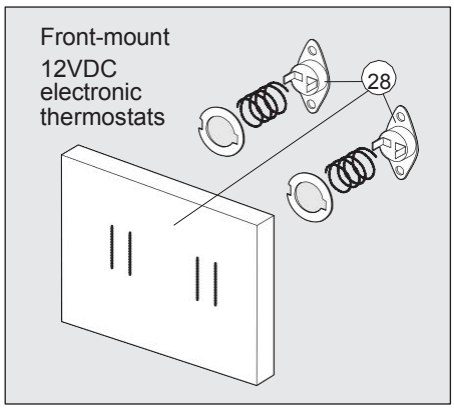

First number in matrix refers to illustration number, the second is the part number.

Electronic Water Heaters

Replacement Part Reference
January 2014

			GCH6-4E, GCH6-6E, GCH6-7E, GC6A-7E	GH6-6E, GH6-7E, GH6-8E	G6A-6E, G6A-7E, G6A-8E	GCH6A-7E, GCH6A-8E, GCH6A-9E	GC6AA-7E, GC6AA-8E, GC6AA-9E	GCH10A-2E, GCH10A-3E, GC10A-2E, GC10A-3E	G10-1E, GH10-1E	G610-3E, GH610-3E	G10-2E G10-3E	GC10-1E, GC10-2E	GH10-2E, GH10-3E	G6A-2E, GH6-3E	G6A-3E, GH6-3E, GH6-4E, G6A-4E	GCH6A-10E, GC6AA-10E	GC10A-4E, GCH10A-4E
	91470	120° Front Mount thermostat (not shown)	x	x	x	x	x	x	x	x	x	x	x	x	x	x	x
	93105	Adjustable Thermostat (retrofits front-mount thermostats) (not shown)	x	x	x	x	x	x	x	x	x	x	x	x			x
	92610	Gas Line Grommet (not shown)	x	x	x	x	x	x	x	x	x	x	x	x			x
1	90960	Flue Box and Gasket	x	x	x	x	x	x	x	x	x	x	x	x	x	x	x
2	92640	Grill, New Style in Door	x	x	x	x	x	x	x	x		x	x	x			x
2	90002	Extended Grille	x	x	x	x	x	x	x	x		x	x	x			x
3	91514	Access Door (6 Gal.) Colonial White	x	x	x	x	x							x	x	x	
3	93993	Access Door (10 Gal.)						x	x	x	x	x	x				x
NS	91420	Potted Circuit Board (post electrode connection)															
	91504	Ignition Circuit Board Includes 93865 & 93868															
4A	93865	Potted Circuit Board (Spade Electrode Connection)	x	x	x	x	x	x	x	x	x	x	x	x	x		
4B	93851	Potted Circuit Board – Combo														x	x
5	91606	Electrode (Remote Sense) WSL															
5A	93868	Electrode (Local Sense)	x	x	x	x	x	x	x	x	x	x	x	x	x	x	x
6	93312	Wire Harness	x	x	x	x	x	x	x	x	x	x	x	x	x		
6	93315	Wire Harness														x	x
7	91044	45° Elbow 3/8”	x	x	x	x	x	x	x	x	x	x	x	x	x	x	x
8	93870/93844	White Rodgers Valve (6&10 Gal.)	x	x	x	x	x	x	x	x	x	x	x	x	x	x	x
8A	93243	Gas Valve Bracket – (6 Gal.) OBSOLETE (Use with 93870)															
	93862	Gas Valve Bracket – (10 Gal.) (Use with 93844)															
8B	94787	Gas Valve Bracket – 1 piece				x	x	x			x		x	x		x	x
9	91563	Orifice Holder	x	x	x	x	x	x	x	x	x	x	x	x	x	x	x
10	92742	Orifice – Main Burner(6 gallon #65 .035”)	x	x	x	x	x									x	
10	93914	Orifice – Main Burner(10 gallon #62 .038”)						x	x	x	x	x					x
11	91638	Main Burner 6 Gallon	x	x	x	x	x									x	
11	96206	Main Burner 10 Gallon					x	x		x	x	x	x				x
12	91858	Door Hardware Kit	x	x	x	x	x	x	x	x	x	x	x	x	x	x	x
13	91928	Set of 4 Corner Brackets	x	x	x	x	x	x	x	x	x	x	x	x	x	x	x
14	96010	Ring & Gasket Kit for service tank	x	x	x	x	x	x	x		x	x	x	x	x	x	x
15	92220	Styrofoam tank cover – bottom	x	x	x	x	x								x	x	
	92221	Styrofoam tank cover – top	x	x	x	x	x								x	x	
	91238	Styrofoam tank cover - bottom						x	x	x	x	x	x	x			x
	91239	Styrofoam tank cover – top						x	x	x	x	x	x	x			x
15-A	91802	Drawn Pan (Electronic 6 Gallon)	x	x	x	x	x									x	
15-B	93871	Drawn Pan (Electronic 10 Gallon)					x	x	x	x	x	x					x

Electronic Water Heaters

Replacement Part Reference
January 2014

			GCH6-4E, GCH6-6E, GCH6-7E, GC6A-7E	GH6-6E, GH6-7E, GH6-8E	G6A-6E, G6A-7E, G6A-8E	GCH6A-7E, GCH6A-8E, GCH6A-9E	GC6AA-7E, GC6AA-8E, GC6AA-9E	GCH10A-2E, GCH10A-3E, GC10A-2E, GC10A-3E	G10-1E, GH10-1E	G610-3E, GH610-3E	G10-2E G10-3E	GC10-1E, GC10-2E	GH10-2E, GH10-3E	G6A-2E, GH6-3E	G6A-3E, GH6-3E, GH6-4E, G6A-4E	GCH6A-10E, GC6AA-10E	GC10A-4E, GCH10A-4E
16	91092	110VAC ON/OFF Switch (6Gal)	x			x	x										
16	91089	110VAC ON/OFF Switch (10Gal)						x				x					
17	91853	110VAC Thermostat (Rect) NLA	x					x			x						
18	91580	110VAC Element (Bolt-on)	x								x						
19	91182	110VAC On/Off Switch and Jct Box						x					x				
21	92942	110VAC ECO										x					
22	92943	110VAC 140° Thermostat										x					
23	91116	110VAC On/Off Switch & Jct Box				x	x										
24	92249	110VAC Element/Gskt (screw-in) Kit	x		x	x	x	x							x	x	x
25	91873	Thermostat/ECO 110VAC	x			x	x	x									
28	91447	Front Mount ECO/thermostat	x	x	x	x	x	x	x	x	x	x	x		x	x	x
29A	91857	Drain Plug Kit 1/2”	x	x	x	x	x	x	x	x		x	x	x	x	x	x
29B	92698	Petcock Drain Valve 1/8” WSL									x						
30	91604	Pressure Relief Valve – 1/2”	x	x	x	x	x	x	x	x	x	x	x	x	x	x	x
30	90028	Pressure Relief Valve – 3/4”		x	x						x		x			x	x
31A	91859	Switch 12VDC-White	x	x	x	x	x	x	x		x	x	x	x	x	x	
31A	91959	Switch 12VDC-Black	x	x	x	x	x	x	x		x	x	x	x	x	x	
31B	91230	Switch 12VDC-White Combo														x	x
31B	XXXX	Switch 12VDC-Black Combo															
33	93866	Thermal Cut-off	x	x	x	x	x	x	x	x	x	x	x	x	x	x	x
N/S	90145	Fuse, Mini 2Amp	x	x	x	x	x	x			x	x	x			x	x
N/S	93849	Relay														x	x
N/S	91222	Junction Box 110VAC – 6Gal														x	
N/S	91224	Junction Box 110VAC – 10Gal															x
N/S	91223	Junction Fox Cover for 6Gal															
N/S	94231	Recessed Flange – 10Gal															
N/S	94514	Recessed Flange – 6Gal															

DOMETIC

1120 North Main Street • Elkhart, IN 46514
PHONE: 574•264•2131 FAX: 574-206-9713
INTERNET: http://www.atwoodmobile.com

XT WATER HEATER
MPD 92690

REPLACEMENT VALVE KIT

10 GALLON

PATENT PENDING

ENGLISH, FRANCAIS (et Canada)

•Installation

Effective 2/14/14

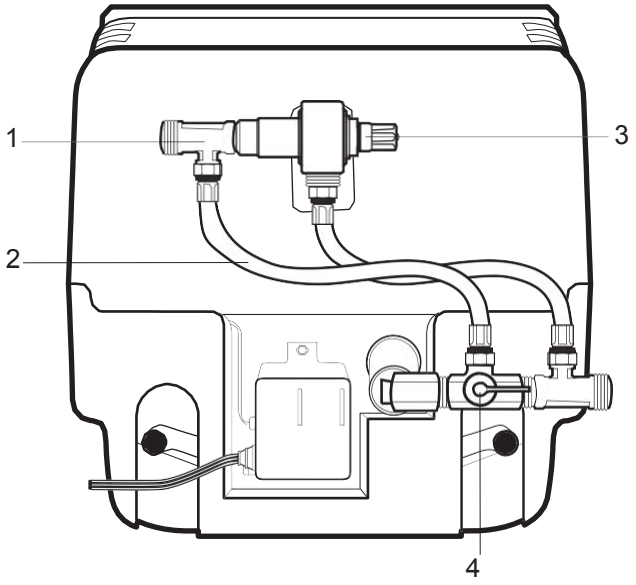

10 GALLON TE

2004-2005

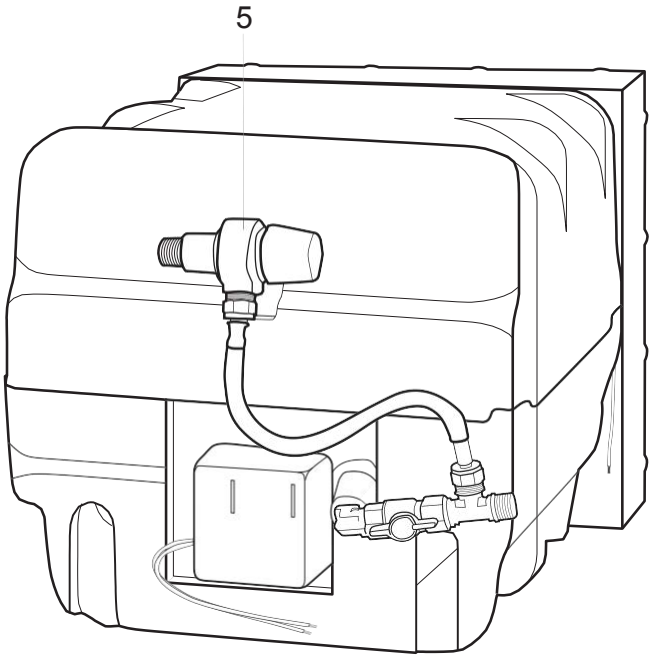

10 GALLON XT

NEW FOR 2005-2006

1. Remove water lines (1), flexible hoses (2), mixing valve (3) and inlet plumbing components (4).
2. Install new mixing valve (5) with Teflon tape. Use three wraps and pipe thread sealer to leading threads and install to minimum 35 ft/lbs.
3. Install male/male 90 degree fitting with a minimum of three wraps of Teflon tape, stopping at approximately 1 o'clock on last turn.
4. Assemble tee to ball valve using a minimum of three wraps of Teflon tape.
5. Install valve/tee assembly to elbow using a minimum of three wraps of Teflon tape.
6. Finish turn on completed elbow/valve/tee assembly to horizontal position.
7. Adjust tee and valve so valve handle operates and tee is pointing branch thread upward.
8. Install flexible hose following instructions on hose tag.
9. Reconnect water lines. Apply Valve Position Sticker on back near valve.
10. Pressurize system to maximum 50 psi and check all connections for leaks with leak detecting solution.

XT WATER HEATER PART IDENTIFICATION

SPARK IGNITION
HEAT EXCHANGE
COMBINATION GAS/ELECTRIC

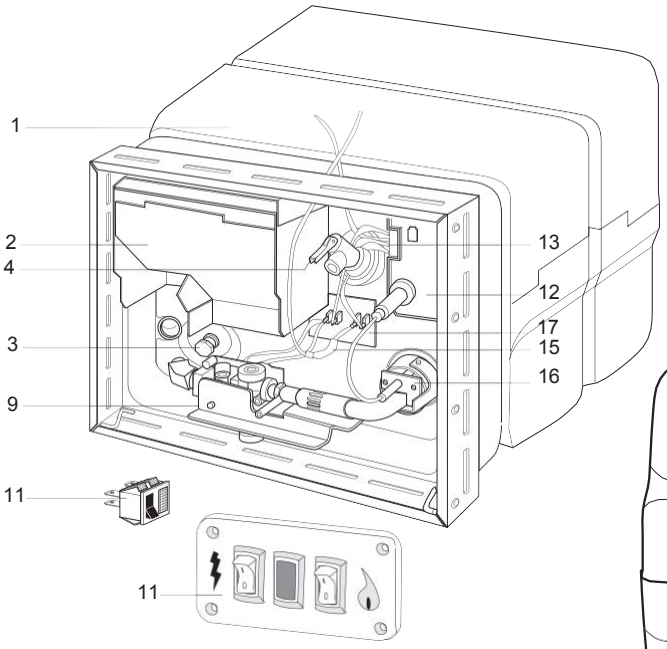

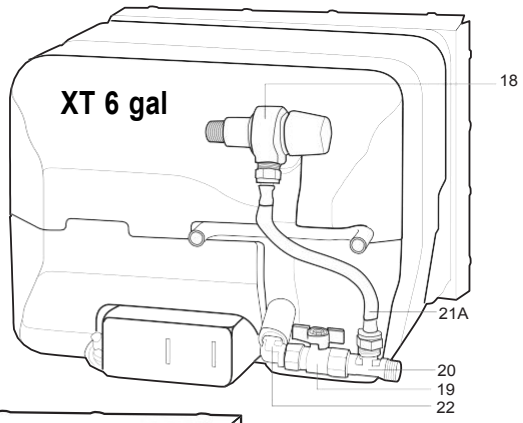

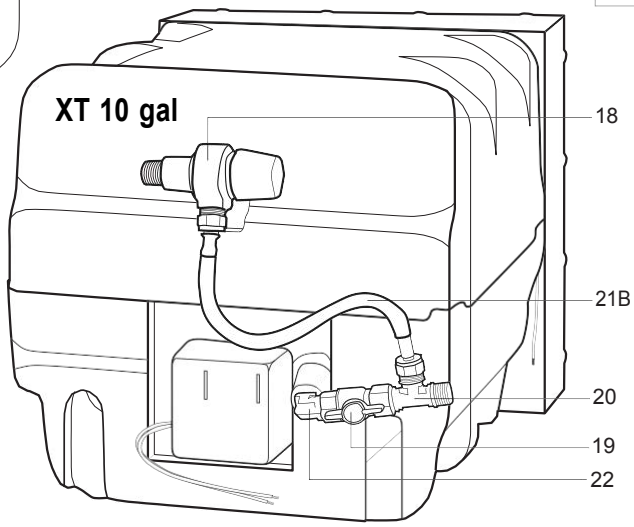

* All tanks includes styrofoam jacket
✗ Order by model
✓ order by color

ITEM REFERENCE	6 GALLON 22 LITRES	10 GALLON 38 LITRES	SPARK IGNITION	ALLUMAGE PAR ÉTINCELLE
1	✗	✗	*Tank	*Réservoir
2	90960	90960	Flue Box Assembly	Boîtier du conduit
3	91857	91857	Drain Plug	Bouchon de vidange
4A	91604	91604	Pressure-Temperature Relief Valve !/2” NPT	Soupape de décharge de type
4B	90028	90028	Pressure-Temperature Relief Valve 3/4” NPT	Soupape de décharge de type
9	93870	93870	Solenoid Valve	Électrovanne
11	91959	91959	Black on-Off Switch	Interrupteur Marche/Arrêt noir
	91859	91859	White On-Off Switch	Interrupteur Marche/Arrêt blanc
	91230	91230	Dual Switch	
12	93851	93851	Circuit Board	Circuit imprimé
13	93191	93191	Wiring Harness	Faisceau électrique
15	93866	93866	Thermal Cut Off	Coupure thermique
16	93868	93868	Spark Probe	Détecteur d'étincelle
17	91547	91547	ECO/T-STAT (kit)	Thermostat
			HEAT EXCHANGE	**ÉCHANGE DE CHALEUR**
1		✗	*Tank	*Réservoir
			COMBINATION GAS/ELECTRIC	**GAZ – ÉLECTRICITÉ COMBINÉS**
1	✗	✗	*Tank	*Réservoir
NS	92249	92249	Heating Element & Gasket	Élément de chauffe et joint
NS	93849	93849	Relay	Relais
18	90029	90029	Mixing Valve	
19	90030	90030	Ball Valve	
20	90031	90032	Tee	
21A	90032		9”Hose (6 Gallon)	
21A		90033	12” Hose (10 Gallon)	
22	90034	90034	Elbow	
		92690	10 Gal Replacement Valve Kit	

9 6 GALLON

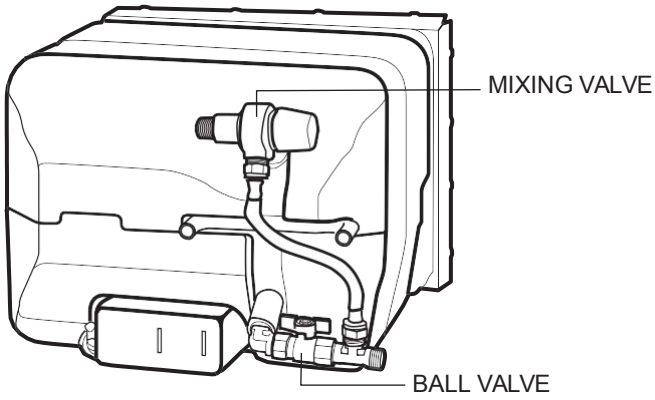

10 GALLON

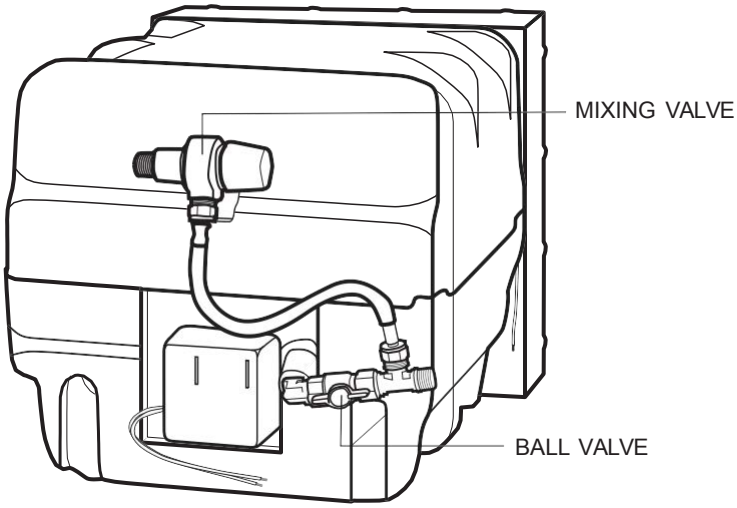

10 SINGLE SWITCH

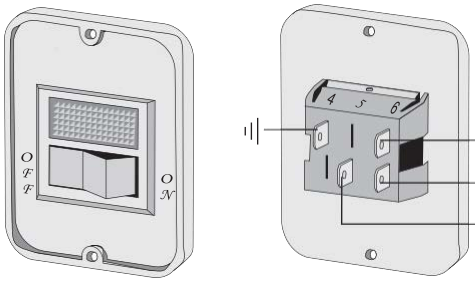

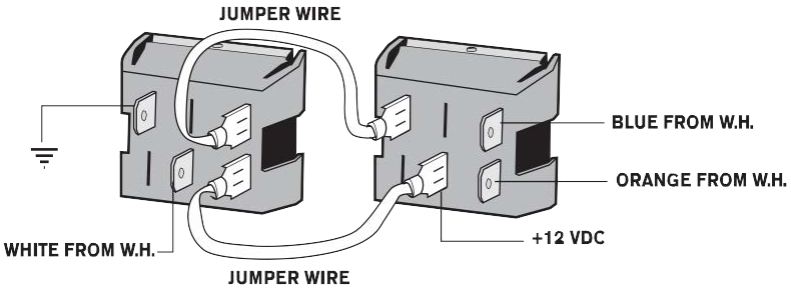

11 DUAL SWITCH

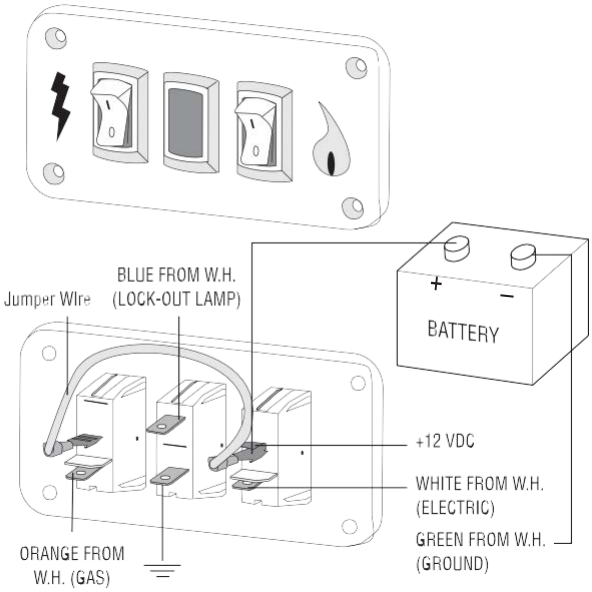

12 WIRING DIAGRAM COMBINATION GAS/ELECTRIC

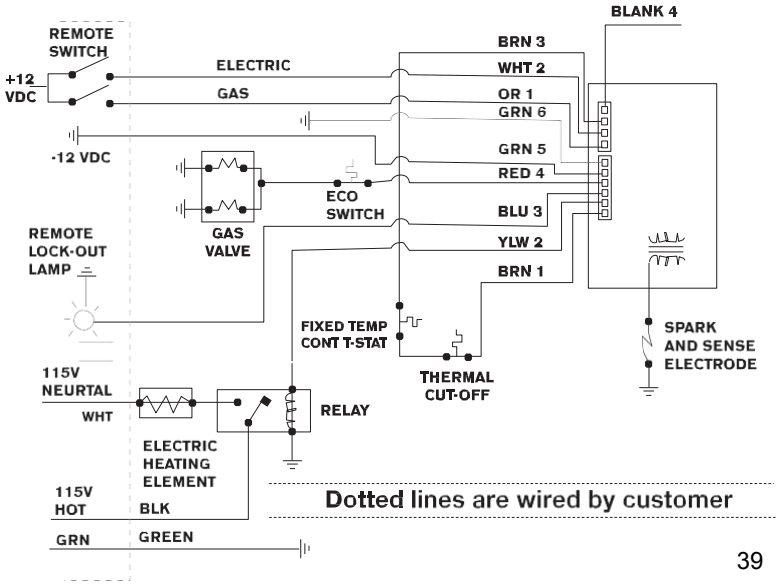

13

WINTERIZED

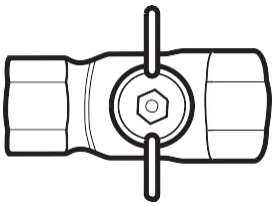

IN USE

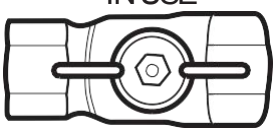

SERVICE TANK KIT PART NUMBERS

REPLACEMENT PART REFERENCE
February 2014

MODELS	91411	91412	91591	91592	91593	91596	91641	91642	93950	93952	93953	94205	91059	91053	91060	91028
GAS																
G6A-2, G6A-3, G6A-6, G6A-7		●														
G10-1, G10-2												●				
GAS PILOT-RELIGHT																
G6A-6P, G6A-7P		●														
GC6AA-7P, GC6AA-8P			●													
GAS/PILOT RELIGHT COMBINATION																
GC10-2P						●										
G10-1P, G10-2P												●				
GC10A-2P, GC10A-3P						●										
GAS & ELECTRONIC IGNITION																
GH10-1E, GH10-2E, GH10-3E										●						
G10-1E, G10-2E, G10-3E, G16-EXT									●							
G6A-4E, G6A-6E, G6A-7E, G6A-8E, G9-EXT							●									
GH6-4E, GH6-6E, GH6-7E, GH6-8E								●								
GAS/ELECTRIC & ELECTRONIC IGNITION																
GCH6-4E, GCH6-6E, GCH6-7E				●												
GC6A-7E					●											
GCH10A-4E, GEH16-EXT																●
GCH10A-1E, GCH10A-2E, GCH10A-3E											●					
GC10A-4E, GE16-EXT															●	
GC10A-1E. GC10A-2E, GC10A-3E											●					
GC10-1E, GC10-2E											●					
GCH10-2E											●					
GAS/ELECTRIC COMBINATION																
GC6A-3, GC6A-6, GC6A-7, GC6AA-7, GC6AA-8			●													
GCH6A-7E, GCH6A-8E, GCH6A-9E				●												
GCH6A-10E, GEH9-EXT														●		
GC6AA-7E, GC6AA-8E, GC6AA-9E					●											
GC6AA-10E, GE9-EXT													●			
GC10-1, GC10-2						●										
GC10A-2, GC10A-3						●										
HEAT EXCHANGE																
GH6-3, GH6-6, GH6-7	●															

NO REPLACEMENT TANK FOR G6A-3E

INNER TANK INCLUDES THE FOLLOWING:

- All tanks include the insulation jacket, rings and gaskets.
- On all combination gas/110VAC tanks, in addition to the items mentioned above, they will also come equipped with the 110VAC heating components attached (junction box, thermostat, ECO and heating element).
- Current combination gas/110VAC models have the thermostat and ECO located on the front side and are not installed on replacement tanks.

EHM 4-SM
EHM 6-SM
EHM 11-SM
EHM 20

ELECTRIC WATER HEATER

ALL MARINE WATER HEATER CAPACITIES

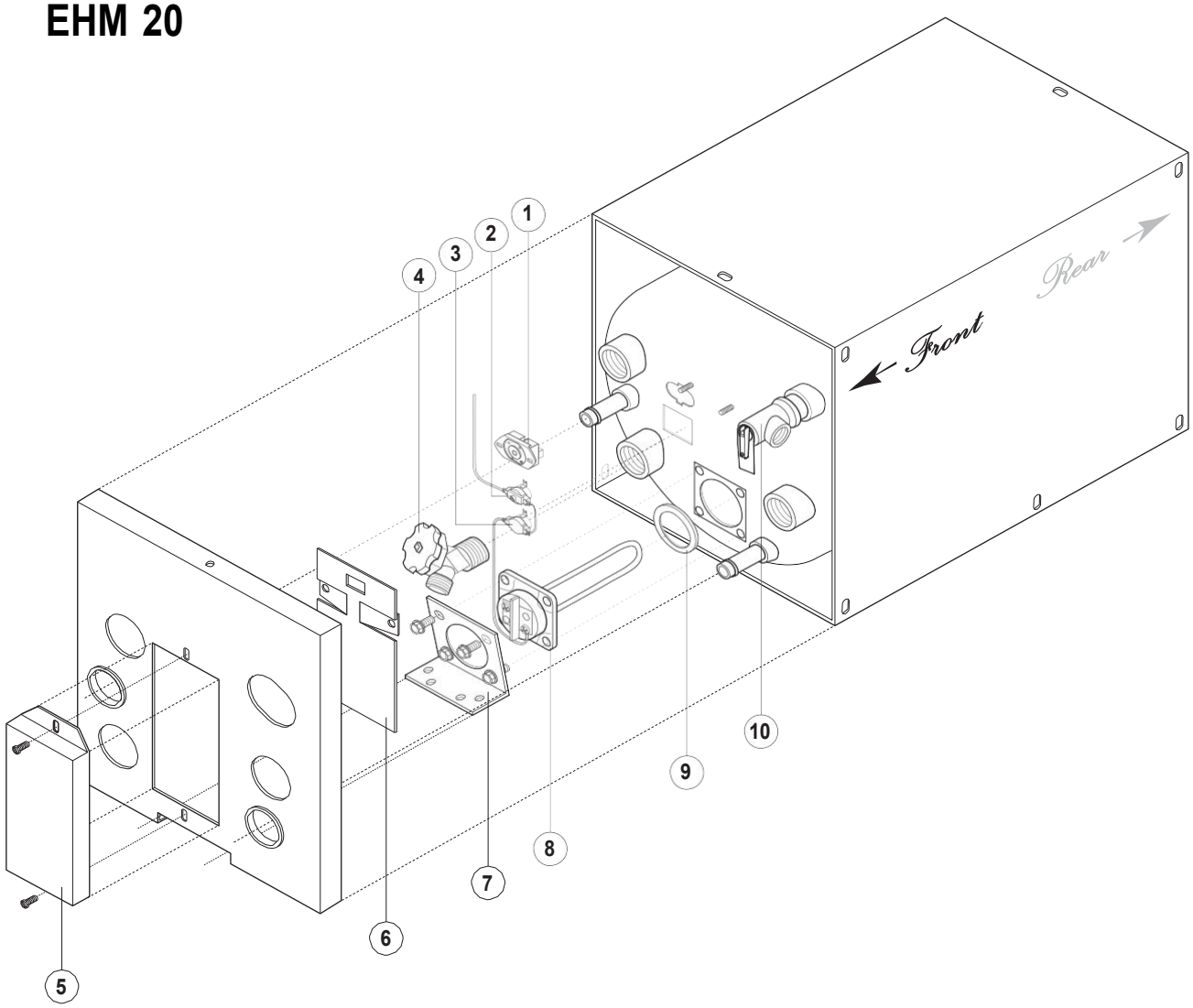

ITEM	PART #	DESCRIPTION
1/2/3	90037	Thermostat Kit, with ECO, plate, wires (110V)
	90041	Thermostat Kit, with ECO, plate, wires (220V)
4	93403	Drain Valve 3/4″
5	90045	Access Cover (NEW STYLE)
6	92236	Insulator
7	91498	Front & Rear Mounting Bracket (4 & 6 gal)
	91499	Front & Rear Mounting Bracket (11& 20 gal)
8	91580	Heating Element (110V) and gasket
	91581	Heating Element (220V) and gasket
9	92679	Gasket Heating Element (110V)
	91098	Gasket Heating Element (220V)
10	91604	Relief Valve (150 psi) 1/2” - NPT
	92655	Relief Valve (75 psi) 1/2” - NPT
	90028	Relief Valve (150 psi) 3/4” - NPT
	92647	Relief Valve (75 psi) 3/4” - NPT
N/S	91459	Thermostat for Solenoid Valve (EHP10)
N/S	91782	Solenoid Valve (EHP10) OBSOLETE
N/S	91781	Water Valves (EHP10) WSL

ON DEMAND WATER HEATER

QUESTIONS

The following questions should be answered during this portion of the manual:

- What is minimum gas pressure for proper water heater operation?
- Where on the water heater can gas pressure be tested?
- What is the minimum voltage needed for operation?
- What is the proper wiring hook-up for the water heater circuitry?
- What are the water flow requirements of this water heater?

Dometic On Demand Water Heater

Dometic water heaters are designed and approved for use only in recreation vehicles (travel trailers, 5th wheels, motor homes, etc.). They are offered in two styles one with an additional cold weather kit that uses ceramic resistance heater and heating pad to warm the modulation valve as well as the cold water inlet line inside the water heater.

TYPE OF GAS IGNITION -
This unit is ignited inside of the trailer by a remote ON/OFF switch. The water heater is designed to produce approximately 65F temperature rise between 1.00 GPM to 1.25 GPM. The consumer can add cold water to achieve the desired hot water temperature. Care must be taken to prevent higher temperatures which may result in scalding.

EXPLANATION OF MODEL NUMBER:

Electronic Models

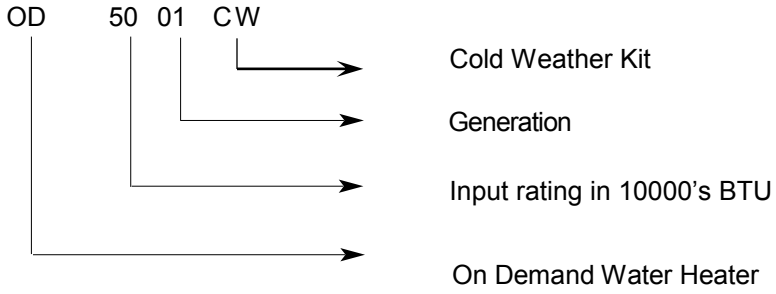

The SERIAL number is15 digits and can be broken down as follows:

902050306130194 = 90205 (unit's part number)-030613 (build date 03/06/13)-0194 (serial number)

FEATURES

- All units operate on propane gas.
- Easily installs in the rough opening for any current RV water heater on the market today
- Weight savings of up to 115 pounds of stored water
- Energy efficient only uses propane when hot water is needed
- High output flow controlled modulating valve with 50K burner
- Multiple protection features in the form of a pressure relief valve, a water temperature limit switch, pressure switch, and integrated flow sensor.
- Skin mounting allows water heater to be hooked up with plumbing & electrical before the sidewall is erected.
- 95% of all servicing is done on the outside of the water heater.
- The Dometic Limited Warranty is for a period of two years to the original owner.
- There are over 1,000 Service Centers throughout the United States which can be found on our website www.atwoodmobile.com under the heading "Dealer Locator"

Recommended Tools and Equipment

U-Tube Manometer - This is the most accurate device for measuring gas pressure. If you use a dial-type manometer, calibrated it periodically.

Multi-meter - This is the most versatile meter and will test continuity and 12VDC. These tests will allow one to verify voltage problems or faulty components. The entire electronic system can be tested with this meter.

U-TUBE MANOMETER
With 1/8” pipe nipple

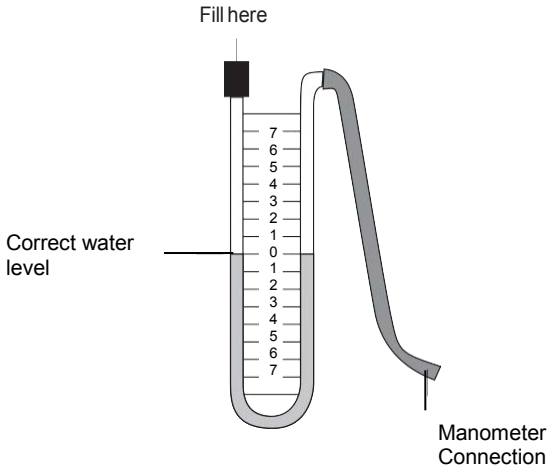

MULTI-METER TO TEST CONTINUITY & VOLTAGE

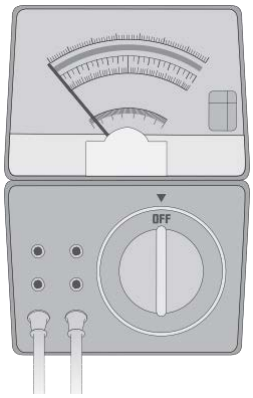

Circuit Board Tester - The tester is capable of testing any of the circuit boards (Fenwal and Channel models) that we have used on our water heaters. It is a simple table top device that will diagnose the following items on a circuit board: power circuit, sense circuit, spark generation and the lock-out mode. For use on circuit boards with a flying lead connection, splice a wire into the black wire of the tester harness with a 1/4″ male terminal on the free end.

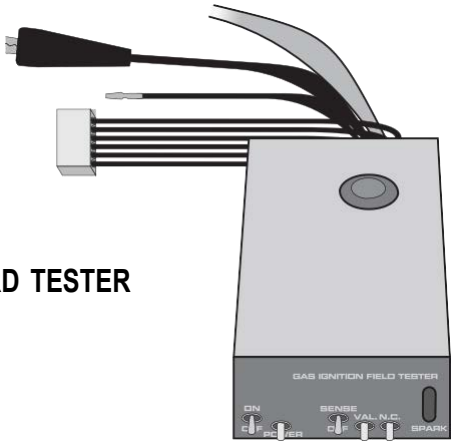

CIRCUIT BOARD TESTER

Common Hand Tools - 1/8″ and 1/4″ nut drivers, open end wrenches, flat blade and Phillips screw drivers.

Leak Test Solution - A solution that bubbles when applied to gas fittings or connections showing where a gas leak is present.

CUTOUT REQUIREMENTS:

OEM and Aftermarket-Unit can be installed in Dometic, Suburban, and Girard openings. Unit can also be installed through the wall from exterior, or prior to erecting wall into place at OEM manufacturing facility.

Dometic 6 Gallon Opening 12.7” H x 16.25” W x 17.62” D

Suburban 6 Gallon Opening 12.7” H x 12.7” W x 19.2” D

Dometic 10 Gallon Opening* 15.75” H x 16.2” W x 20.6” D

Suburban 10 Gallon Opening* 16.2” H x 16.2” W x 20.5” D

*Door/Adaptor Kit Required

**these units do not come with a remote wall switch this would be purchased separately.

General Specifications: (verify before installation)

- **Gas Pressure-** Robust gas pressure must be between 11”-13” wc with at least 50% of the gas appliances running/ Gas line diameter should be greater than 3/8” and not to exceed 20-30 feet in length.
- **Water Flow-** Water flow needs to be between .8 and 1.5 gallons per minute.
  - **NOTE:** Low water flow will not kick on the burner to the optimum burn and high flow can move water through the heat exchange too fast to allow for proper thermal transfer.
- **Incoming Water Temperature-** Average ground water temperatures are approximately 55°F in the majority of the United States. Water temperatures far beyond this normal parameter may need to consult with Dometic Technical Service to determine if this will meet customer expectations.
- **Elevation-** At 12,000 feet the 50K BTU would be approximately 60% efficient. Your 50K unit would be equivalent to a 35K BTU heater.

Wiring Diagram:

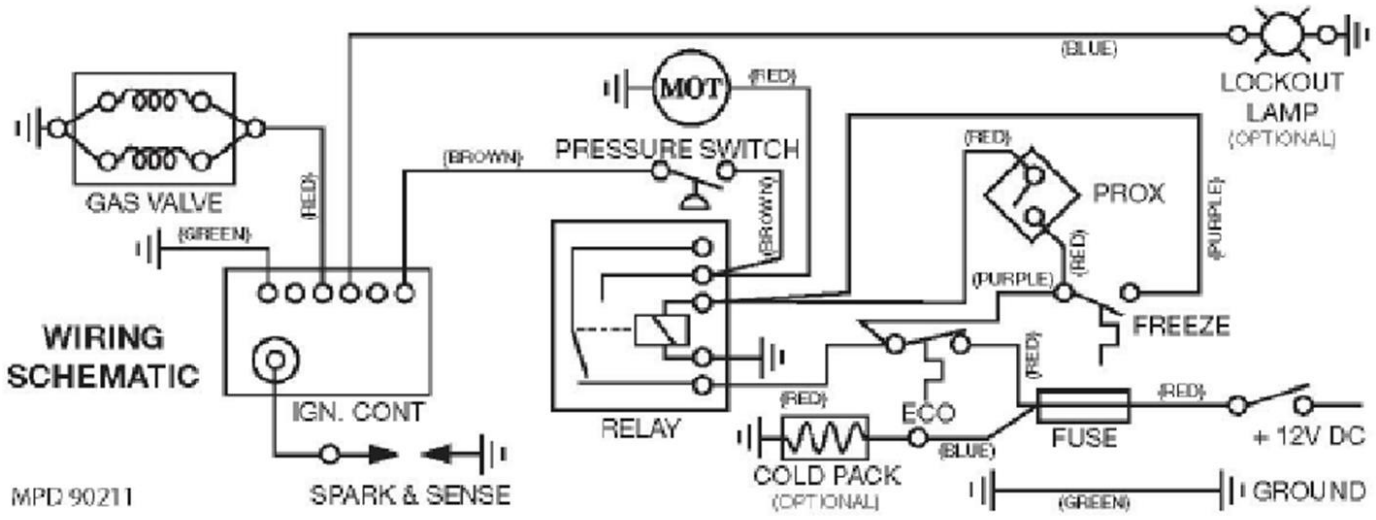

DOMETIC
1120 North Main Street • Elkhart, IN 46514
PHONE: 574•264•2131 FAX: 574-206-9713
INTERNET: http://www.atwoodmobile.com

ODWH TROUBLE SHOOTING GUIDE

Effective Date 2/10/14

Guides are only intended for use on Dometic products by service technicians who have successfully completed Dometic training. This guide should be used in conjunction with the appropriate Instruction Manual provided with the product and any applicable Industry standards. This is not intended to be a complete list. Please direct questions concerning service of Dometic to 866-869-3118 before proceeding.

CAUSE	SOLUTION
Water Heater does not come on when water is flowing min of .5gpm (No Blower Running)	
Loose electrical connection	Verify all connections are secure and polarity is correct (red wire to +)
Low flow	Verify flow through the heater
Low voltage	Correct power supply-10.5VDC minimum
Circuit open	Check circuit breaker if tripped correct problem and reset
Voltage is not reaching the ODWH	Replace fuse
Voltage is not reaching the board	No reed switch continuity adjust/replace
Voltage is not reaching the board	Wire harness connector not plugged into board
Dirty voltage	If using convertor check for A/C ripple, if present replace convertor
Water mixing valve is on	Shut off mixing valve
Defective circuit board	Replace circuit board
Open bypass valve	An open bypass valve causing water to bypass the heater should be closed
Water Heater does not come on when water is flowing min of .5gpm (Blower Running)	
No gas pressure	Verify there is gas in the LP tank & tank is on
Ignition electrode is not sparking	Verify the electrode is plugged in verify electrode wire is not damaged
Electrode is providing small arc	Adjust electrode to proper gap(1/8")
Power blower is not activating switch	Verify blower is receiving 12VDC
Pressure switch is not closing	Switch tube is clogged clear and replace
Pressure switch out of calibration	Replace pressure switch
No water flows from tap when turned on	
No water flowing	Ensure water supply or pumps are on
Water supply is obstructed	Check screens and aerators for obstructions and remove
Inlet outlet lines are reversed	If the lines are reversed correct their installation
Water Heater comes on but cycles on and off erratically	
Flow is too low to keep water heater operating	Check screens and aerators for obstructions and remove
Pump is not functioning properly	Repair or replace water pump
Water flow is cycling with the pump	A pressure accumulator tank is needed in the water heater.
Air is in the water lines	Bleed air from water lines by turning on all the water taps
Burner ignites but water temperature is too low	
Water flow is too high	If water flow is above 1.75gpm reduce flow to this rate or below
Inlet water is too cold (below 45F)	Water below this temperature may exceed the capacity of the water heater
Low gas pressure	Heater should be supplied 11"wc if not examine/change tank regulator
Heater door louvers/flue obstructed	Remove obstruction
Gas piping undersized for application	Gas line under 3/8" diameter
Piping longer than 30'	Locate ODWH closer to fuel source
Regulator orifice too small for application	Replace regulator
Modulating valve set incorrectly	Modulating valve set to summer in the winter, see IOM to adjust setting
Modulating valve not reaching high burn	Open hot water valve to highest flow then adjust down to optimal temperature
Burner ignites but water temperature is too low	
Propane tank regulator is set incorrectly	Regulator set above 13"wc adjust regulator to proper setting
Incorrect manifold pressure	Verify manifold pressure and adjust regulator
Incoming water is already warm	Adjust summer/winter valve per IOM instructions
Low water flow	Adjust water flow to a higher rate to lower water temperature.

ODWH Sequence of Operations

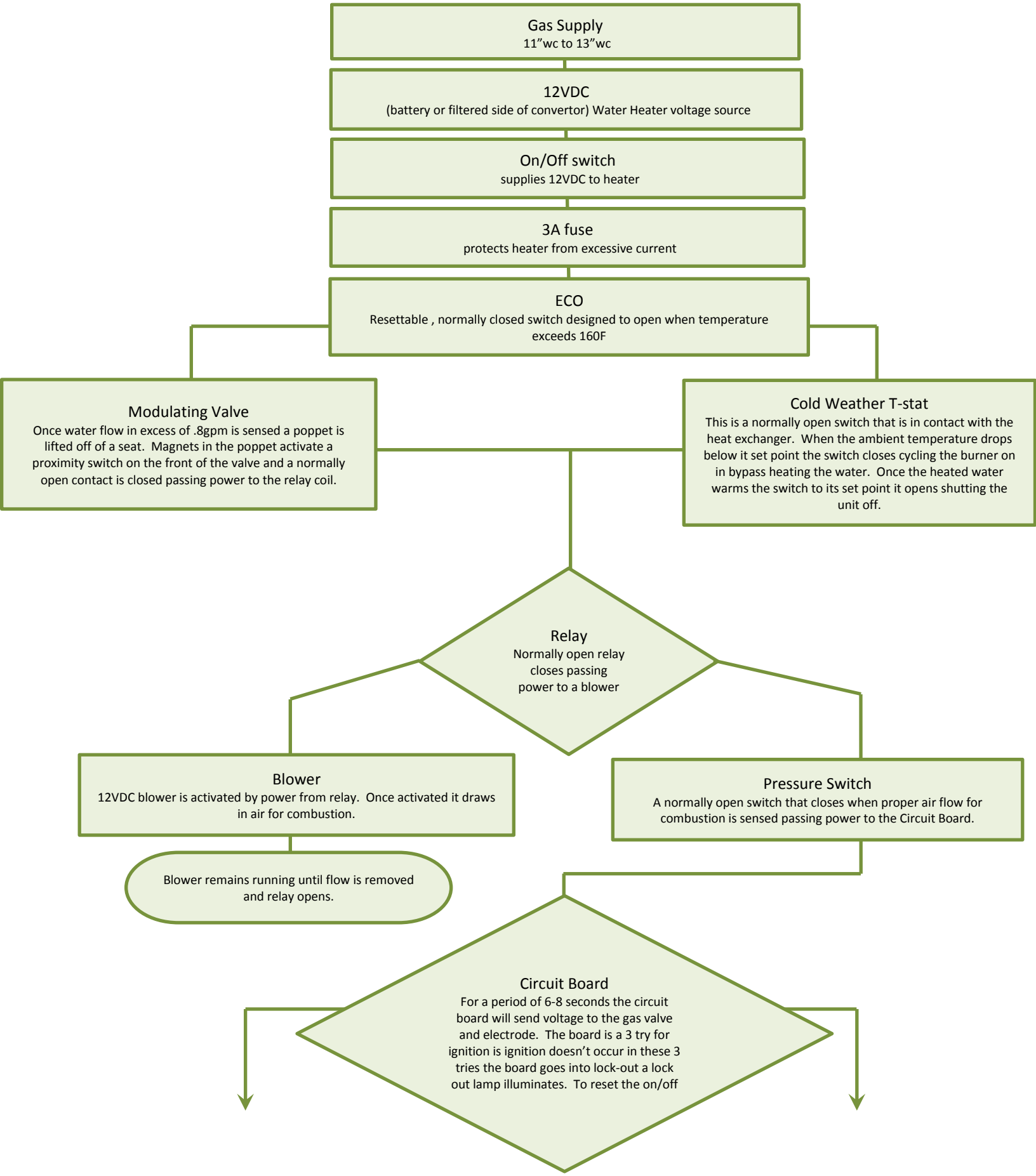

Electrode

Is an ignition source to ignite gas flow. If the electrode does not sense flame in 6-8 seconds it sends a signal to the board to remove power from the gas valve. If this occurs 3 times the board then goes into a lock-out state requiring the on/off switch to be cycled to reset the system.

Once the burner lights the electrode continues to act as a safety device sensing the presence of flame. If the flame is removed the electrode signals the boards to close the gas valve.

Gas Valve

The board sends voltage to the gas valve (min 10.5VDC) allowing it to open and gas to flow through gas poppet in the modulating valve.

Burner Assembly/Manifold

Once gas flows through the modulating valve gas poppet it is carried to the burner assembly where it is ignited as it comes out the burner ribbons. The power blower then draws the heat and exhaust gases upward through the flue.

Heat Exchange

The heat exchange is attached to the burner assembly. It has water running through copper tubing on its exterior. As the heat is drawn upward by the blower through the interior of the heat exchanger this heat is transferred to the water giving the hot water that we will then use.

Conclusion

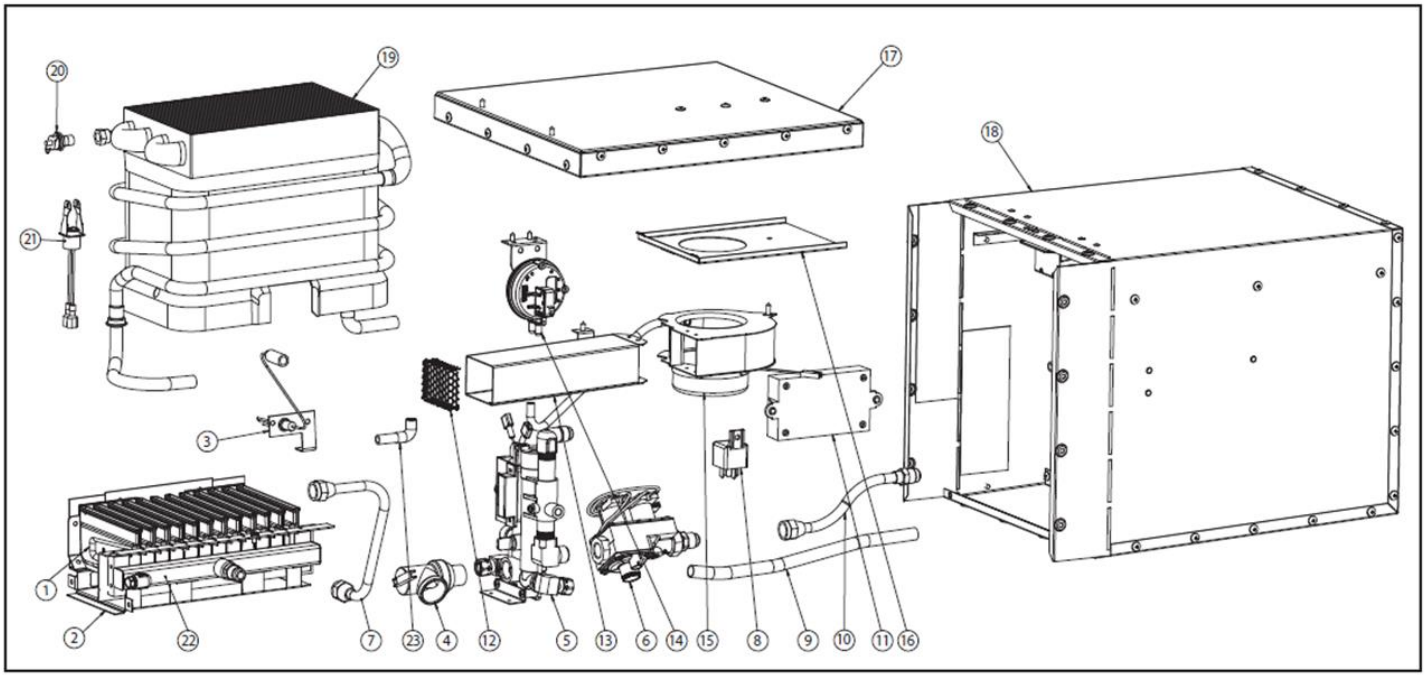

ITEM	DESCRIPTION	PART #
1	Burner Assy (50,000 BTU)	90264
2	Burner Mounting Bracket	90265
3	Igniter	90266
4	Pressure Relief Valve (PRV)	90267
5	Modulating Valve Assembly	90268
6	Gas Valve	90269
7	Gas Line – Burner	90270
8	Relay	90271
9	Water Inlet Tube	90272
10	Gas Inlet Tube	90273
11	Ignition Control	90274
12	Flue Outlet Screen	90275
13	Flue Tube	90276
14	Pressure Switch	90277
15	Blower Assembly	90278
16	Fan Base	90279
17	Flue Hood Assembly	90280
18	Case Assembly	90281
19	Heat Exchanger	90282
20	ECO	90283
21	Low Temperature Switch Kit	90346
22	Orifice #71 (50,000 BTU)	90286
23	Pressure Elbow Assy	90287
NS	Standard Door Kit	Inquire
NS	Large Door Kit (specify color)	Inquire
NS	winter kit	90290
NS	Shark Bite	90316
NS	Adaptor Plate	90218
NS	Door Latch	90200
NS	Elbow (pressure switch)	90230