Atwood®
Atwood Mobile Products
1120 North Main Street • Elkhart, IN 46514-3203
PHONE: 574•262•2655 **FAX:** 574•266•5410
INTERNET: http://www.atwoodmobile.com

LITERATURE NUMBER MPD 56282

LP GAS RANGE & SLIDE-IN COOKTOPS

RV, CV, RA, CA (32) Models

PROTECTED BY U.S. PATENTS D397,909 AND 5,931,151
OTHER PATENTS PENDING

ENGLISH

•Installation •Operation •Maintenance

Effective 6/14/05

SAFETY ALERT SYMBOLS

Safety Symbols alerting you to potential personal safety hazards. Obey all safety messages following these symbols.

⚠ WARNING	⚠ CAUTION
avoid possible injury or death	avoid possible injury and/or property damage

FOR YOUR SAFETY
READ ALL INSTRUCTIONS BEFORE OPERATING APPLIANCE

Installer: Provide these instructions to the consumer.
Consumer: Keep documents for future reference.

⚠ WARNING
FIRE OR EXPLOSION

FOR YOUR SAFETY
WHAT TO DO IF YOU SMELL GAS

- Open windows.
- DO NOT touch any electrical switch, or use any phone or radio in vehicle.
- Extinguish any open flame.
- Evacuate ALL persons from vehicle.
- Shut off gas supply at gas container or source.
- DO NOT start vehicle's engine or electric generator.
- Contact nearest gas supplier or qualified Service Technician for repairs.
- If you cannot reach a gas supplier or qualified Service Technician, contact the nearest fire department.
- DO NOT turn on gas supply until gas leak(s) has been repaired.

FOR YOUR SAFETY

➤ Do not store or use gasoline or other flammable vapors and liquids in the vicinity of this or any other appliance.

⚠ WARNING

- Improper installation, adjustment, service or maintenance can cause injury, property damage or death. Refer to this manual. For assistance or additional information, consult a qualified installer, service agency, manufacturer or the gas supplier.

⚠ WARNING
EXPLOSION OR FIRE

- Shut off all gas appliances and pilot lights when refueling gasoline tanks, LP tanks or when vehicle is in motion.
- Atwood & Wedgewood gas operated cooking appliances are for use with LP gas only, and for installation in recreation vehicles only (e.g. travel trailers, motor homes, tent campers, etc.).

⚠ WARNING
CARBON MONOXIDE POISONING

- Do not use cooking appliance for space heating. It is a potential danger to occupants of vehicle and damage to operating components of the range/cooktop.
- A window or air vent should be open slightly while using any cooking appliance. Gas flames consume oxygen which must be replaced to assure proper combustion.

NOTE TO CONSUMER:
Have the installer or dealer show you where the main gas shut off valve is located so that you will know how and where to turn off the gas supply when necessary.

Table of Contents

Safety Information 1
Installation 1-2
Operation 2-3
Maintenance 3-4
Storage 4
Covers 4
Illustration Figures 5
Warranty 5
Parts Identification 6-7
Accessories / Extended Warranty . . . . . .14 - 15
Cabinet & Counter/Recessed Bi-Fold - Cut Out Charts 16
Wiring Diagram 16

INSTALLATION

Installation must conform with local codes or in the absence of local codes, with the American National Standard for Recreational Vehicles, ANSI/A119.2 and Article 551, ANSI/NFPA 70. In Canada, installation must conform with CSA Z240.4.2-M.

⚠ WARNING
FIRE, EXPLOSION, BURN INJURY
CARBON MONOXIDE POISONING

- The cooking appliance must be completely separated and/or sealed from other air moving or air consuming devices such as, but not limited to, furnaces, microwave ovens, clothes dryers, cooling fans and doors or drawers in common cabinets. Failure to do so will affect the appliance(s) combustion air supply by creating either a negative or positive draft.
- NEGATIVE DRAFT caused by air moving appliances may draw the top burner flame down into or toward the cooktop resulting in cooktop damage, burn hazard, explosion possibility and/or carbon monoxide buildup.
- POSITIVE DRAFT may blow out the top burner flame during use resulting in an explosion and/or fire hazard and/or injury to the occupants of the vehicle.
- Do not operate the appliance in excessive windy conditions as this may cause a negative or positive draft.

1. For proper operation of your cooking appliance:
   THE HOUSING CABINET MUST BE:
   - properly constructed.
   - squared to the countertop and cabinet face

   OPENING IN THE HOUSING CABINET MUST BE:
   - level from side to side and front to rear
2. For ranges, the cabinet opening must be constructed so that no combustible material can be placed next to the range sides. If there is a gap between the range and an adjacent cabinet, the gap must be closed prior to installing the range.

⚠ WARNING
FIRE

- 30 inches is the *minimum vertical distance to combustible material* above the cooktop stove. This distance may be reduced by using non-combustible construction in accordance with Table 2-6.7.2 in ANSI A119.2.

3. Cabinet dimensions needed for each model are shown in **CABINET & COUNTER CUT OUT CHART**. The cabinet cut-out must be located with respect to the minimum clearances to combustible materials as noted. When planning the location, consider curtains or other combustible materials installed around the range or cooktop.

Note: For models having suffix "N" (i.e. RA1732 BGPN) Countertops with an overhang must be notched as shown in the illustrations. The notch should be 7/16″ minimum, both sides.

⚠ WARNING
FIRE AND/OR EXPLOSION

- **KNIFE RACK INSTALLATION** - Gas supply pipe must be installed with clearance from knives contacting or cutting gas lines.

4. When the cabinet has been prepared according to the dimensions given and the gas line is in place, remove the range or cooktop from its packaging and position the range or cooktop in the opening.
5. Verify the range or cooktop is level from side to side and front to rear.
6. Remove the cooking grate(s), slide the range top back about 1/8", then lift up on one of the front corners (FIG 3) to remove the range top.
7. Fasten the range or cooktop in place with wood screws (not supplied) through holes in burner box. Care should be taken to not force the range mounting flanges to bend, which may cause the range or cooktop to be mounted too low in the cabinet cutout.

⚠ WARNING
FIRE

- Gas line material inside the burner box must be rated for a minimum of 300°F operation.

8. Make the gas connection. All openings in the cabinetry around the gas line must be closed at time of installation. **RA, CA series with electronic ignition:** Complete the electrical connections as shown in the **WIRING DIAGRAM**. For galley slide-out applications, it is highly recommended that the negative 12 volt connection be connected directly to the battery. Voltage supply must be between 9 and 13 VDC. Appliance electrical rating is 12VDC, 0.6A during sparking.

⚠ CAUTION
PRODUCT DAMAGE HAZARD

- Connect to 12VDC service only.
- Do not connect to a circuit fused for more than 3 amps.
- Do not hi-pot range unless electronic ignition system has been disconnected.

9. Turn on the gas supply.

⚠ WARNING
EXPLOSION OR FIRE

- Do not use matches, candles or other sources of ignition to test fittings and gas lines for leaks.

10. Check all connections for gas leaks using a non-corrosive leak detection fluid. Do not use a soap and water solution. Leak test in excess of 8 oz. per square inch (1/2 psi) of air pressure will invalidate warranty.
11. Replace range top (FIG 4-5). Range/cooktop is now ready for operation.

TOP BURNER OPERATION

⚠ WARNING
BURN INJURY, FIRE AND/OR EXPLOSION

- Use range or cooktop only for use as described in this manual.
- Do not leave children alone or unattended in area where range or cooktop is in use. Never allow anyone to sit, stand, or climb on any part of the range cooktop. They could be burned or injured.
- Do not store things children might want above the range or cooktop. Children could be burned or injured while climbing on it.
- Do not wear loose or hanging garments when using the range or cooktop. They could ignite if they touch an open flame and you could be burned.
- Use only dry potholders. Moist or damp potholders on hot surfaces may result in burns from steam. Do not let the potholder touch an open flame. Do not use a towel or bulky cloth for a potholder. It could catch on fire.
- Do not heat unopened containers. They could explode. The hot contents may cause burns and container particles may cause injury.
- Do not use range or cooktop for warming or heating vehicle. You could be burned or injured, a fire could start, or deplete oxygen in the vehicle.
- Do not store flammable materials on, in, or near the range or cooktop. Any fumes can create an explosion and/or fire hazard.

⚠ WARNING
BURN INJURY, FIRE AND/OR EXPLOSION

- Do not operate range or cooktop if it is damaged or not working properly.
- Know where your vehicle's main LP gas shutoff is located.
- Verify sufficient gas supply before attempting to light any top burner. Air in the gas supply line will significantly delay burner ignition, and a burner may light unexpectedly as the air in the line clears out and is replaced by LP gas; this unexpected ignition may burn you. Air may be introduced into the supply line when the vehicle gas bottle is replaced, during servicing of other gas appliances, etc.
- If any burner should extinguish (after initially lighting or due to accidental blow-out), turn all burner knobs clockwise ↻ to OFF and WAIT FIVE (5) MINUTES before again attempting to light the burner.
- DO NOT touch top burners, burner grates, or other areas near top burners during and after use. Do not let clothing or other flammable materials to contact top burners or areas near top burners until they have had sufficient time to cool.
- Make sure the utensils you use are large enough to contain food and avoid boil overs and spillovers. Heavy splattering or spillovers left on the cooktop can ignite and burn you.
- DO NOT drop pans on the porcelain surface. Cracks or chips in the porcelain surface may result.
- Be sure that glass cooking utensils are safe for use on the cooktop. Only certain kinds of glass utensils are suitable for surface or top burner use without breaking due to the sudden changes in temperature.
- Never leave top burners unattended. A boil over could result and cause smoking and greasy spillovers that may ignite.
- Turn pan handles inward, but not over other top burners. This reduces the chance of burns due to bumping pan.
- Grease is flammable. Never allow grease to collect around top burners or on cooktop surface. Wipe spillovers immediately.
- DO NOT use water on grease fires. Never pick up a flaming pan. Smother a flaming pan with a tight-fitting lid or cookie sheet. Flaming grease outside of the pan can be extinguished with baking soda or a multipurpose dry chemical or foam-type fire extinguisher.
- Use care when lighting a top burner by hand. If the burner lights unexpectedly, or your hand is close to the burner, you may be burned.
- Burner flame should not extend beyond the edge of the cooking utensil. The flame could burn you and cause poor cooking results.
- Be sure all control knobs are turned to OFF when you are not cooking. Someone could be burned or a fire could start if a burner is accidentally left ON.

1. Check that gas is on at shutoff valve.
2. **LIGHTING Top Burners**:
   a. All burner controls operate counter-clockwise ↺ and must be pressed inward (toward the cooktop) to turn ON or LITE. Do not attempt to light more than one burner at a time.
   b. IMMEDIATELY light the burner by holding a lit match or a hand-held spark igniter designed for this purpose near the burner ports.
   c. To extinguish the top burner flame, turn the appropriate burner knob clockwise ↻ to OFF.

LIGHTING Top Burners with spark ignition: (FIG 4-5)

a. Turn the appropriate burner knob counter-clockwise ↺ to ON or LITE. Do not attempt to light more than one burner at a time.
b. Turn the SPARK knob clockwise ↻ one "click". If the burner fails to light, continue turning the SPARK knob clockwise ↻ until the burner lights.
c. To extinguish the top burner flame, turn the appropriate burner knob clockwise ↻ to OFF.

LIGHTING Top Burners with electronic ignition:

a. Turn the appropriate burner knob counterclockwise ↺ to ON or LITE. This will automatically activate the ignition system, and all burners will begin to spark repeatedly. This is the "clicking" sound you will hear.
b. The burner will light within five (5) seconds. Once the burner is lit, turn the knob counterclockwise ↺ to the desired setting.
c. To extinguish the top burner flame, turn the appropriate burner knob clockwise ↻ to OFF.
d. If 12 VDC power is not available to the ignition module for any reason, the top burners may be lit manually. See instructions in "Lighting Top Burners".

⚠ CAUTION
PRODUCT DAMAGE HAZARD

- Do not cook with the control knob set in the LITE position. Damage to the ignition module and burner electrodes may result.

3. Proportional flow (linear) top burner valves are installed. Start cooking at the HI setting, then turn the control knob counter-clockwise ↺ to continue cooking and obtain best results. Use the following table as a guide until you get used to the setting.

SETTING	RECOMMENDED USE
LITE	• To light the burner
HI	• To start foods cooking • To bring liquids to a boil
MED 9-6	• To hold liquids at a boil • To fry chicken or pancakes • To cook large amounts of vegetables
LOW 5- Low	• To keep food warm

⚠ CAUTION
PRODUCT DAMAGE HAZARD

- **Do not** use oversized cookware. The pan should not be more than one inch larger than the burner grate. The maximum pan size is a 10-inch skillet. Oversized cookware will cause excessive heat build-up in the stove top and will result in damage to the burner grate, burner and cooktop.
- **Do not** use a broiler pan, griddle, or any other large utensil which covers more than one (1) top burner at a time. This will create excessive heat which may cause melting, sooting or discoloration damage to the burner grates, range top, or utensils.
- **Do not** leave an empty utensil, or one which has boiled dry, on a hot top burner. The utensil could overheat and damage the utensil or the cooking appliance.

OVEN OPERATION

⚠ WARNING
FIRE, EXPLOSION, BURN INJURY, CARBON MONOXIDE POISONING

- Do not touch any inner surfaces of the oven or oven door, or the wire rack inside, or any utensils inside the oven during and after use until these areas have had sufficient time to cool. You could be burned or injured. During and after use, do not let clothing or other flammable materials contact these areas until they have had sufficient time to cool.
- Do not touch the outer surface of the oven door or the oven vent while the oven is in use. These areas become hot enough to cause burns. During and after use, do not let clothing or other flammable materials contact these areas until they have had sufficient time to cool.
- Do not cover the ventilation holes in the oven broiler shelf (shelf above oven burner). The air circulation inside the oven will be interrupted and cooking times will vary from normal; food may be burned or undercooked.
- Do not cover the oven vent openings while the oven is in operation; restricting the flow of combustion air may create a carbon monoxide poisoning hazard.
- Do not use oven as a storage area.
- If oven pilot should extinguish after initial lighting or due to accidental blowout, turn oven knob clockwise ↻ to OFF and wait five (5) minutes before again attempting to light oven.

1. Check that gas is on at shutoff valve.
2. **LIGHTING THE OVEN PILOT:**
   a. Push in oven control knob FIG 1-A and rotate counter-clockwise ↺ to PILOT ON.
   b Light oven pilot FIG 1-C located near the back of the oven, under the broiler shelf FIG 1-B and to the left of the oven burner FIG 1-D.
   c. Set the oven control knob to PILOT ON to maintain pilot flame. The oven and broiler are now ready for operation; see #3 below before proceeding. The oven pilot has been factory set and requires no further adjustment.
   d. To extinguish the oven pilot, push in the oven control knob FIG 1-A and rotate clockwise ↻ to OFF. Extinguish all pilots when refueling or traveling.
3. **LIGHTING THE OVEN BURNER:**
   a. Light the oven pilot as described in #2 above.
   b. With the oven control knob set to PILOT ON, push in and rotate the knob counter-clockwise ↺ to the desired temperature setting or to BROIL. The oven will pre-heat in approximately 10 minutes. For best results, always pre-heat the oven before use.
   c. The oven is equipped with a safety ignition system that requires a minimum of 30 seconds to operate after turning the oven control ON. This delay is normal.
   d. To extinguish the oven burner, rotate the knob clockwise ↻ to PILOT ON. The oven pilot will remain lit.
   e. For complete shutdown, push in and rotate the knob clockwise ↻ to OFF.
4. **USING THE BROILER:**
   a. Light the oven pilot as described in #2 (above).
   b. Push in and rotate the oven control knob counter-clockwise ↺ to BROIL.
   c. Center a broiler pan under the broiler flame.
   d. Move and turn the food over frequently to ensure even browning and cooking.

Note: A 2-piece enameled broiler pan (MPD 51042) may be purchased from Atwood.
Note: Cooking times will be longer at higher attitudes (+4000 feet).

MAINTENANCE

⚠ WARNING
BURN INJURY, FIRE AND/OR EXPLOSION

- Make sure all controls are OFF and the range or cooktop is cool before cleaning.
- Make sure that all cooktop surfaces, burner grates and burners are cool before cleaning or disassembling cooktop.
- Do not use oven cleaners, bleach, or rust removers on the cooktop or burner grates.
- Do not obstruct the flow of combustion and ventilation air.
- Keep appliance area clear of combustible materials, gasoline and other flammable vapors and liquids.
- Clean oven with oven cleaner only. Follow directions on the container.
- Never use a wire brush or metallic item for cleaning burner ports or orifices. Brush may “shed” bristles, that may lodge in the orifice or burner ports and cause a fire or explosion.

⚠ CAUTION
PRODUCT DAMAGE HAZARD

- Clean all surfaces as soon as possible after boil overs or spillovers.
- Use warm soapy water only to clean the burner grates, cooktops, painted surfaces, porcelain surfaces, stainless steel surfaces and plastic items on your range or cooktop. Do not use grit or acid-type cleaners.
- Do not use steel wool, or abrasive cleaners, or acid type cleaners such as chlorine bleach on your cooktop or grate systems. They will damage your range or cooktop. Use only non-abrasive plastic scrubbing pads.
- Do not allow foods containing acids (such as lemon or tomato juice, or vinegar) to remain on porcelain or painted surfaces. Acids may remove the glossy finish. Wipe up egg spills when cooktop is cool.
- Do not wash warm porcelain surfaces. Allow these areas to cool before cleaning. You could burn yourself, or the porcelain could crack.
- Pitting and discoloration will result if spills are allowed to remain for any length of time on stainless steel.
- Do not allow spillovers to remain on the burner caps. The caps could become permanently stained.
- When cleaning around the burners, use care to prevent damage to the electrode (if so equipped). If a sponge or cloth should catch the metal igniter electrode, it could damage or break the electrode. If this occurs, the burner will not light.

The owner's cooking habits and cleanliness will affect the operation of the range or cooktop. Proper installation and care will help keep your range or cooktop looking and operating like new. Most cleaning can be performed using normal household items.

RANGE & SLIDE-IN COOKTOP:

1. To remove the range top:
   All Models - Push firmly in the back of the top to slide the entire top backwards. While the top is slid backwards, lift up on one of the two front corners (FIG 3).
2. To replace the range top:
   a. RV & CV Models - Place the top on the range (FIG 4) so that the tabs on the spring clips fit into the slots on the top (FIG 4-B). Push backwards on the top until the bracket on the front of the top fits into the notch in the front control panel (FIG 5).
   b. RA & CA Models - Place the top on the range (FIG 4) so that the tabs on the spring clips into the slots on the top (FIG 4-B). Attach spark wires to burners (FIG 4-A), routing the wires away from the center of the burner. Rotate the top downward making sure that all three burner tubes fit up into the burner caps (FIG 4-C). This may be made easier by using a side to side motion when rotating the top down. Once the tubes are up into the burner caps push backwards on the top until the bracket on the front of the top fits into the notch in the front of the control panel (FIG 5).
3. To remove burner grates:
   a. RV and CV Models - simply lift grate up and remove. Replace by placing two legs at a time into the retaining grommets.
   b. RA & CA Models - lift grate up by rotating up away from center of stove (fig 2). Replace by placing legs into silicone retaining grommet and rotating back down on cooktop.

Clean all surfaces quickly after boil over or spillovers. Use a dry towel or cloth to soak up spills.

ALL SURFACES - When surface is cool, clean with warm soapy water, rinse and dry with soft cloth. Additional cleaning measures:

- Control Knobs - pull the knobs straight off the stems to clean.
- Control Panel - You may use a spray glass cleaner, applying cleaner to a paper towel (do not spray directly on panel.)
- Cook Top Surface - You may use a mild liquid cleaner/glass cleaner.
- Surface Burner Grates - They should be cleaned as soon as they become dirty. You may need to use a non-abrasive plastic scrubbing pad.
- Surface Burners, Burner Ports or Orifices - if clogged, gently brush perforated areas with a lightweight brush (toothbrush) or carefully clean holes out with a toothpick.

NOTE: Heavy burned on soil may require repeated cleaning steps until the soil is completely removed.

NOTE: The grate and surface of the cook top is covered with porcelain coating. Porcelain is a glass/ceramic coating glazed to the surface of the metal. Porcelain is designed to provide a surface that can withstand high temperatures and maintain an attractive appearance and make it easier to clean.

STORAGE

Dry all surfaces and burner box, then spray surfaces with an oil base substance to preserve the surface from rusting during long term storage. Wipe off oil coating before reuse.

RANGE MAINTENANCE & CARE INSTRUCTIONS

CARE OF PORCELAIN

The grates and surface of the cook tops are coated with porcelain. Porcelain is a glass/ceramic coating glazed to the surface of the metal. Porcelain is designed to provide a surface that withstands high temperatures, has an attractive appearance and is easy to care for and clean.

UNACCEPTABLE - WHICH WILL VOID YOUR WARRANTY

- NEVER use steel wool, abrasive cleaners, or acid type cleaners such as chlorine bleach or dish detergents with lemon fruit acid on any part of your cook top or grate system.
- Do not drop pans on the cook top surface, you may crack or chip the porcelain surface.

Should the porcelain become cracked, chipped or affected by excessive heat, the porcelain surface will become unsightly and its effectiveness will be reduced.

GENERAL COOKING INSTRUCTIONS

To quickly bring liquids to a boil or to begin a cooking procedure use a high flame setting. Reduce the flame to a lower setting to continue cooking. using a higher flame setting than is necessary to maintain a gentle boil will not cook food more quickly.

COOKWARE

Acquire cookware that fits the RV environment. Proper cookware will reduce cooking time, using less energy with better cooking results.

ACCEPTABLE

- A heavy gauge (aluminum or copper) metal pan with a smooth flat bottom (no more than 10" diameter), straight sides, and a tight fitting lid.
- Cover pan with a lid, food cooks faster when covered, because more heat is retained.
- Lowering flame size, increases cooking efficiency.
- Use cookware with appropriate utensils.

UNACCEPTABLE - WHICH WILL VOID YOUR WARRANTY

Oversized cookware causes a build up of excessive heat, which results in damage to the burner grate, burners, and cook top. Including the following cookware - but not limited to:

- Griddles
- Any cookware that extends beyond 1" of the grate edge.
- Any cookware that comes into contact with the cook top.
- Woks with support rings which restrict air circulation around the burners.

Excessive heat will cause grates and tops to lose their protective coating, becoming unsightly in appearance. Airflow is important for cooking, the warmed air must be allowed to mix with air around the burner.

COOKWARE

Use cookware that fits the RV environment, Proper cookware will reduce cooking time, use less energy, and produce better cooking results.

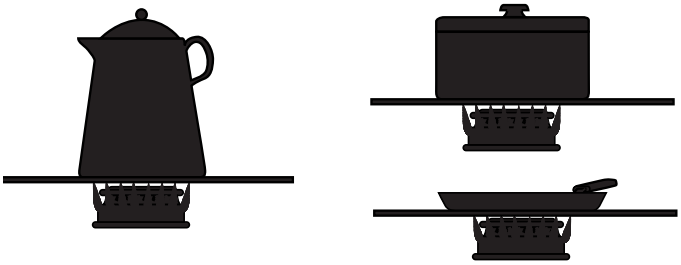

OVEN HEAT CONTROL AND GENERAL USE

PREHEATING OVEN

For best results, preheat the oven for 10 minutes before use. For baking, do not select a higher than required temperature to preheat the oven faster, it may have a negative effect on baking results.

AIR CIRCULATION

Warmed air must circulate freely throughout the oven for food to cook properly. To prevent undercooked or burned food:

- **Do not cover or block ventilation holes in the oven broiler shelf (shelf above the burner).**
- Do not cover the bottom of the oven with aluminum foil to catch "over flow".
- Do not cover oven racks with aluminum foil.
- Place the food to be baked in the center of the oven with 1"-2" inches space from the oven wall on all sides allowing at least 1"-2" of space on all sides of the container.
- Do not crowd the oven with assorted pans or block air passage with an oversized pan.

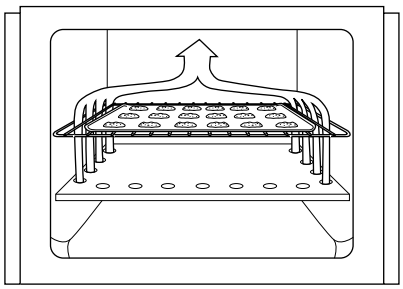

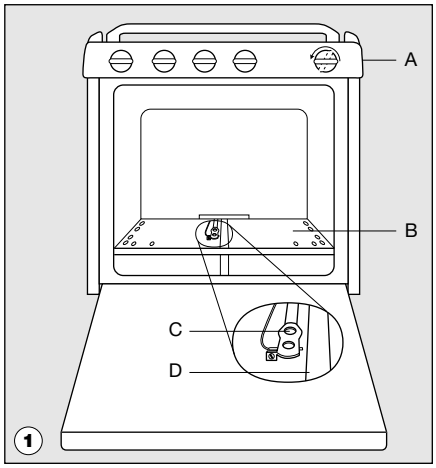

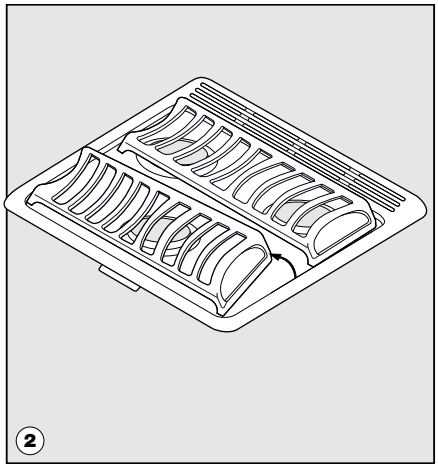

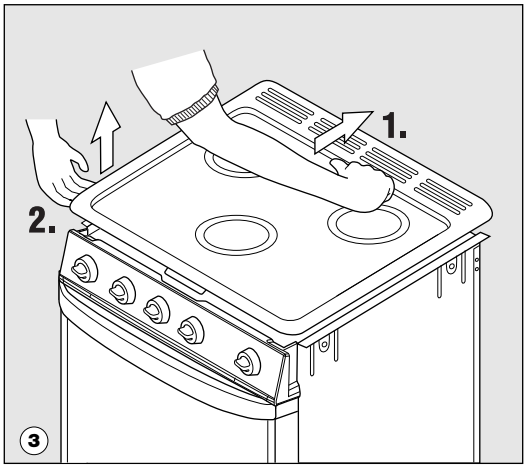

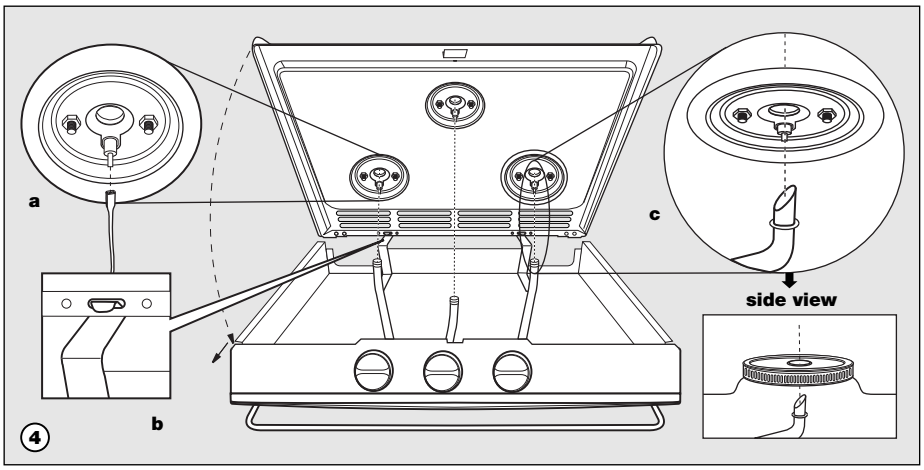

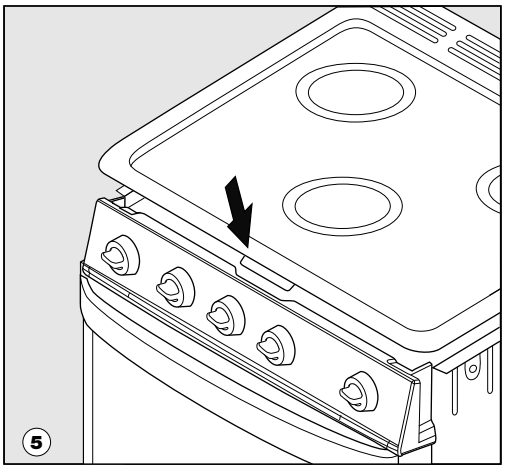

COOKING APPLIANCE LIMITED WARRANTY

Atwood Mobile Products warrants to the original owner and subject to the below mentioned conditions, that this product will be free of defects in material or workmanship for a period of two years from the original date of purchase. Atwood's liability hereunder is limited to the replacement of the product, repair of the product, or replacement of the product with a reconditioned product at the discretion of Atwood Mobile Products. This warranty is void if the product has been damaged by accident, unreasonable use, neglect, tampering or other causes not arising from defects in material workmanship. This warranty extends to the original owner of the product only and is subject to the following conditions:

1. For two years from the date of the original purchase Atwood warrants that this product will be free of defects in material and workmanship with the exceptions noted below. This warranty includes reasonable labor charges required to remove and replace the part. Service calls to the customer's location are not considered part of these charges and are therefore the responsibility of the owner.
2. This warranty does not cover the following items classified as normal maintenance and/or customer damage.
   a. Damage, discoloration or scratches to porcelain enamel or other finishes from improper use and care.
   b. adjustment of gas pressure
   c. cleaning or adjustment of any burners
   d. cleaning or replacement of burner orifices
   e. cleaning or adjustment of pilot and thermocouple
   f. damage to glass
   g. products purchased for commercial or industrial use.
3. In the event of warranty claim the owner must contact in advance either an authorized Atwood Service Station or the Atwood Service Department. Warranty claim service must be performed at an authorized Atwood Service Station (a list will be provided at no charge) or as approved by the Atwood Service Department Atwood Mobile Products, 1120 North Main, Elkhart, IN 46514 USA. Phone 574-262-2655.
4. Return parts must be shipped to Atwood Mobile Products "prepaid". Credit for shipping costs will be included with the warranty claim. The defective parts become the property of Atwood Mobile Products and must be returned to the Consumer Service Department, Atwood Mobile Products, Greenbrier Operations, 6320 Kelly Willis Road, Greenbrier, TN 37073 USA.
5. This warranty applies only if the unit is installed according to the installation instructions provided and complies with local and state codes.
6. The warranty on replacement parts is the unused portion of the original warranty period.
7. Damage or failure resulting from misuse (including failure to seek proper repair service) misapplication, alterations, water damage or freezing are owner's responsibility.
8. Atwood does not assume responsibility for any loss of use of vehicle, loss of time, inconvenience, expense for gasoline, telephone, travel, lodging, loss or damage to personal property or revenues. Some States do not allow the exclusion or limitation of incidental or consequential damages, so the above limitations or exclusions may not apply to you.
9. Any implied warranties are limited to two (2) years. Some States do not allow limitations on how long an implied warranty lasts, so the above limitation may not apply to you. This warranty gives you specific legal rights and you may also have other rights, which may vary, from State to State.
10. Replacement parts purchased outside the original cooking warranty carry a 90 day warranty. This includes the part at no charge and reasonable labor charges to replace it.

This Atwood product is designed for use in recreation vehicles for the purpose as stated in the 'data plate'. Any other use, unless authorized in writing by the Atwood Engineering Department, voids the warranty.
Atwood/Wedgewood Vision Products include range/oven, drop-in, slide-in and high pressure stoves.

CABINET & COUNTER CUT OUT CHART

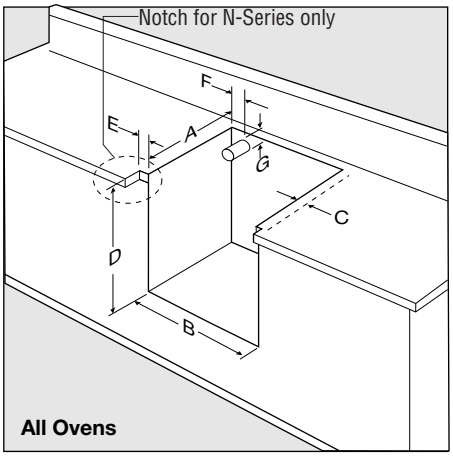

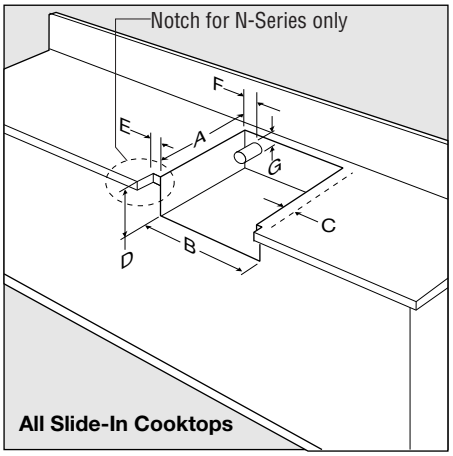

RECESSED BI-FOLD COVER CUT OUT CHART

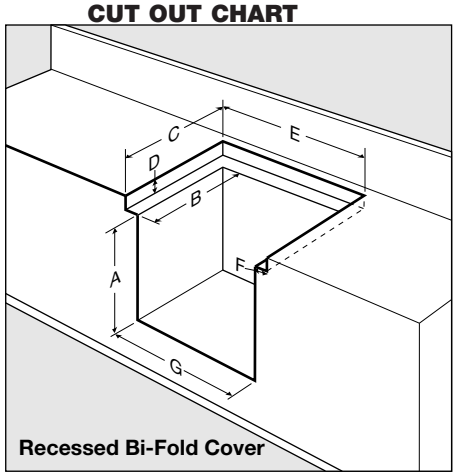

CABINET & COUNTER CUT OUT CHART - TABLEAU DE DECOUPE DES ELEMENTS ET DU COMPTOIR

CUT OUT DIMENSIONS DIMENSIONS DE LA DÉCOUPE	A	B	C (RV/CV)	C (RA/CA)	D	E	F	G
17" RV & RA Ranges	17.75″	20.25″	1.13″†	2.13″†	16″	0″	1.75″	1.5″
Série RV et RA 17”	451MM	514MM	29MM†	54MM†	406MM	0MM	45MM	38MM
21" RV & RA Ranges	17.75″	20.25″	1.13″†	2.13″†	20″	0″	1.75″	1.5″
Série RV et RA 21”	451MM	514MM	29MM†	54MM†	508MM	0MM	45MM	338MM
Slide-In CV & CA	17.75″*	20.25″	1.13″†	2.13″†	3″	0″	1.75″	1.5″
Série CV et CA à encastrement	451MM	514MM	29MM†	54MM†	76MM	0MM	45MM	38MM
17" RV & RA-N Series	17.75″	20.25″	1.13″†	2.13″†	16″	7/16″	1.75″	1.5″
Série RV 43cm RV et RA-N	451MM	514MM	29MM†	54MM†	406MM	11MM	45MM	38MM
21" RV & RA-N Series	17.75″	20.25″	1.13″†	2.13″†	20″	7/16″	1.75″	1.5″
Série RV 53cm RV et RA-N	451MM	514MM	29MM†	54MM†	508MM	11MM	45MM	38MM
Slide-In CV & CA-N Series	17.75″	20.25″	1.13″†	2.13″†	3″	7/16″	1.75″	1.5″
Série CV à encastrement CV et CA-N	451MM	514MM	29MM†	54MM†	76MM	11MM	45MM	38MM

NOTE: Maximum countertop overhang = 3/4” **NOTE:** rebord maximum du comptoir = 19 mm

† Minimum clearance to combustible materials. (typical two (2) sides and back)

* The overall unit depth for CA models with Electronic Ignition is 18-1/4″ from cabinet face to back wall of cutout below counter.

† Éloignement minimum des matériaux combustibles .(Typiquement sur les deux côtés et à l’arrière)

* La profondeur totale des modèles CA à allumage électronique est de (464 mm). Ces dimensions sont celle de la découpe entre la façade de l’élément de cuisine et la paroi arrière du comptoir.

RECESSED BI-FOLD COVER - COUVERCLE PLIANT EN DEUX PARTIES ENCASTRÉ

LAMINATE MATERIAL MATÉRIAU STRATIFIÉ	MPD PART #	RV & RA OVEN 17″	RV & RA OVEN 21″	CV & CA SLIDE-IN	CUT OUT DIMENSIONS - DIMENSIONS DE LA DÉCOUPE					
		A	A	A	B	C	D	E	F	G
1/4″ 6 mm	56397	16.0″ 406 mm	20.0″ 508 mm	3.0″ 76 mm	17.75″ 451 mm	20.0″ 508 mm	2.31″ 59 mm	24.5″ 622 mm	2.13″ 54 mm	20.25″ 514 mm
1/32″ .8 mm	56391	16.0″ 406 mm	20.0″ 508 mm	3.0″ 76 mm	17.75″ 451 mm	20.0″ 508 mm	1.84″ 47 mm	24.5″ 622 mm	2.13 54 mm	20.25″ 514 mm

SCHEMATIC DIAGRAM FOR ELECTRONIC IGNITION MODELS

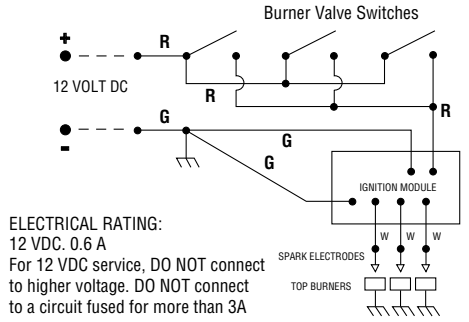

ELECTRICAL RATING:
12 VDC. 0.6 A
For 12 VDC service, DO NOT connect to higher voltage. DO NOT connect to a circuit fused for more than 3A

CONNECTION DIAGRAM FOR ELECTRONIC IGNITION MODELS

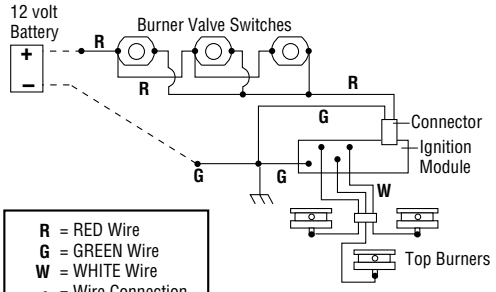

R = RED Wire
G = GREEN Wire
W = WHITE Wire
• = Wire Connection
- - - - = Wired by Installer

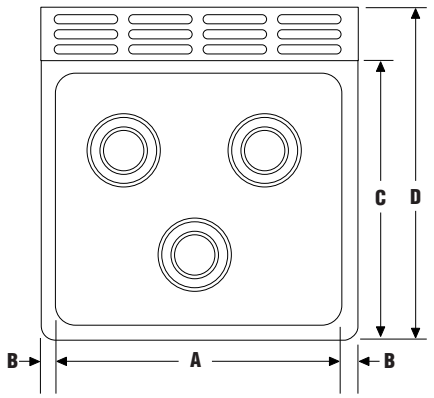

RANGE HOOD MOUNTING INFORMATION

	A	B	C	D
Range Top	19-3/8″			
Mounting Trim		3/4″		
Range Top Depth			15-7/8″	
Range Top plus Oven Vent				19-9/16″

RV Series Range & Slide-In Match Light and Piezo

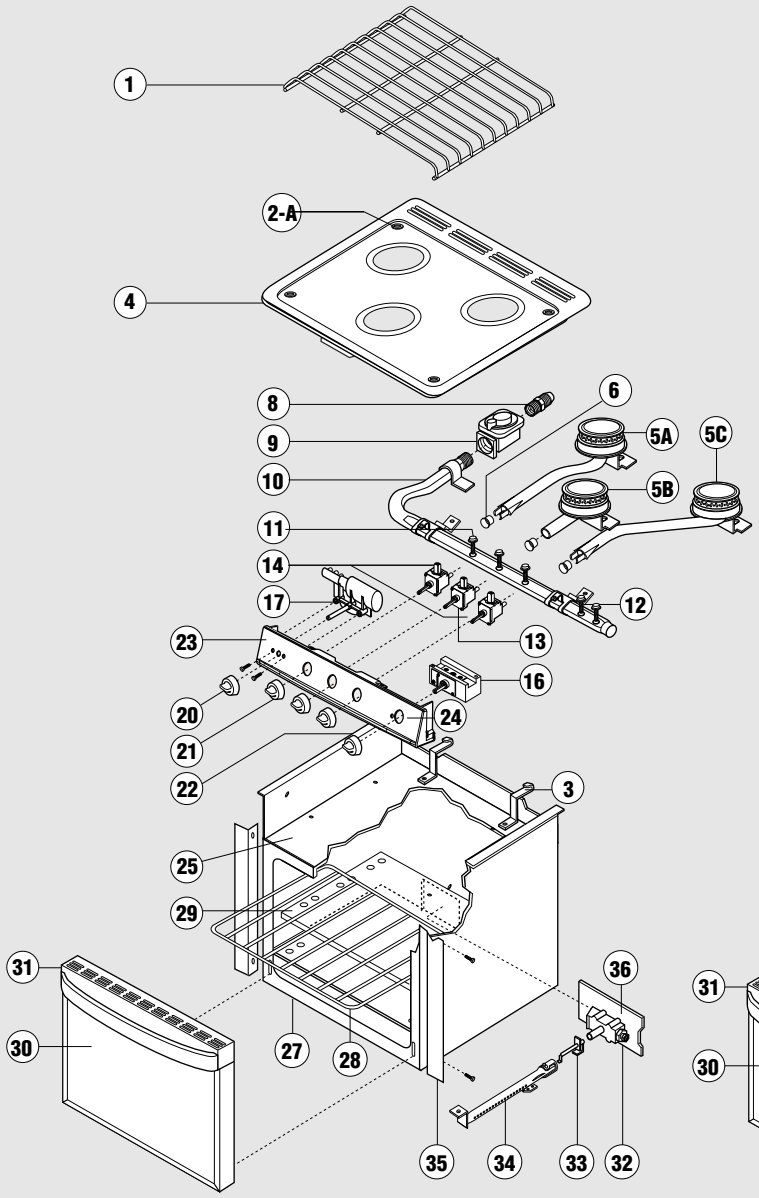

RA Series Range & Slide-In Piezo and Electronic Ignition

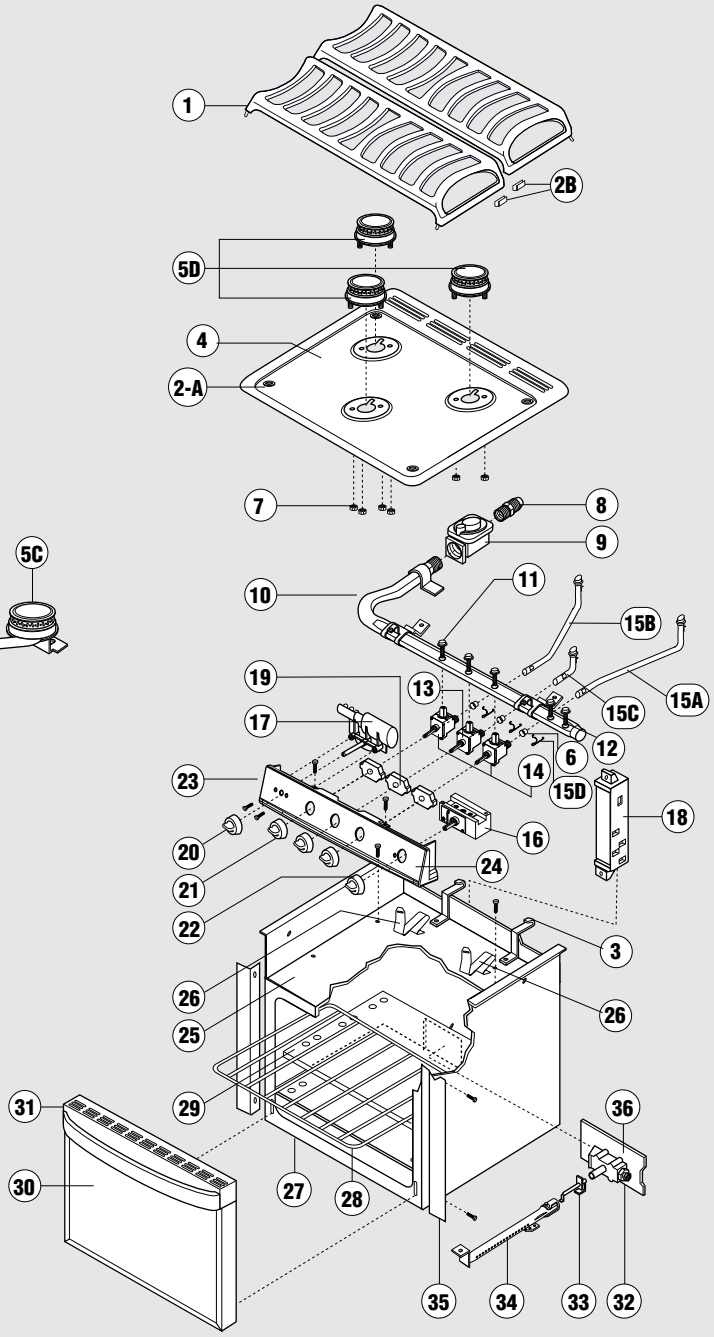

Order by model, color and style not shown in illustration	◆ N/S	commander par couleur pas montré

ATWOOD & WEDGEWOOD
Oven & Slide-In Cooktop Parts Identification

ITEM	DESCRIPTION	WEDGEWOOD			ATWOOD		
		RV		CV	RA		CA
		1732	2132	32	1732	2132	31
1	Grate - black	56272	56272	56272	57190	57190	57190
2A	Grommet (4)	53009	53009	53009	53009	53009	53009
2B	Sealed Grate U-Channel				57194	57194	57194
3	Top Spring Clip (2)	51035	51035	51035	51035	51035	51035
4-A	Range Top Assy - white	52007	52007	52007	57114	57114	57114
4-B	Range Top Assy - black	52008	52008	52008	57113	57113	57113
4-C	Range Top Assy - bisque	52009	52009	52009			
5-A	Burner, Piezo - left rear	56156	56156	56156			
5-A	Burner, Matchlit - left rear	56159	56159	56159			
5-B	Burner, Piezo - center front	56155	56155	56155			
5-B	Burner, Matchlit - center front	56158	56158	56158			
5-C	Burner, Piezo - right rear	56154	56154	56154			
5-C	Burner, Matchlit - right rear	56157	56157	56157			
5-D	Burner, Piezo/Electronic Ignition				57180	57180	57180
6	Bushing, Burner (3)	53011	53011	53011	53011	53011	53011
7	Hex Nut (2)				51004	51004	51004
8	Brass Fitting	52294	52294	52294	52294	52294	52294
9	Pressure Regulator	51062	51062	51062	51062	51062	51062
10	3-Burner Manifold	53198	53198	53199	53198	53198	53199
11	Valve thru Bolt	53207	53207	53207	53207	53207	53207
12	Bolt Oven Thermostat thru Bolt (2)	53208	53208		53208	53208	
13	Valve, Burner-Mini 9000 BTU (1)	53201	53201	53201	53201	53201	53201
14	Valve, Burner-Mini 6500 BTU (2)	53200	53200	53200	53200	53200	53200
15-A	Burner Tube Assy- right rear				57110	57110	57110
15-B	Burner Tube Assy- left rear				57108	57108	57108
15-C	Burner Tube Assy- center front				57109	57109	57109
15-D	Burner Clip, wire (3)				57198	57198	57198
16	Thermostat, oven control	56116	56116		56116	56116	
17	Piezo Ignitor	56096	56096	56096	56096	56096	56096
18	12V Ignition Module				56162	56162	56162
19	Valve Ignition Switch				56163	56163	56163
20A	Piezo Knob -black	51344	51344	51344	51344	51344	51344
20B	Piezo Knob -white	53223	53223	53223	53223	53223	53223
21A	Burner Knob - black	56148	56148	56148	56148	56148	56148
21B	Burner Knob - white	53221	53221	53221	53221	53221	53221
22A	Oven Thermostat Knob - black	53097	53097		53097	53097	
22B	Oven Thermostat Knob - white	53222	53222		53222	53222	
23	Control Panel Assy- w/o Label	◆	◆	◆	◆	◆	◆
24	Control Panel Label	◆	◆	◆	◆	◆	◆
25	Burner Box	51687	51687	51687	51687	51687	51687
26	Burner Spring Clips (3)				57107	57107	57107
27	Oven Can	51969	51970		51969	51970	
28	Oven rack	51069	51069		51069	51069	
29	Oven shelf	51670	51670		51670	51670	
30-A	Door assembly includes handle - black steel	51977	51983		51977	51983	
30-B	Door assembly includes handle - white steel	51978	51984		51978	51984	
30-C	Door assembly includes handle - white glass	51981	51987		51982	51988	
30-D	Door assembly includes handle - black glass	51980	51986		51980	51986	
30-E	Door assembly includes handle - stainless steel	51958			51958		
30-F	Door assembly white handle - white steel	51957			51957		
31A	Oven Door Handle - black	51124	51124		51124	51124	
31B	Oven Door Handle - white	51126	51126		51126	51126	
32	Safety Valve	56120	56120		56120	56120	
33	Pilot Assembly	56121	56121		56121	56121	
34	Burner, oven	56123	56123		56123	56123	
35	Oven Can Trim	51975	51976		51975	51976	
36	Safety Valve Plate	56139	56139		56139	56139	
N/S	Wiring Harness - Electronic Ignition Switches				56164	56164	56164
	Wiring Lead - Electronic Ignition Electrodes				56165	56165	56165
	Wiring Lead - Electronic Ignition Ground				56184	56184	56184
N/S	Wiring Lead - Piezo	56097	56097	56097	56097	56097	56097
N/S	KIT - Door Seal	51060	51061		51060	51061	
N/S	KIT - Gas Tube Kit	51067	51068		51067	51068	

Wedgewood Accessories

Save on these popular accessories!

Order a broiler pan, a lift-up cooktop cover or a bi-fold cover/backsplash direct from Wedgewood and save.

Full-Size Broiler Pan

This beautiful two-piece broiler pan, designed especially for your Wedgewood range, has a durable, easy-to-clean porcelain enamel finish for trouble-free broiling.

Bi-Fold Range Cover and Backsplash

This two-in-one accessory provides extra counterspace when closed and protects the wall behind the stove while you are cooking.

CA/RA and CV/RV Models Available in white or black.

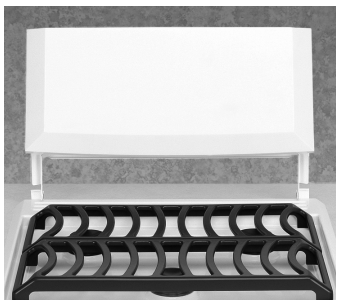

Lift-Up Drop-in Cover

This attractive cover for Wedgewood drop-in units adds valuable counter space—a must for camping. Available for two-and-three burner units in stainless steel. The cover comes completely assembled, with mounting screws and rubber corner guards.

(D Models Only)

TO ORDER THESE WEDGEWOOD ACCESSORIES

Call 866-869-3118 to place a Visa or Mastercard order.
No C.O.D. orders.

Atwood

Atwood Mobile Products
6320 Kelly Wills Road
Greenbrier, TN 37073

PHONE: 615 • 643 • 4556 **FAX:** 615 • 643 • 4616
INTERNET: http://www.atwoodmobile.com

Atwood Extended Service Contract Provides These Extras!

for

ATWOOD WATER HEATER
inner tank

***HYDRO FLAME* FURNACE**
combustion chamber

ATWOOD/WEDGEWOOD RANGE
gas valves & manifold

- ✔ extends coverage to full five years
- ✔ one price covers parts and labor
- ✔ in-shop service (read complete information on form below)

Also available... Service Related Travel

- ✔ Includes mileage travel expense by authorized service center
- ✔ Up to 200 miles total of service travel
- ✔ One full year of coverage

PLEASE USE ORDER FORM BELOW TO BEGIN EXTENDED SERVICE CONTRACT OF YOUR PRODUCT(S).

ATWOOD EXTENDED SERVICE CONTRACTS

$45 ❑

Water Heater Tank—An extended service contract is available covering the parts and labor for replacement of the **inner tank** in the event the water heater tank develops leaks due to corrosion. This extends the original (2) two year warranty an additional (3) three years for a total of (5) five years to the original owner from the original date of purchase of the water heater or vehicle.

$25 ❑

Furnace Combustion Chamber—An extended service contract is available covering the parts and labor for the replacement of the **combustion chamber** in the furnace in the event the combustion chamber were to prematurely fail due to defects in material or workmanship. This extends the original (2) two year warranty an additional (3) three years for a total of (5) five years to the original owner from the date of purchase of the furnace or vehicle.

$15 ❑

Range Gas Valves and Manifold—An extended service contract is available covering the parts and labor for the replacement of **range burner valves and manifold** in the event of premature failure due to defects in material and workmanship. This extends the original (2) two year warranty an additional (3) three years for a total of (5) five years to the original owner from the original date of purchase of the range or vehicle.

All 3 $75 ❑

Save $10.00 by selecting all three Extended Service Contracts.

SERVICE RELATED TRAVEL MILEAGE—$20.00 (See Explanation)

$20 ❑

Mileage Travel Expense—Mileage travel expense is not covered by the Limited Warranty issued with each product. If it is anticipated that it may be inconvenient to transport your vehicle or Atwood product to obtain service you may choose to purchase this Service Mileage option. This will pay up to 200 miles of service travel at 20 cents per mile to an authorized Atwood Service Center whose service personnel travels to your location to perform in-warranty service work on your Atwood product. This is for (1) one year from the original date of purchase of the vehicle or Atwood water heater, furnace or range.

To qualify for any of these options, they must be purchased within 90 days of the vehicle or product purchase. Prices listed are in **US DOLLARS**-please make check amount accordingly. Upon receipt of this completed card together with your check or money order, Atwood will send you a written confirmation of the options you selected.

EXTENDED SERVICE ORDER FORM

Today's Date _____

Date of Purchase _____

Name _____

Address _____

City _____ ST ____ ZIP _____

Phone _____

Your RV Manufacturer's Brand Name _____

Your Dealer's Company Name _____

CONTRACT DESIRED

THE MODEL AND SERIAL NUMBER OF EACH COVERED APPLIANCE IS REQUIRED.

	Model No.	Serial No.		
ATWOOD **Water Heater Tank**	_____	_____	$45.00	❑
HYDRO FLAME **Furnace**	_____	_____	$25.00	❑
ATWOOD/WEDGEWOOD **Range**	_____	_____	$15.00	❑

Save $10—Select All Three from above ❑

MILEAGE TRAVEL EXPENSE $20.00 ❑

Atwood

Atwood Mobile Products
1120 North Main St.
Elkhart, IN 46514