Atwood®
A Division of Dura Automotive Systems
1120 North Main Street • Elkhart, IN 46514
PHONE: 574•264•2131 **FAX**: 574•262•2550
INTERNET: http://www.atwoodmobile.com

MPD 31479

hydro flame™

7900-II / 8000-II Series Furnace

Technical Installation Manual

ENGLISH, FRANCAIS (et Canada)

•Installation

Effective 9/15/04

THIS INSTRUCTION MANUAL IS FOR USE BY AN AUTHORIZED SERVICE TECHNICIAN TO INSTALL *AN ATWOOD - hydro flame*™ *FURNACE.*

INSTALLER: THESE INSTRUCTIONS MUST BE SUPPLIED WITH THE FURNACE TO THE CONSUMER.
CONSUMER: RETAIN THESE INSTRUCTIONS FOR FURTHER REFERENCE.

This furnace design has been certified by the American Gas Association and Canadian Gas Association for installation in recreation vehicles as a MSP Category III furnace. Follow this installation instruction to insure safe operation of the furnace. Failure to install furnace according to this installation instruction nullifies the furnace warranty.

SAFETY ALERT SYMBOLS

Safety Symbols alerting you to potential personal safety hazards.
Obey all safety messages following these symbols.

⚠ WARNING	⚠ CAUTION
avoid possible injury or death	avoid possible injury and/or property damage

⚠ WARNING
FIRE OR EXPLOSION

- **If the information in this manual is not followed exactly, a fire or explosion may result causing property damage, personal injury or loss of life.**

FOR YOUR SAFETY

⚠ WARNING
FIRE OR EXPLOSION

WHAT TO DO
IF YOU SMELL GAS

- Evacuate ALL persons from vehicle.
- Shut off gas supply at gas container or source.
- DO NOT touch any electrical switch, or use any phone or radio in vehicle.
- DO NOT start vehicle's engine or electric generator.
- Contact nearest gas supplier or qualified Service Technician for repairs.
- If you cannot reach a gas supplier or qualified Service Technician, contact the nearest fire department.
- DO NOT turn on gas supply until gas leak(s) has been repaired.

Installation and service must be performed by a qualified Service Technician, Service Center or gas supplier.

INDEX

FURNACE SPECIFICATIONS 1
DIMENSIONS 1
WEIGHT 1
DUCTING CONFIGURATION 1
MINIMUM CLEARANCE TO FLOORBOARDS, WALLS, & SIMILAR COMBUSTIBLE BUILDING MATERIALS 2
SAFETY INFORMATION 1-2
FURNACE INSTALLATION 2-4
CUTOUTS 2
DUCTING 2-3
Flexible Ducting 2
Venting Chart 3
OPTIONAL INSTALLATION - DIRECTIONAL AIR BOX 3
PROPANE GAS CONNECTION 3
ELECTRICAL CONNECTIONS 3
Thermostat Installation 3
Door Installation 3
SYSTEM CHECK TESTS 4
PROPANE GAS PRESSURE 4
FIGURES 1-8 (INCLUDING DC WIRING DIAGRAM) 4
REPLACEMENT PARTS LIST & DRAWING 8

DUCTING CONFIGURATIONS

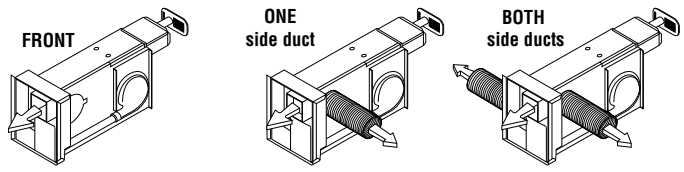

79/80 SERIES
80 SERIES (8012-II)
79 SERIES
79 SERIES

SPECIFICATIONS

(W.C. = Water Column)

MODEL #	7912-II	7916-II	7920-II	8012-II
Input BTU/HR	12,000	16,000	18,000	12,000
Output Capacity BTU/HR	9,160	12,160	13,680	9,120
Duct Static Pressure -	.20" W.C.	.10" W.C.	.10" W.C.	N/A
12 Volt Amperage (AMPS)	3.4	3.4	3.4	1.8
Watts	40.8	40.8	40.8	21.6
Power Supply (Volt DC)	12	12	12	12
MINIMUM RETURN AIR	**35 in²**	**35 in²**	**35 in²**	**35 in²**

DIMENSIONS

ALL MODEL	WIDTH	HEIGHT	DEPTH
Casing	8-3/8″	11-3/8″	20-5/8″
Door	9-7/8″	11-1/2″	1-1/4″

WEIGHT

FURNACE	23 lbs
SHIPPING	25 lbs

MINIMUM CLEARANCE TO

FLOORBOARDS, WALLS & SIMILAR COMBUSTIBLE BUILDING MATERIALS

MUST BE PROVIDED THE FULL LENGTH AND WIDTH OF UNIT

Top and Sides	0″	TO CASING SPACERS (SCREW HEADS)
Extension Box	0″	
Rear	0″	
Bottom	0″	TO CASING SPACERS (SCREW HEADS)

Spacing of 1/4″ to ducting within 3 feet of furnace must be provided unless UL listed wire bound vinyl ducts are used. All ducting material should be rated for continuous use of 200˚F.

NOTE: If zero clearance is maintained from furnace to cabinet structure, a 4″ x 4″ air intake cutout must be provided to blower wheel side of furnace at air intake opening.

NOTE: Clearances are specifically for plywood or similar building materials surrounding the furnace (i.e. furnace should NOT be located under furniture or in a closet space where clothing or other material could be located.)

NOTE: Furnace efficiency rating is a thermal rating determined under continuous operating conditions, independent of any installation. Eff. rate is given at 77% minimum, actual efficiency rating may be higher.

*When furnaces are installed to minimum clearances, an additional 16 in^2 of return air must be provided to blower side of furnace, or a 2″ clearance the full length and height on blower side must be maintained.

⚠ WARNING

CARBON MONOXIDE POISONING

- Furnace must be installed and vented to these instructions.
- Improper installation, adjustment, alteration, service or maintenance can cause injury or property damage.
- Improper installation location may cause furnace to produce negative pressure, affecting combustion air or venting of other appliances.

⚠ CRITICAL INSTALLATION WARNINGS

- DO NOT install furnace on material that restricts return air, like carpet or any soft material such as vinyl.
- DO NOT install where clearance to combustibles cannot be maintained.
- DO NOT modify furnace in any way.
- DO NOT alter furnace for a positive grounding system.
- DO NOT HI-POT furnace unless electronic ignition system (circuit board) has been disconnected.
- DO NOT use battery charger to supply power to DC model furnace even when testing.
- DO NOT use 120 volt AC current with DC models.
- DO NOT use furnace cabinet area as a storage compartment.
- DO NOT vent furnace with venting system serving another appliance.
- DO NOT vent furnace to an outside enclosed porch area.
- DO NOT use for temporary heating of buildings or structures under construction.
- Protect building materials from degrading from flue gas exhaust.
- Protect furnace electrical components from water.

USA AND CANADA - FOLLOW ALL APPLICABLE STATE AND LOCAL CODES - IN THE ABSENCE OF LOCAL CODES OR REGULATIONS, REFER TO CURRENT STANDARDS OF:

- Recreation Vehicles ANSI 1192/NFPA 1192.
- National Fuel Gas Code ANSI Z223.1 /CAN/CGA B149 Installation Codes
- Federal Mobile Home Construction & Safety Standard, Title 24 CFR, part 3280, or when this Standard is not applicable, the Standard for Manufactured Home Installations (Manufactured Home Sites, Communities and Set-Ups), ANSI A255.1 and/or CAN/CSA-Z240 MH Series, Mobile Homes.
- Ground - National Electrical Code ANSI/NFPA No. 70 and/or CSA C22.1
- Park Trailers ANSI 119.5

NOTE: The direct high voltage spark ignition generates a radio frequency that could cause interference with other microprocessor based equipment. Locate equipment at least five feet from furnace location. If this distance cannot be maintained, purchase KIT MPD 37773 (a shielded high voltage lead).

⚠ WARNING

CARBON MONOXIDE POISONING

- Properly seal vent cap to side wall to prevent carbon monoxide from entering coach.
- DO NOT draw combustion air from living area. DO NOT vent exhaust air into the living area or an enclosed porch.

Return air is supplied through openings in furnace grille. The return air passage must be kept clear for furnace to function properly. Refer to **MINIMUM CLEARANCE TO FLOORBOARDS, WALLS & SIMILAR COMBUSTIBLE BUILDING MATERIAL.**

STANDARD FURNACE INSTALLATION

General Installation - LOCATION

- Install extension box and vent cap through an exterior wall.
- DO NOT install furnace near tilt-out rooms, slide-outs, doors or other projections that could obstruct furnace exhaust.
- Locate furnace near midpoint of coach for single furnace applications.
- DO NOT install vent in areas where projections or door openings come within 6″ of vent tube opening.
- DO NOT install furnace in an area where wires, pipes, or other objects will interfere with installation or operation of furnace.
- It is not recommended to install furnace on material that restricts return air, such as directly on carpet, or soft material (like vinyl).
- If you must install furnace on carpet or soft material, install furnace on cleats, or on a wood or metal panel extending the full width and depth of furnace plus minimum clearances to combustibles.

Installation Procedure

ZERO CLEARANCE - AIR INTAKE CUTOUT (FIG 1)

AIR INTAKE OPENING SIDE OF THE BLOWER WHEEL

CUT OUT DIMENSION	A	B	C	D
CABINET WALL	2-3/4″	3-5/8″	4″	4″

A 4″ x 4″ cabinet cut out must be provided when there is zero clearance between furnace and cabinet structure.

1. Set aside combustion air box and exhaust tube extensions for installation from outside coach.

FURNACE / VENT - CUTOUTS (FIG. 2)

CUT OUT DIMENSION	A	B
INTERIOR CABINET WALL	8-3/8″	11-1/4″

DO NOT OVERSIZE HOLE - OVERSIZING CAN RESULT IN WATER LEAKAGE

CUT OUT DIMENSION	C	D	E
COACH EXTERIOR WALL FOR VENT	4-7/8″	2-1/2″	1-3/4″

DUCTING (FIG. 3)

Proper duct installation is critical to operation of furnace. When installing ducts, use materials rated for continuous use at 200˚F. Front discharge temperature should not exceed 250˚F.

Flexible Ducting System

When designing Flexible Duct Systems:

- avoid sharp bends or crushed ducts
- stretch all ducts and run them directly to outlets, keeping quantity and angles of bends to a minimum

2. A variety of vent kits are available to provide the correct venting from furnace to outside of vehicle. To determine **VENT LENGTH (V DIM)**, measure the distance from the back of furnace casing to outside vehicle side wall. For proper vent kit check your **V DIM** on **VENTING CHART**.
3. Ducting available:

TYPE OF DISCHARGE	REMOVE
SIDE ONLY	duct covers from both sides
COMBINATION FRONT & SIDE	front discharge cover plate and side duct cover plate
FRONT ONLY	front discharge cover plate

See **DUCTING CONFIGURATIONS** for covers and their locations.

4. Install the furnace through cutout in cabinet area. Secure furnace with two screws FIG 5-A.

   OPTIONAL - Installation: The 79-II furnace may be installed in a cabinet behind a return air grille FIG 4-I. Door MUST be on furnace. Return air grille must supply a minimum of 35 in^2 of open area and

be in front of door to furnace. Provide an access opening for service and/or removal of furnace. The furnace must be side ducted (NO front discharge). Secure furnace to floor with one screw FIG 4-J.

5. Remove cover plate from furnace FIG 4-D. To install duct adapters for side discharge models, insert back flange over casing and insert tab into square notch, then twist adapter 180° FIG 4-E.
6. Insert furnace into cabinet opening and secure with two screws through holes in control box flanges FIG 5-A.
7. For side duct applications, slide 4˝ flexible ducting material over duct adapters and secure FIG 3.

VENTING

1. To install extension box FIG 4-C, apply mastic or sealant to back of flanges on box. Slide through outside wall cut out and into furnace air channel. DO NOT FORCE OR BEND PARTS.
2. Apply mastic or sealant to the top and sides of outer edge of vent cap. DO NOT PLUG HOLES. Slide assembly over furnace exhaust tube FIG 4-B, push into wall and secure with two screws. Note that bottom flange is not sealed to allow water drainage.
3. The extension box has no minimum clearance requirement FIG 4-C.
4. The vent outlet shall be installed as to be in the same atmospheric pressure zone as the combustion air intake. No modification of vent system is allowed.

⚠ WARNING
CARBON MONOXIDE POISONING

- Properly seal vent system preventing carbon monoxide from entering coach.

5. Install return-air system to ensure negative pressure, created by the circulating blower, does not effect another appliance's combustion air supply or act to mix products of combustion with circulating air. All appliances in the furnace cabinet must be directly vented outside.

DIRECTIONAL AIRBOX INSERT (FIG. 7)

1. Remove front door of furnace.
2. Follow shutdown procedure instructions affixed to furnace.
3. Remove sheet metal screw holding circuit board plate to air box. Retain to fasten Air Box Insert to bottom of air box FIG 7-A.
4. Install Air Box Insert into air box (pay attention to the direction you would like warm air diverted). Make sure two holes in Air Box Insert line up with existing holes in air box FIG 7-B.
5. Fasten Air Box Insert to top of air box using a 1/4˝ long #6 sheet metal screw. Fasten bottom of Air Box Insert and circuit board plate to bottom of air box using the screw removed.
6. Follow lighting instructions to place furnace in operation.
7. Replace front door on furnace.

PROPANE GAS CONNECTION (FIG. 5)

Connect gas line to brass fitting on left side of furnace. Be sure all male pipe threads, other than flare fittings, are treated with a sealing compound resistant to the action of propane (LP) gas. DO NOT put sealing compound on flare fittings.

1. Insert gas line through hole on left side.
2. Connect gas line to brass fitting inside furnace casing immediately ahead of gas control valve FIG 5-B.
3. A 3/8˝ flared fitting connection is provided at gas control valve inlet for gas supply connection to furnace. The gas supply line of furnace must be of adequate size to provide 11˝ W.C. gas pressure. This pressure must be maintained under maximum flow conditions with all gas appliances operating.
4. A 1/8˝ N.P.T. plug is accessible for test gauge connection on gas valve assembly FIG 5-H.
5. Use two wrenches to hold brass fitting and flare nut when tightening gas line to brass fitting. DO NOT twist valve assembly FIG 6.

ELECTRICAL CONNECTION

⚠ WARNING
INJURY OR PROPERTY DAMAGE

- Label all wires before disconnecting for service. Wiring errors can cause improper, dangerous operation. Verify proper operation after servicing.
- Disconnect electrical power before servicing.

Conductor Sizing Table - MAX. 10% VOLTAGE DROP - (12 VDC)

CURRENT DRAW (AMPS)	3	4	5	6	7	8	9	10	15
GAGE	MAX. LENGTH OF SAE CONDUCTOR (IN FEET) FROM SOURCE TO DEVICE								
18	61	45	36	30	26	23	20	18	12
16	96	72	58	48	41	36	32	29	19

⚠ CAUTION
PROPERTY DAMAGE

- This connection is for low-voltage battery or direct current only. Do not connect to 120- or 240- volts AC.

This furnace is designed for negative ground 12 volts DC only. DO NOT attempt to alter furnace for a positive ground system or connect furnace directly to 120 volts AC. Damage to furnace components will occur and warranty will be voided.

Use a minimum of 22-18 GA wire to minimize voltage drop. The furnace must be installed so electrical components are protected from water. To make electrical connections: SEE WIRING DIAGRAM FIG 8

1. Remove screw from junction box on right side of furnace FIG 5-B.
2. Route wiring to right side of furnace.
3. Connect red wire FIG 5-C to positive side of power supply.
4. Connect black wire FIG 5-D to grounded side of power supply.
5. Connect white wire from furnace to thermostat FIG 5-E.
6. Connect thermostat wire from thermostat to +12VDC of power supply FIG 5-F.
7. Reinstall junction box cover FIG 4-F.

For best performance of furnace when power supply is from a converter equipped with a charging port, wire the converter to furnace parallel with battery. This provides consistent voltage to furnace, increasing component life, filtering power surges and AC spikes FIG 4-G & H.

NOTE: All units are supplied with a power switch which when turned off for servicing will remove power through the furnace wiring. Switch must be in **ON** position for the furnace to operate FIG 5-I.

THERMOSTAT INSTALLATION

The thermostat is very sensitive. **HANDLE WITH CARE AT ALL TIMES.** Locate thermostat 48˝ to 54˝ above floor on an INTERIOR wall away from areas of abnormal heat or cold. EXTERIOR wall location must have a 3/4˝ spacer between thermostat and exterior wall.

Follow manufacturer's installation instruction provided with thermostat. When thermostat is not supplied, use a thermostat rated for 12 VDC or 24 VAC min. 1 AMP.

DOOR INSTALLATION

Install door by sliding door flange over control box top flange and fastening door at bottom with 1/4 turn fastener. Note: To assure sufficient return air to circulating blower maintain specified clearances.

SYSTEM CHECKS

⚠ WARNING
FIRE OR EXPLOSION

- Never check for leaks with an open flame.

PROPANE GAS PRESSURE TEST

The furnace and any individual shut-off valve must be disconnected from gas supply piping system during any pressure testing of system at test pressures of more than 1/2 PSI.

Before furnace is connected piping systems must be tested to be leak free. The test must maintain air pressure of at least 6˝ of mercury or 3 PSI for at least 10 minutes.

The entire piping system must be maintained within a range of 10-14˝ W.C. with all appliances in operation. Test gas connections for leakage with a leak test solution.

CONTRÔLES DU SYSTÈME

⚠ AVERTISSEMENT
INCENDIE OU EXPLOSION

• N'essayez jamais de détecter d'éventuelles fuites de gaz avec une flamme nue.

TEST DE PRESSION DU PROPANE

L'appareil de chauffage et tout robinet individuel doivent être isolés de la tuyauterie de l'alimentation en gaz pendant les tests de pression du système à des pressions d'essai supérieures à 3,45 kPa.

Avant le branchement de l'appareil de chauffage, vérifiez que la tuyauterie ne présente aucune fuite. Le

test doit maintenir l'air à une pression d'au moins 152 mm de mercure ou 20,7 kPa pendant au moins 10 minutes.

La tuyauterie tout entière doit être maintenue entre 254 et 356 mm CE lorsque tous les appareils sont en marche. Contrôlez les raccords de gaz afin de détecter d'éventuelles fuites, à l'aide d'une solution pour essai d'étanchéité.

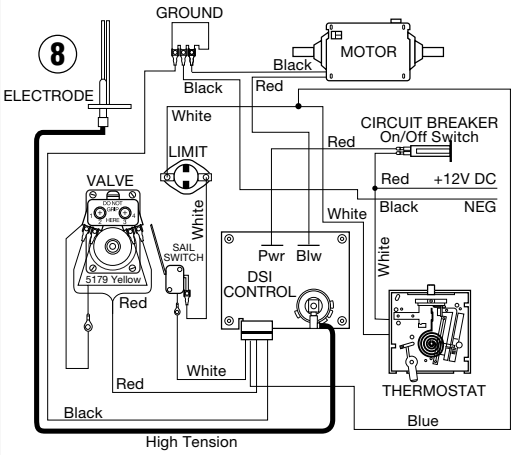

NOTE: The ON/OFF switch, located in line with the gas valve, is not used when a combination circuit breaker and ON/OFF switch is used.

IMPORTANT Wiring must be replaced with wire rated 105˚C or higher.

REMARQUE : L'interrupteur MARCHE/ARRÊT, branché en ligne avec la soupape de gaz, n'est pas utilisé lorsqu'un coupe-circuit combinatoire et un interrupteur MARCHE /ARRÊT sont utilisés.

IMPORTANT : Le câblagé doit être remplace par un cablage conçu pour des températures supérieures ou égales à 105˚C.

VENTING CHART

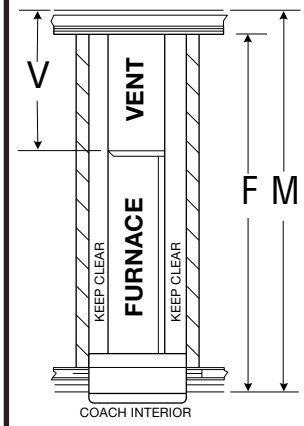

VENT		CABINET DEPTH		VENT KIT NO.		EXTENSIONS		
V DIM.		F DIM.	M DIM.			EXHAUST	TUBE	EXT.
MIN	MAX	MIN	MAX	SS*	ALX	SS*	AL▼	BOX
0″ 0 MM	3-5/8″ 92 MM	20-1/2″ 521 MM	24″ 610 MM	36441	35955	35921	36444	35941
3-5/8″ 92 MM	7-1/8″ 181 MM	24″ 610 MM	27-5/8″ 702 MM	36442	35956	35928	36446	35947
7-1/8″ 181 MM	10-5/8″ 270 MM	27-5/8″ 702 MM	31-1/8″ 791 MM	36443	35957	35930	36448	35951

MAXIMUM RV INTERIOR WALL TO CABINET INTERIOR WALL IS 31″

V DIM = Vent extension length
F DIM = RV INTERIOR WALL to RV cabinet INTERIOR WALL
M DIM = RV INTERIOR WALL to RV CABINET EXTERIOR WALL

SS* - Stainless Steel Tube
AL[t] - Aluminized Tube

LA DISTANCE MAXIMALE ENTRE LA PAROI INTÉRIEURE DU VÉHICULE DE PLAISANCE ET LA PAROI INTÉRIEURE DU COMPARTIMENT EST DE 787 MM.

V dim = Longueur de la rallonge du conduit d'évacuation

F dim = Distance entre la paroi intérieure du véhicule de plaisance et la paroi extérieure du compartiment
M dim = Distance entre la paroi intérieure du véhicule de plaisance et la paroi extérieure du compartiment
inox* = Conduit en acier inoxydable
alu* = Conduit aluminé

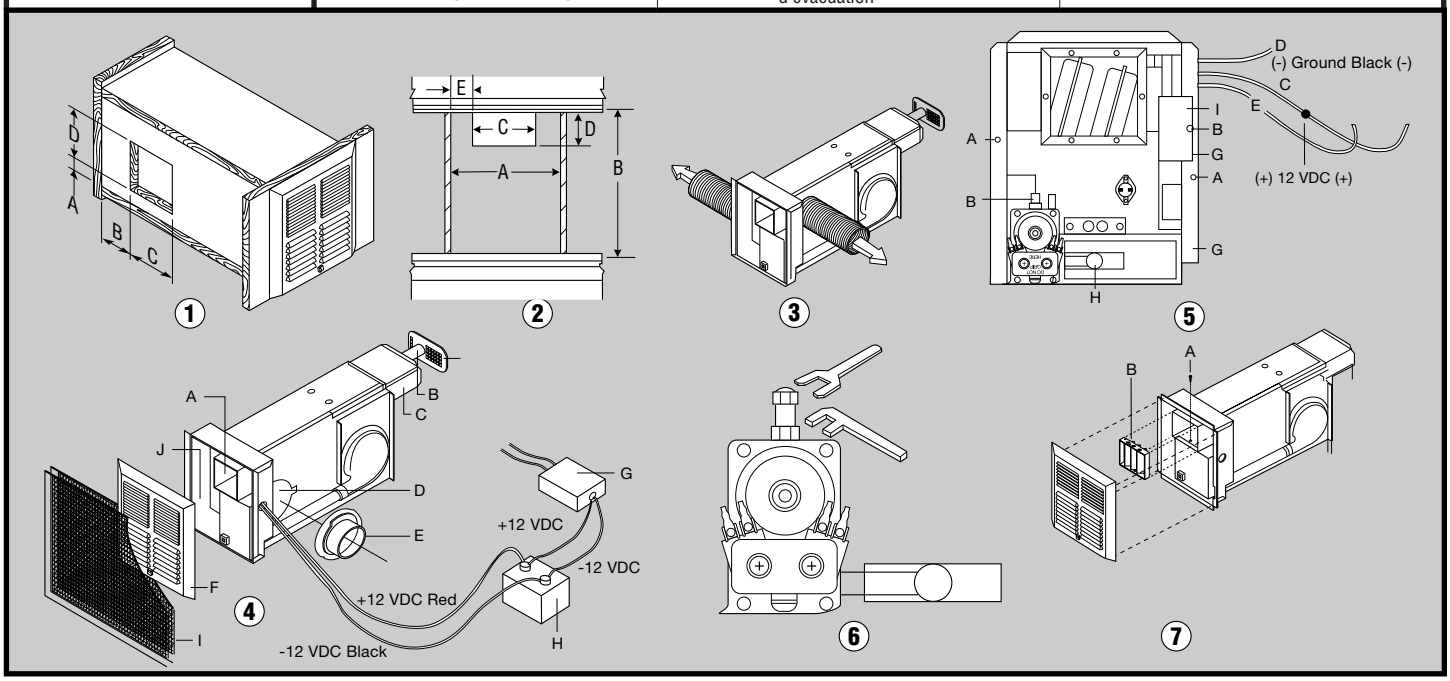

DIAGNOSTIC CHART

FAULT	LED INDICATION
Internal Circuit Board Failure	Steady on, no flashing
Limit switch/Airflow problems	1 flash with 3-second pause
Flame Sense Fault	2 flashes with 3-second pause
Ignition Lockout Fault	3 flashes with 3-second pause

TABLEAU DE DIAGNOSTIQUE

ERREUR	INDICATION DE LA DEL
Panne de la carte imprimee interne	Continue et aucun clignotement
Probleme avec le commutateur de limite/dirculation d'air	1 clignotement puis une pause de 3 secondes
Panne du detecteur de flammes	2 clignotement puis une pause de 3 secondes
Panne du systeme de verrouillage de l'allumage	3 clignotement puis une pause de 3 secondes

hydro flame™

7900-II / 8000-II Series Furnace
Appareil de chauffage à air chaud
Série 7900-II / 8000-II

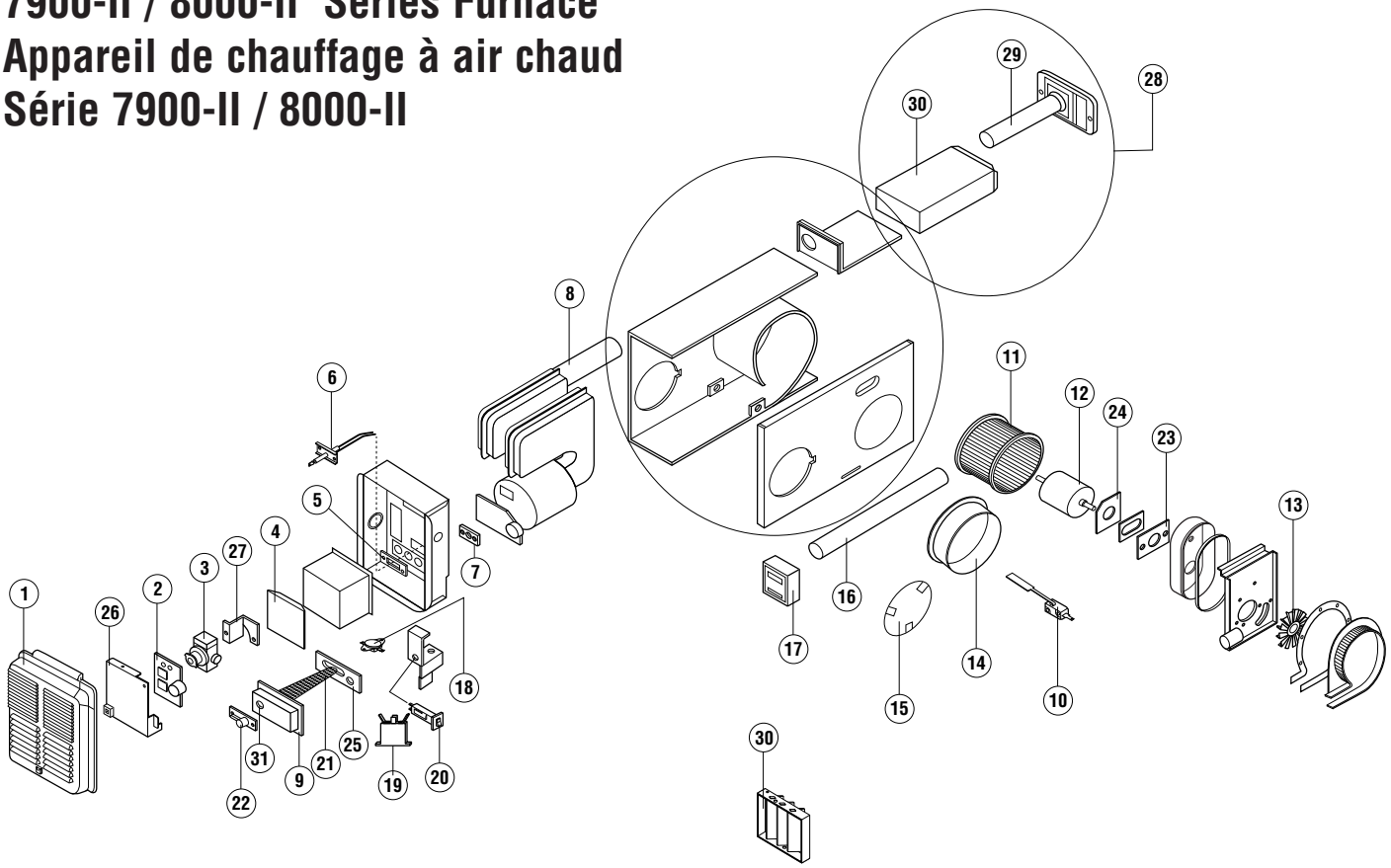

Item #	Description of Parts
1	Front Door
2	Electronic Ignition Board
3	Valve
4	Front Discharge Cover Plate
5	Electrode Cover Plate
6	Electrode
7	Electrode Gasket
8	Heat Exchanger
9	Burner Plate Gasket
10	Sail Switch (79-II)
10	Sail Switch (80-II)
11	Blower Wheel (79-II)
11	Blower Wheel (80-II)
12	Motor (79-II)
12	Motor (80-II)
13	Combustion Wheel
14	Duct Adapter
15	Duct Cover Plate
16	Air Hose
17	Thermostat -SPECIFY COLOR
18	Limit Switch (L-170)
19	Relay
20	On/Off Circuit Breaker
21	Burner Head
22	Manifold
23	Motor Gasket

Item #	Description of Parts
24	Motor Spacer
25	Small Burner Air Baffle - SPECIFY RATE
25	Large Burner Air Baffle - SPECIFY RATE
26	Electronic Ignition Mounting Plate
27	Valve Bracket
28	Vent Kit Specify Length
29	Exhaust Tube Assembly - SPECIFY LENGTH & MATERIAL
30	Air Box Assembly - SPECIFY LENGTH
31	Orifice - SPECIFY RATE

Élément n°	Description des pièces
1	Panneau avant
2	Plaquette d'allumage électronique
3	Soupape
4	Couvercle de l'ouverture d'évacuation avant
5	Couvercle de l'électrode
6	Électrode
7	Joint d'étanchéité de l'électrode
8	Échangeur thermique
9	Joint d'étanchéité de la plaque du brûleur
10	Interrupteur à abattant (79-II)
10	Interrupteur à abattant (80-II)
11	Ventilateur (79-II)
11	Ventilateur (80-II)
12	Moteur (79-II)

Élément n°	Description des pièces
12	Moteur (80-II)
13	Ventilateur d'air de combustion
14	Adaptateur de conduit
15	Couvercle d'ouverture de branchement
16	Tuyau à air
17	Thermostat -PRÉCISEZ LA COULEUR
18	Rupteur thermique (L-170)
19	Relais
20	Coupe-circuit marche/arrêt
21	Tête de brûleur (79II/80II)
22	Collecteur
23	Joint d'étanchéité du moteur
24	Entretoise du moteur
25	Petit déflecteur d'air du brûleur - PRÉCISEZ LES CARACTÉRISTIQUES NOMINALES
25	Grand déflecteur d'air du brûleur - PRÉCISEZ LES CARACTÉRISTIQUES NOMINALES
26	Plaque de montage de l'allumage électronique
27	Support de soupape
28	Module d'évacuation - PRÉCISEZ LA LONGUEUR
29	Exhaust Tube Assembly - PRÉCISEZ LA LONGUEUR ET LE MATÉRIAU
30	Boîte à air - PRÉCISEZ LA LONGUEUR
31	Lumière - PRÉCISEZ LE CALIBRE