DOMETIC

HEATING FURNACES

AFS/DFS, AFM/DFM, AFL/DFL, 79/80, 85/89

EN **DF Series Furnaces**
Service Manual

Form No. 31315 07/18 | ©2018 Dometic Corporation

NORTH AMERICAN ADDRESS INFORMATION

U.S.A. & CANADA
Service Office
Dometic Corporation
1120 North Main Street
Elkhart, IN 46514

Service Center & Dealer Locations
Visit: www.dometic.com

CONTENTS

1 Explanation of symbols and safety instructions 2
2 Intended use 3
3 Operational issues and diagnostics 4
4 General information 6
5 Diagnostic procedures 18
6 Heating Issues 26
7 Service procedures 30
8 Maintenance 41
9 Disposal 43
10 Appendix A: Supplemental bulletins 44

1 EXPLANATION OF SYMBOLS AND SAFETY INSTRUCTIONS

This manual has safety information and instructions to help you eliminate or reduce the risk of accidents and injuries.

1.1 Recognize safety information

This is the safety alert symbol. It is used to alert you to potential physical injury hazards. Obey all safety messages that follow this symbol to avoid possible injury or death.

1.2 Understand signal words

A signal word will identify safety messages and property damage messages, and will indicate the degree or level of hazard seriousness.

WARNING indicates a hazardous situation that, if **not** avoided, could result in death or serious injury.

CAUTION indicates a hazardous situation that, if **not** avoided, could result in minor or moderate injury.

NOTICE is used to address practices **not** related to physical injury.

indicates additional information that is **not** related to physical injury.

1.3 Supplemental directives

Read and follow all safety information and instructions to avoid possible injury or death.
Read and understand these instructions before service or maintenance of this product.
Incorrect service or maintenance of this product can lead to serious injury.
The installation **must** comply with all applicable local or national codes, including the latest edition of the following standards:

U.S.A.

- ANSI/NFPA70, National Electrical Code (NEC)
- ANSI/NFPA 1192, Recreational Vehicles Code

Canada

- CSA C22.1, Parts I & II, Canadian Electrical Code
- CSA Z240 RV Series, Recreational Vehicles

1.4 General safety messages

WARNING Failure to obey the following warnings could result in death or serious injury:

- SERVICE HAZARD:
  - Installation, repairs and preventative maintenance should be done by a qualified service person only.
  - The furnace should be inspected before use and at least annually, by a qualified service person only.
- HIGH TEMPERATURE HAZARD:
  - Do **not** touch or put combustibles on or near the furnace.
  - Supervise young children in the same room as the furnace.
- CARBON MONOXIDE POISONING HAZARD. Improper installation, adjustment, alterations, service, or maintenance can cause death or serious injury.
- ELECTRICAL HAZARD:
  - Label all wires prior to disconnection when servicing. Wiring errors can cause improper and dangerous operation. Verify proper operation after servicing.
  - Do **not** use 120 VAC current with DC models.
- HAZARDOUS WASTE HAZARD. Some old thermostats may contain mercury. Handle with care. Dispose of properly.
- ELECTRICAL SHOCK, FIRE, EXPLOSION, AND/OR CARBON MONOXIDE HAZARD.
  - Use only Dometic replacement parts and components, which are specifically approved for use with the Furnace.
  - Disconnect electricity to the appliance before installation or service.
  - Do **not** cause a short in the control terminals of the appliance.
  - Wiring must conform to local codes and ordinances.

When appliances have time-delay controls, the system's operation will lag behind the thermostat's call for heat.

2 INTENDED USE

This service manual is intended for use by OEM installers and dealer technicians. It is not intended for use by RV owners, or those unfamiliar with the workings of furnaces used in the RV industry.

Manual users are assumed to have a basic understanding of RV HVAC best practices and experience in the proper use of the tools and materials related to installing, operating, maintaining, and servicing of HVAC equipment used in the RV industry.

3 OPERATIONAL ISSUES AND DIAGNOSTICS

This section has tables showing the main causes for furnace issues. The Operational Issues table helps you identify a range of furnace operational issues and the potential servicing solutions associated with those issues. The Diagnostics table links specific furnace components to the diagnostic tasks associated with that component.

Remember to check the basics before replacing any parts, such as loose wiring and overall heating issues. Refer to the Maintenance (on page 41) and Heating Issues (on page 26) sections for more detail.

Review the operational issues table for a list of potential operational issues, possible solutions, and servicing procedure links. Refer to the Diagnostics Table (on page 5) for links to specific diagnostic information on the furnace components, for confirmation of the operational issue.

Operational Issues Table

Operational Issue	Potential Reason	Page
Motor does not run	Defective motor	36
	Defective external relay	37
Fan motor runs but no spark	Low DC voltage	26
	Defective circuit board or ignitor on the circuit board	32
	Combustion wheel is loose	33
	Electrode is defective or out of adjustment	34
	Defective limit switch	35
	Defective motor	36
	Defective sail switch	38
Furnace sparks but does not ignite	Gas pressure issue	26
	Defective circuit board	32
	Electrode is defective or out of adjustment	34
	Defective gas valve	39
	Orifice issue	39
Motor vibrates or is noisy	Blower wheel is damaged	31
	Blower wheel is dirty	41
	Loose object inside the blower wheel	31
	Motor mount is loose	36
	Motor shaft is damaged	36
Burner ignites then locks out	Low gas pressure	26
	Defective circuit board	32
	Combustion wheel is loose	33
	Electrode is defective or out of adjustment	34
Furnace is limiting	Installation issue	26/see specific furnace installation instructions
	Ducting issue	26/see specific furnace installation instructions
	Return Air issue	26/see specific furnace installation instructions
	Defective limit switch	35
Fan and burner turn off	Defective external relay	37

Operational Issue	Potential Reason	Page
Thermostat is calling for heat – no fan/no operation	Air conditioner board issue	18
	DC voltage issue	26
	Defective circuit board	32
	Defective motor	36
	Defective external relay	37
	Defective sail switch	38
Fan runs continuously with thermostat set to off	Defective circuit board/fan relay on board is stuck closed	32
	Defective external relay	37
Visible buildup of soot	Gas pressure issue	26
	Combustion wheel is loose	33
	Defective motor	36
	Defective gas valve	39
	Orifice issue	39
	Incorrect exhaust tube (AF model furnaces)	41
Circuit board is getting wet on the AFM series furnace	Door installation issue	26/see specific furnace installation instructions
	Circuit board is lying on the floor of the furnace	32

Diagnostics Table

Diagnostic Area	Page	Diagnostic Area	Page
AC Board/Thermostats	18	Electrode	22
Blower Wheel	18	Limit Switch	22
Burner Head	19	Motor	23
Circuit Board	19	Relay	23
Circuit Breaker Switch	21	Sail Switch	24
Combustion Wheel	22	Solenoid/Gas Valve	25

4 GENERAL INFORMATION

This section provides reference information on the tooling, model identification, components, operation, and terminology associated with the different furnace models.

4.1 Tools and materials

Required Tools	
U-tube manometer with 1/8" pipe nipple	Incline manometer
Multimeter	Circuit board tester
Air-speed indicator	Long-handled Allen wrenches (9/64" and 1/8")
Leak-test solution	1/4" nut driver
Open-end wrenches	Flat-blade screwdriver
Phillips screwdriver	Safety glasses

Optional Tools and Materials	
Flashlight	Two pipe wrenches
Wire nuts (various sizes)	Wire cutter
Wire stripper	Electrical tape
Scissors or utility knife	Metal duct tape
#8 Self-tapping sheet-metal screws	Wire cleaning brush
Compressed air cannister	Cleaning solution and towels

4.2 Model identification

Data/Model Tag

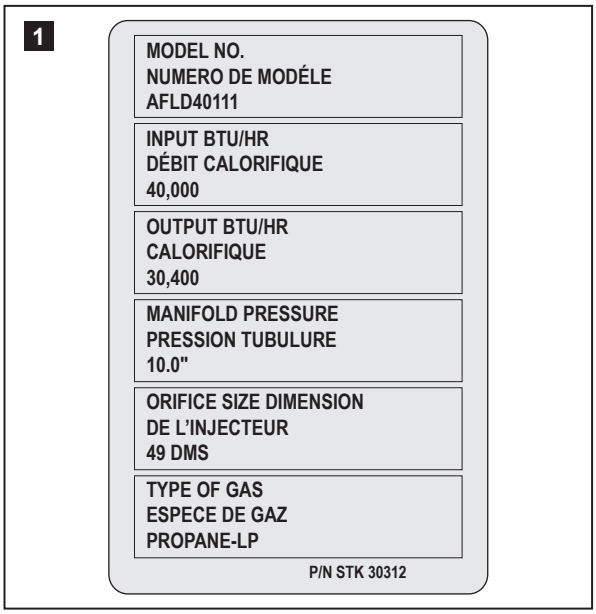

Serial Number Tag

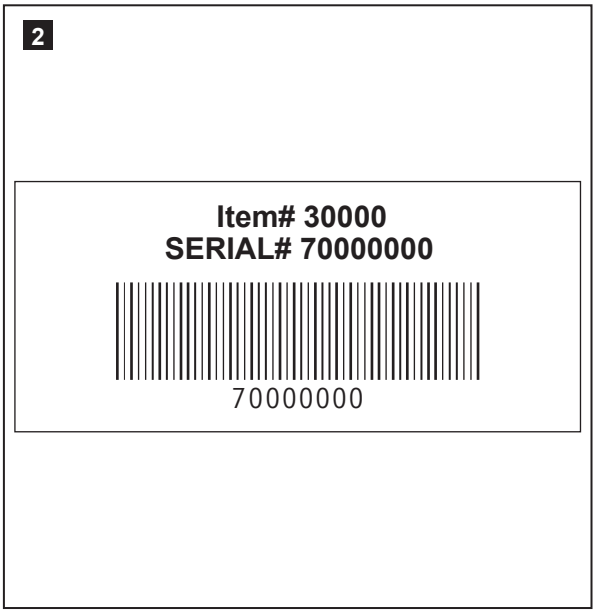

AF/DF Series

DF M D 30 1 1 1

- Rate Stages
- Door Style
- Type of Gas
- BTU/hr Rating
- Voltage
- Cabinet Size
- Furnace Type

Model number example: DFMD30111

Furnace Type	Cabinet Size	Voltage	BTU Rating		Type of Gas	Door Style	Rate Stages
DF = Dometic Furnace	S = Small	DC = DC Voltage	12 = 12,000	35 = 35,000	1 = LP Gas	1 = Door	1 = Single
AF = Atwood Furnace	SA = Small Low Amps (for small furnaces only)	AC = AC Voltage	16 = 16,000	40 = 40,000	2 = LP or Natural Gas	2 = No Door	
			20 = 20,000			3 = Door w/Rear Gas Fitting	
	M = Medium		25 = 25,000			4 = Door w/ Connector	
	L = Large		30 = 30,000			5 = Door w/Rear Gas Fitting & Connector	

79/80, 85, 89 Series

85 35 DC LP IV

- Version
- Type of Gas
- Voltage
- BTU/hr Rating
- Furnace Type

Model number example: 85-35 DCLP IV

Furnace Type	BTU Rating		Voltage	Type of Gas	Version
79 = 7900 Series	12 = 12,000	31 = 31,000	DC = DC Voltage	LP = LP Gas	(no #) = Version 1
80 = 8000 Series	16 = 16,000	35 = 34,000	AC = AC Voltage	LP/NAT = LP or Natural Gas	II = Version 2
85 = 8500 Series	20 = 20,000	40 = 40,000			III = Version 3
89 = 8900 Series	25 = 25,000				IV = Version 4

85/89 Series Two-Stage

1522 DC LP

- Type of Gas
- Voltage
- Model

Model number example: 1522 DC LP

Model	BTU Rating (low)	BTU Rating (high)	Voltage	Type of Gas
1522	15,000	22,000	DC = DC Voltage	LP = LP Gas
2334	23,000	34,000		
2540	25,000	40,000		

4.3 Component locations

AF/DF Series

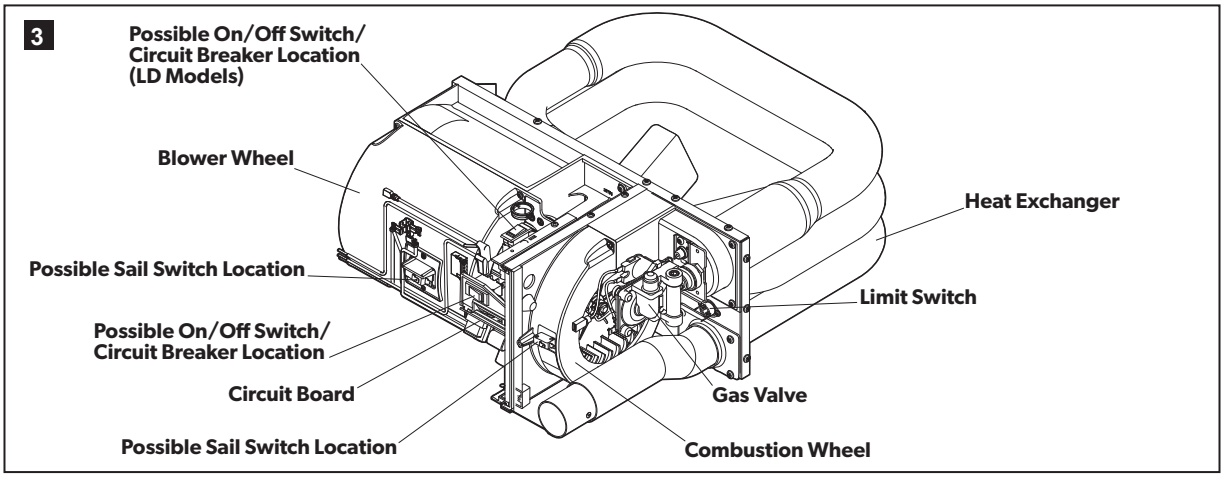

79/80 Series

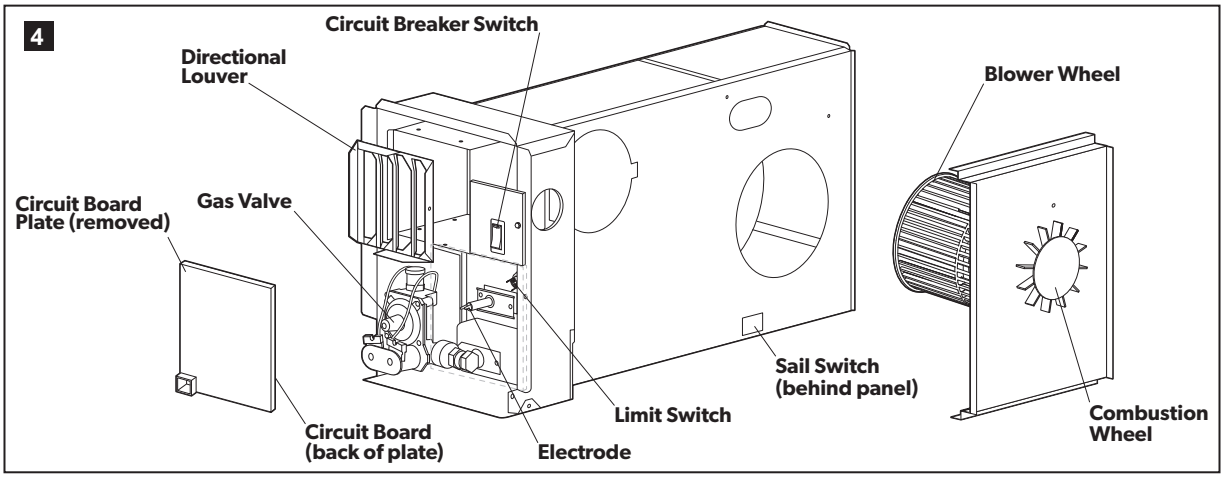

85/89 Series

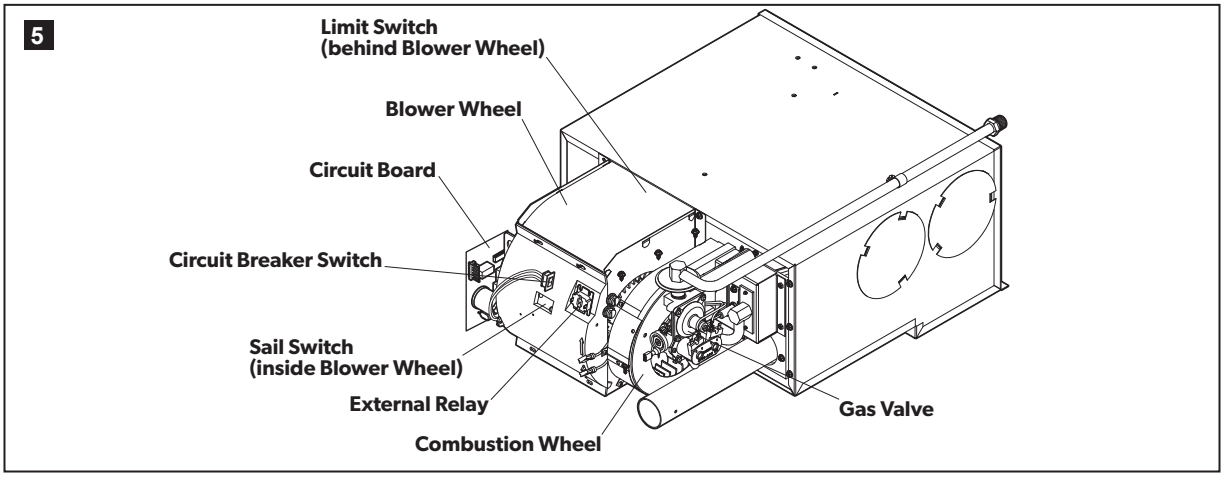

4.4 Sequence of operation/wiring diagrams

The wiring diagrams shown are the best representations of each furnace. Wire colors may vary.

Understanding the sequence of operations for a furnace is an important part of diagnosing the operational issues occurring in the furnace. This section details the wiring and sequence of operation for each furnace type:

- DC Models (on page 9)
- AC Models (on page 12)
- Two-Stage Models (1522, 2334, and 2540) (on page 14)

DC Models

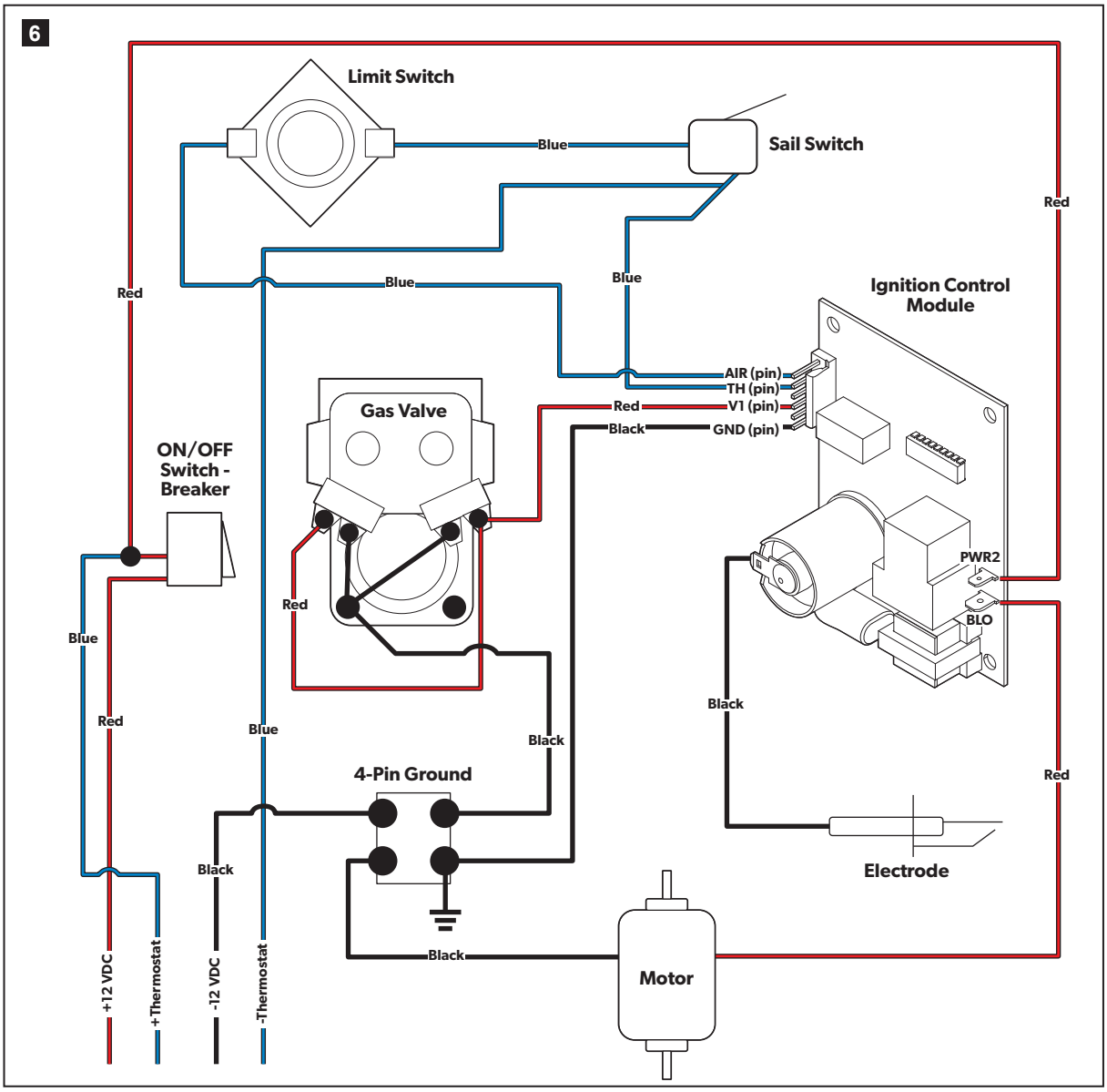

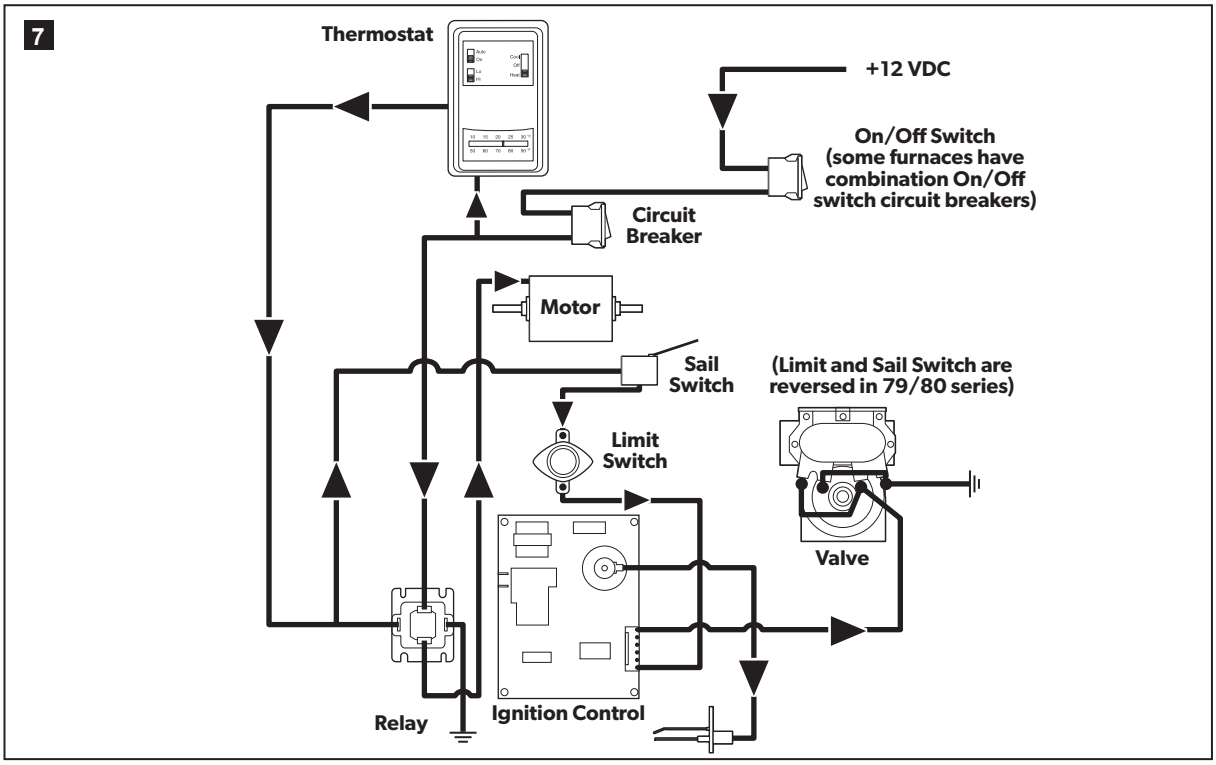

This diagram shows the external relay used in furnaces built prior to 07/2001.

Sequence of operation for DC models (standard units):

1. The ON/OFF switch allows power to pass through the circuit breaker to the thermostat.
2. The thermostat controls the operating circuit to the furnace by reacting to room temperature. When room temperature is below the thermostat set-point, the contact closes to allow current to flow to the relay **(the relay can be either external or part of the ignition control board)**.
3. The circuit breaker limits the amperage draw of the motor.
4. The relay allows current to pass to the motor by closing a switch within the relay. Voltage from the thermostat activates the relay to turn the fan on. This takes 1–25 seconds. **On units that have the relay on the ignition control board, there is only a 1–2 second delay.**
5. Current flows to the motor to operate the blower. One end of the motor shaft is for the blower wheel, and the other side is for the combustion wheel.
6. Circulating air blows against the sail switch and closes the contacts, completing the circuit. The sail switch is a safety device that ensures airflow before ignition.
7. The limit switch is a safety device that protects the furnace from overheating. The contacts in the limit switch open at a given temperature setting, shutting off power to the electronic ignition system that controls the gas valve. As power is applied to the circuit board, the system does the following:
   - A timing circuit allows the blower to purge the chamber (15–17 seconds).
   - The circuit board supplies current to the gas valve and causes it to open. As the gas valve opens, the circuit board sends a high-voltage spark to the electrode at the burner. The circuit board detects the presence of a flame.
     - If the flame is not sensed after approximately six seconds, the valve will close and the chamber will be purged of any gas. After three tries for ignition, the control will lock out for one hour, unless power is removed or the thermostat has cycled. Shutting off the main power will restart the cycle.

- If the system does not ignite and the thermostat remains closed on units with an external relay, the blower will remain on until the thermostat is reset manually. **Units with the relay on the ignition control will shut the blower off even if the thermostat contacts remain closed**. If the thermostat is not reset within one hour, the system will try the ignition cycle again.

8. When the thermostat senses that the desired room air temperature contact is open, it will shut off power from the ignition system and shut off the gas valve. The blower continues to run until the relay opens the circuit (approximately 90 seconds), shutting off current to the motor.

On newer controls, a diagnostic error code light has been added. By counting the flashes of the light, an error code can be determined. See the Code Failure Table for code failure information.

Code Failure Table

Number of Flashes	Diagnostic Information	Explanation/Recommended Action
One (1) Flash with Three-second (3) Pause	Airflow/Limit Fault	Fan is running. No power is present at the air flow terminal on the board. Potential cause are: • Sail switch is not closing • Limit switch is open • Fan is not turning fast enough to close the sail switch Check for voltage issues (see page 29) or a bad fan motor (see page 23).
Two (2) Flashes with Three-second (3) Pause	Flame Sense Fault	The board is not sensing a flame. Check for a faulty circuit board (see page 19) or a defective electrode (see page 22).
Three (3) Flashes with Three-second (3) Pause	Ignition Safety Lockout	The furnace attempted ignition three times and failed to light. The failed attempts caused a one-hour soft safety lockout of the furnace.
No Flashes, Steady Light	Internal Control Failure	Check for a faulty circuit board (see page 19).

AC Models

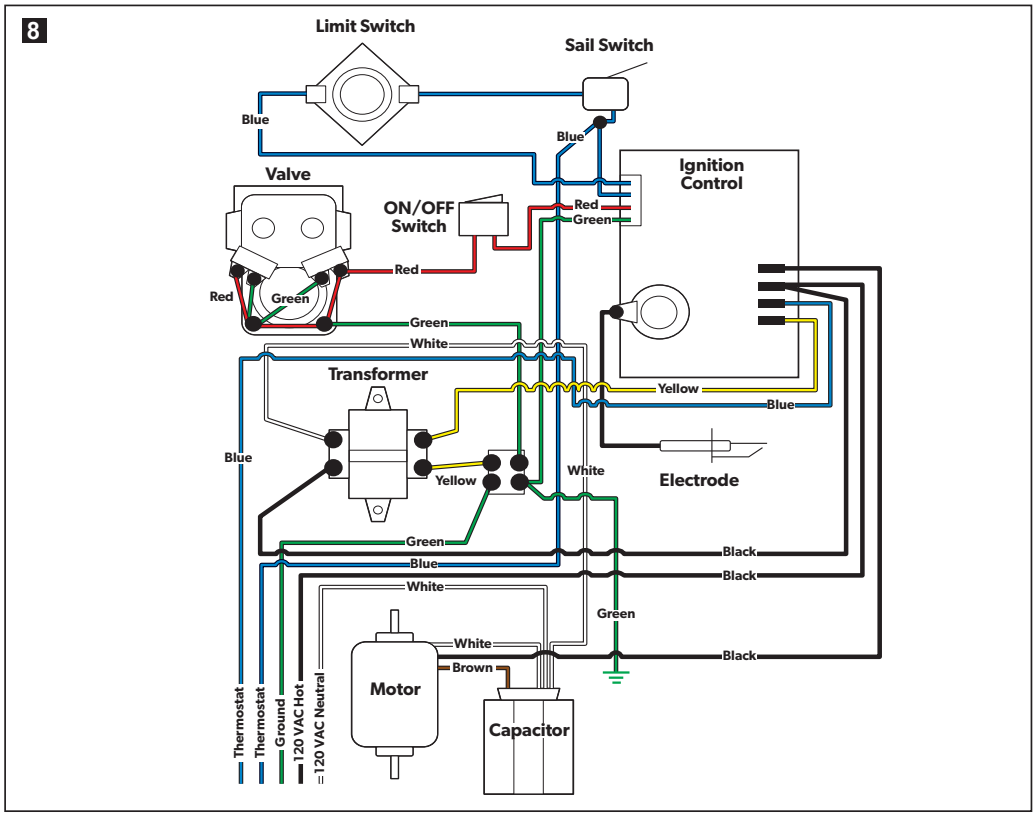

24 VAC

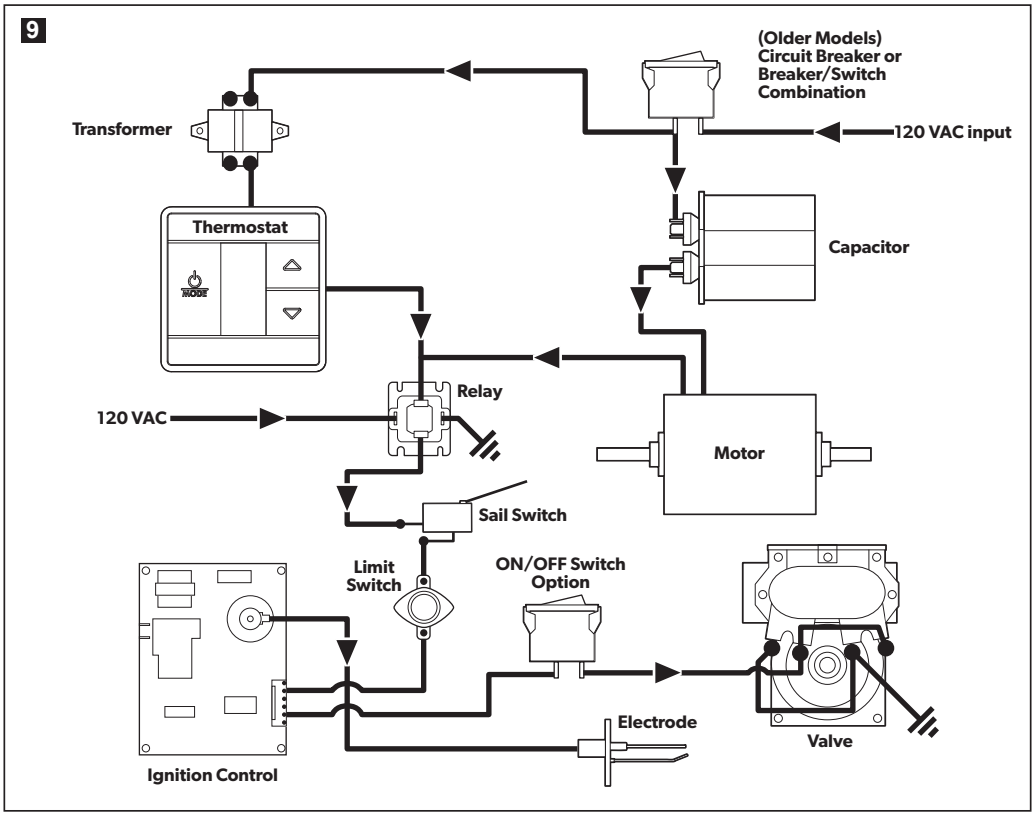

Sequence of operation for AC models:

1. The transformer receives 120 VAC, which it converts to 24 VAC for the operating circuitry.
2. The thermostat controls the operating circuit to the furnace by reacting to room temperature. When room temperature is below the thermostat set-point, the contacts close to allow current to flow to the relay **(the relay can be either external or part of the ignition control board)**.
3. The relay receives 24 VAC and energizes a heater coil within the relay. **With relay-on-the-board models, timing is controlled through the microprocessor**. A bi-metal disc is activated and closes the relay circuit (17–20 seconds). **On controls with a built-in relay, there is only a 1–2 second delay**.
4. Once the relay circuit is closed, 120 VAC flows to the motor to operate the blower. One end of the motor shaft is for the blower wheel and the other end is for the combustion wheel.
5. Circulating air blows against the sail switch and closes the contacts, completing the circuit. The sail switch is a safety device that ensures airflow before ignition.
6. The limit switch is a safety device that protects the furnace from overheating. The contacts in the limit switch open at a given temperature setting, shutting off power to the electronic ignition system that controls the gas valve.
7. As power is applied to the electronic ignition circuit board, the system does the following:
   a. A timing circuit allows the blower to purge the chamber (15–17 seconds).
   b. The circuit board supplies current to the gas valve and causes it to open. There is an electrical switch in-line to the valve that allows power to be manually shut-off from the valve. This switch must be on for the furnace to operate. The switch may be separate or combined with the circuit breaker.
   c. As the gas valve opens, the circuit board sends a high-voltage spark to the electrode at the burner. The circuit board detects the presence of a flame.
      - If the flame is not sensed after approximately six seconds, the valve will close and the chamber will be purged of any gas. After three tries for ignition, the control will lock out for one hour, unless power is removed or the thermostat has cycled. Shutting off the main power will restart the cycle.
      - If the system does not ignite and the thermostat remains closed, the contacts open to shut off power from the valve, which shuts off the gas. The blower will remain on until the heater coil within the relay cools and the relay opens to stop the current flow to the motor. **With relay-on-the-board models, timing is controlled through the microprocessor.**

On newer controls, a diagnostic error code light has been added. By counting the flashes of the light, an error code can be determined. See the Code Failure Table for code failure information.

Code Failure Table

Number of Flashes	Diagnostic Information
1	Low Input Voltage
2	Ignition Failure
3	Open High Limit
4	Stuck APS (Sail Switch)
5	Module Fault

Two-Stage Models (1522, 2334, and 2540)

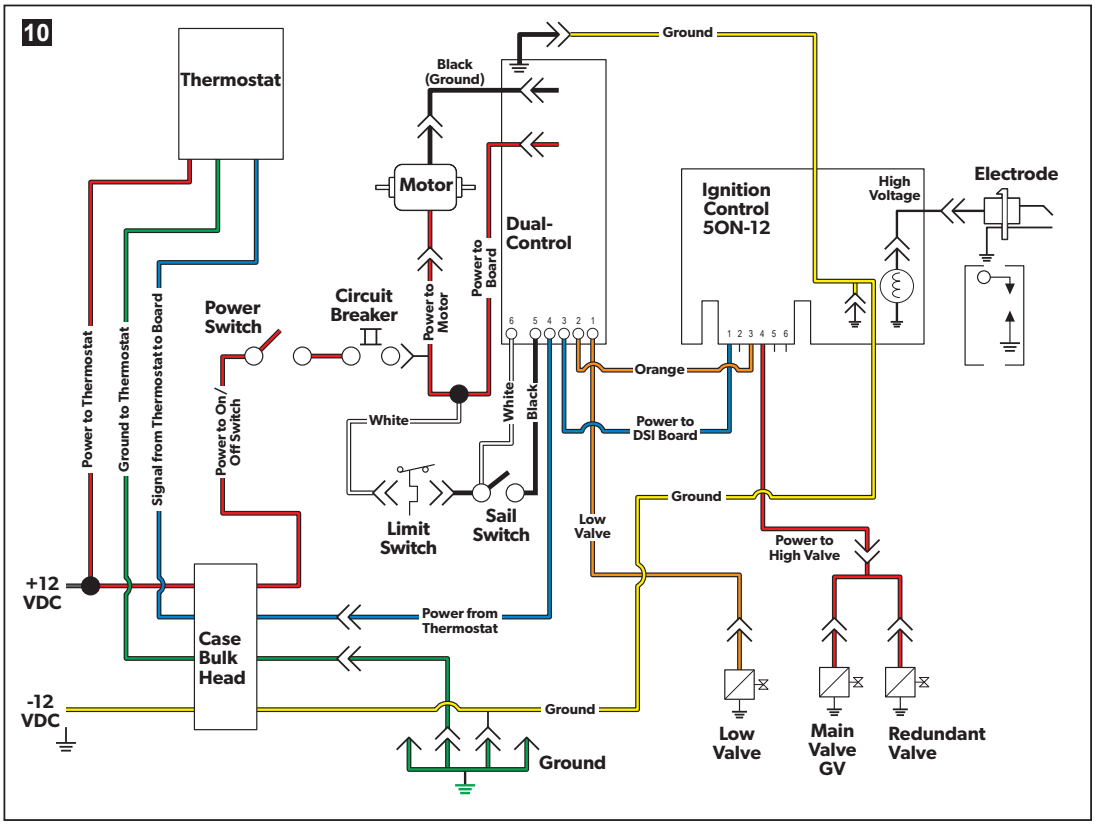

The only compatible thermostat for the two-stage furnace is the Atwood digital thermostat (PN#38535).

Sequence of operation for two-stage models:

1. The digital thermostat controls the operating circuit to the furnace by reacting to room temperature. When the room temperature is below the thermostat set-point by 2 °F, a heat-demand signal will be sent to the controller module.
2. The ON/OFF switch is a safety device that shuts off power to the furnace ignition and gas valve systems.
3. The circuit breaker limits the amperage draw of the motor.
4. Current flows to the controller module and during the first seconds, the microprocessor confirms input and verifies correct operation of safety redundancies. This module will perform the following diagnostic checks of the system:
   - Open sail switch
   - Internal microprocessor faults
   - Voltage inputs
   - Ignition
   - Open limit switch

   In the event of a failure, an LED on the controller module will flash a code. On newer controls, a diagnostic error code light has been added. By counting the flashes of the light, an error code can be determined. See the Code Failure Table for code failure information.
5. The motor receives current from the controller module and will run at high speed or low speed, depending on the demand signal the digital thermostat sends to the controller module. One end of the motor shaft is for the blower wheel and the other end is for the combustion wheel.

6. Circulating air blows against the sail switch and closes the contacts, completing the circuit. The sail switch is a safety device that ensures airflow before ignition.
7. The limit switch is a safety device that protects the furnace from overheating. The contacts in the limit switch open at a given temperature setting, shutting off power. This activates the open limit switch diagnostics and the LED on the controller module flashes, shutting down the gas valve. See the Code Failure Table for code failure information.
8. As power is applied to the circuit board, the system does the following:
   a. Timing circuits allow the blower to purge the heat chamber for 15 seconds.
   b. When current is supplied to the gas valve, it opens to high-burn stage. The controller module activates the low-burn operation on the valve.
   c. As the valve opens, the ignition module sends a high-voltage spark to the electrode at the burner.
   d. The ignition module detects the presence of a flame.
      - If the flame is not sensed after seven seconds of sparking, a signal is sent to the controller module that there is no ignition and the controller module shuts off the gas valve.
      - After another 24-second purge, the ignition module will try again.
      - After a third try, the controller will go into a soft safety lockout, timing for one hour, and the diagnostic LED will flash a code. See the Code Failure Table for code failure information.
      - After the timed hour, the controller will initiate three more tries for ignition. If there is no ignition, the timing sequence begins again.
      - If the system does not ignite and the thermostat is still calling for a heat demand, the blower will continue to run for approximately 90 seconds as a post purge, then shut off. When the thermostat senses the desired room air temperature, a signal is sent to the controller module to shut down operation of the gas valve and run the blower for 90 seconds as a post purge of heat from the furnace heat chamber.

Two-stage operation in automatic mode, when temperature is within 1 °F of the set-point of the thermostat, starts the furnace in low-burn mode. If the temperature is above 1 °F of the set-point of the thermostat, the furnace will start in high-burn mode. The thermostat can also be set to manual for either high or low modes. This will not allow the unit to switch automatically with temperature changes.

Code Failure Table

Number of Flashes	Diagnostic Information
1	Low Input Voltage
2	Ignition Failure
3	Open High Limit
4	Stuck APS (Sail Switch)
5	Module Fault

4.5 General furnace terminology

Term	Definition
AC Motor	A motor operating on 120 VAC
Adjustable Register	A heat outlet capable of being opened and closed
Air Speed Indicator (Anemometer)	A tool used to measure the velocity of air movement from a duct outlet
Ambient Air Temperature	Current room air temperature
Amp Draw	The amount of current required to run a given component
Burn Off	The time it takes for the furnace combustion chamber to burn off all the oils and lubes used in production
Burner	The component in the furnace where combustion occurs, creating the main source of heat within the combustion chamber
Burner Flame Lift Off	When the flame lifts off of the burner
Candling	A small flame at the main burner orifice when the valve is in a closed position
Circuit Breaker	A normally closed switch that automatically interrupts an electrical circuit under an abnormal Amp load
Circulating Air	Air drawn into the furnace by the main air wheel then heated and forced out the heat outlets
Combustion Air	Air supplied to the burner specifically for combustion
Combustion Chamber	The component where combustion occurs and transfers heat to the circulating air
Converter	Component that is used to change 120 VAC to 12 VDC. Available in linear, ferroresonant, and switching styles
Cycling	The normal on and off operation of the furnace as controlled by the thermostat
DC Motor	Motor operating on 12 VDC
Ignition Circuit Board	A circuit board in the furnace controlling the ignition sequence. Evaluates whether a flame has been established

Term	Definition
Electrode	A conductor that establishes an electrical spark at the burner to ignite the air-to-gas mixture. Senses and signals the circuit board that a flame is established
Fan Switch	A normally open switch that closes at a set temperature to allow power flow to the motor. Enables the motor to run after the burner shuts down to cool the combustion chamber
Field Electrical Hook-Up	The wiring harness that connects the furnace to the coach wiring
Flair Fitting	Brass fitting used to connect the furnace to the gas supply that has a flared copper tube
Flashback	A condition created when the flame burns back at the main burner orifice
Flex Ducting	A round, collapsible, wire-reinforced product used to deliver the heated air from the furnace to the living area
Forced Combustion	The type of combustion created when a second air wheel is used to force air into the burner, increasing the air-to-gas mixture
Gas Pressure	The amount of gas being supplied to the furnace, measured in inches of water column (W.C.)
Gas Valve	A mechanical device by which the flow of gas is started or stopped by an electrical signal
Gravity Combustion	A type of combustion that uses natural airflow to supply combustion air to achieve the proper air-to-gas mixture at the burner
Hard Ducting	Ducting installed below the floor line
Heat Anticipator	Component of a thermostat that can be adjusted to increase or decrease the length of a heating cycle
Heat Exchanger	See combustion chamber
High-Tension Lead Wire	The wire carrying the high-voltage spark from circuit board to electrode

Term	Definition
Incline Manometer	Tool used to measure static pressure of the furnace plenum
Junction Box	An enclosure inside the furnace that houses wire connections
Limit Switch	A normally closed switch that opens at a set temperature to prevent the furnace from overheating
Limiting	A condition where the burner turns on and off rapidly. Caused by overheating the limit switch
Loud Ignition	A condition where the burner lights with a loud noise. Caused when the air-to-gas mixture is unbalanced or the spark gap is incorrect
Main Burner Orifice	The orifice regulating the amount of gas delivered to the burner
Manifold	The piping that delivers gas from the gas connection to the valve or from the valve to the burner
Manual Reset Switch	A limit switch requires a manual reset after a set temperature has been reached
Micro-Amps	Current sent back to the circuit board to establish the presence of a flame at the main burner
Multi-Try Circuit Board	A circuit board that runs two to three trials for ignition
O.E.M.	"Original Equipment Manufacturer." A manufacturer of recreational vehicles and parts
Pigtail	See Field Electrical Hook-Up
Plenum	A enclosure that gathers air and redirects it to specific locations, like the box around the combustion chamber
Power Supply	A source of electrical power; usually a converter, inverter, or battery
Primary Air	A portion of the combustion air directed into the main burner
Resonating	A whining noise created by a burner, air movement, or a blower out of balance

Term	Definition
Return Air	Air pulled into the furnace, heated, and forced through duct outlets into the living area
Safety Lockout	Caused when the circuit board does not sense a flame and cuts power to the gas valve
Sail Switch	Air-proving switch that engages when the blower motor provides enough air to close the switch
Secondary Air	Combustion air that is forced around the burner to complete combustion
Sensor Wire	Wire carrying an electrical signal from the electrode back to the circuit board on a remote-sense system
Slope Gauge	See incline manometer
Soot	A black powder created when incomplete combustion occurs. Normally found at an exhaust opening
Start Capacitor	A device that gives an electrical boost to the A/C motor during start-up
Static Pressure	Amount of pressure inside the furnace plenum or duct, caused by the inability to dispel air from duct outlets
Thermostat	Device used with the furnace to sense and regulate the room air temperature
Time-Delay Relay	A normally open relay. When activated, it closes to send power to the blower motor. When deactivated, it allows the blower to run for a period of time to cool the combustion chamber
Transformer	Device reducing 120 VAC to 24 VAC
U-Tube Manometer	Tool measuring gas pressure in inches of W.C.
Volt-Ohm Meter (VOM)	Meter for reading voltage and Ohm resistance
Valve Coil	Electromagnetic coil on the gas valve that is used to open and close the valve and start and stop gas flow

>> Return to Operational Issues and Diagnostics

5 DIAGNOSTIC PROCEDURES

⚠ WARNING ELECTRICAL SHOCK, FIRE, EXPLOSION, AND/OR CARBON MONOXIDE HAZARD. Use only Dometic replacement parts and components, which are specifically approved for use with the Furnace. Failure to obey this warning could result in death or serious injury.

This section has information to help you identify a range of furnace problems by diagnosing individual component parts. Remember to check the basics before replacing any parts, such as loose wiring and overall heating issues. Refer to the Maintenance (on page 41) and Heating Issues (on page 26) sections for more detail.

Component	Diagnostic Question	Action Based On Status	Page
Air Conditioner (AC) Board/Thermostats			
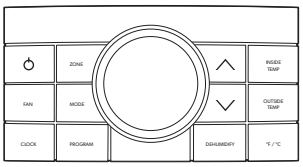 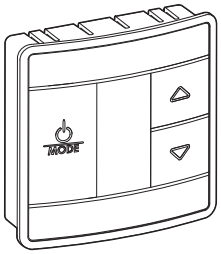	When the thermostat calls for heat, does the relay on the AC board close (to create continuity and complete the circuit) and send power to the thermostat terminal on the furnace board (or external relay depending on the model)?	When the thermostat is calling for heat, check for continuity at the AC control board or thermostat where the two furnace wires connect. To diagnose if the issue is with the AC board/thermostat or with the furnace, bypass the furnace wires at the thermostat: • If the furnace ignites and heats, the problem is with the thermostat or the AC control board • If the furnace does not run, the problem is with the furnace • If no continuity is present, the AC board is bad and requires replacement Refer to the appropriate furnace sequence of operation/wiring diagrams to get error code details	9
	Heat/Cool thermostats are commonly used with air conditioners and Dometic furnaces. The warranty, installation instructions, and diagnostic information are provided by the manufacturer of the thermostat, and not by Dometic.		
Blower Wheel			
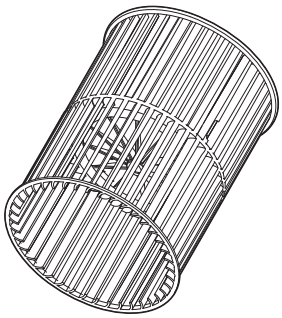	Inspect the blower wheel. Is the blower wheel dirty (dust, pet hair, etc.)?	Yes = Perform maintenance	41
	Inspect the blower wheel. Is there visible damage?	Yes = Replace the blower wheel	31
	Is the blower wheel turning?	No = Run tests on the motor	23
	Is the blower vibrating or noisy?	Yes = • Confirm that there are no loose objects (screws, etc.) within the wheel • Replace the blower wheel, if necessary	31

Component	Diagnostic Question	Action Based On Status	Page
	Burner Head		
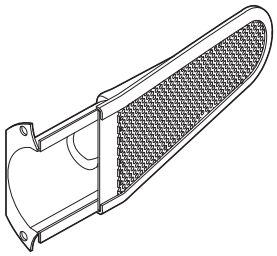	Inspect the burner head. Is there visible damage (rust, burnt through)?	Yes = Replace the burner head • Determine the cause of the rust and repair • Check for improper combustion, low gas pressure, or blockage. Repair	31
	Is excessive soot present?	Yes = • Confirm the burner head is correct for the model and/or BTU range of the furnace	--
		• Blockage in heating chamber or burner head. Perform maintenance	41
		• Check the exhaust tube to confirm it is the correct one for the furnace (AF models)	41
	Is there a problem with the furnace ignition?	Yes = Confirm the burner head is correct for the model and/or BTU range of the furnace	--
	Does the burner ignite when the blower is running?	No = • Replace the burner head	31
		• Burner head is obstructed. Perform maintenance	41
	Circuit Board		
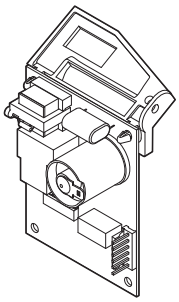	Are the system safety checks operating properly?	No = Troubleshoot the individual safety devices	--
	Inspect the board. Are there visible burns, brown streaks, melted elements?	Yes = Replace the circuit board	32
	Is there incoming power to the circuit board?	No = Check that the circuit breaker switch is in the on/reset position	33

Component	Diagnostic Question	Action Based On Status	Page
	Is there power at the thermostat terminal on the board?	No = • Confirm the thermostat is calling for heat • Confirm there is power at the thermostat and at the air conditioner control box	18
	Is there power going out to the fan motor?	No = Check the sail switch • If the sail switch is stuck in the closed position, replace the sail switch • If the sail switch is not stuck in the closed position, check the power at the thermostat terminal and the air flow terminal on the board. Replace the board if you have proper voltage at both terminals	38
	Is there power at the air flow terminal on the board?	No = Check for continuity • If the limit switch is stuck open, replace the limit switch • If the sail switch is stuck open, replace the sail switch	35 38
	Is there power to the gas valve from the circuit board within 15 seconds of power arriving at the airflow terminal?	No = Check the board. Replace if bad Check the electrode for a short. Replace if a short has occurred	32 34
	Does the burner ignite then turn off?	Yes = Verify that there are no cracks in the ceramic on the electrode, or any shorts in the high-tension lead to the electrode	34
	Does the burner ignite when the blower is running?	No= • Improper ground. Perform maintenance • Edge connector or circuit board is dirty. Perform maintenance	41
	Is there an error light on the control board?	Yes = Check the error codes for the appropriate furnace in the sequence of operation/wiring diagrams	9
	Is the gas valve opening but not getting a spark?	Yes = Remove the electrode wire from the ignitor. Hold the wire close to the ignitor, using a pair of insulated pliers. If it sparks, replace the electrode	34

Component	Diagnostic Question	Action Based On Status	Page
	Is the board getting wet on the AFM series furnace?	Yes = • Check the door installation. Replace the door if: – The flange is installed upside down – Screws are missing – The incorrect screws were used during installation – Wires are placed in-between the gasket and the door – The furnace casing is extended past the sidewall of the coach – Caulking exists around the weep holes	--
		• Relocate the board	32
	Circuit Breaker Switch		
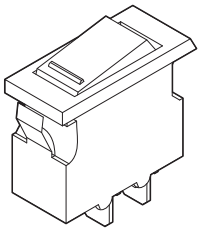	Is the switch a combination breaker and on/off switch? If so, is the switch on?	No = Turn the switch on	--
	Is the circuit breaker switch the correct amperage for the furnace?	No = Replace the circuit breaker switch	33
	Is the motor over amping?	Yes = Replace the fan motor after voltage is verified to be between 10.5–13.5 VDC	37
	Is there a voltage drop from the voltage coming into the switch, as opposed to what is coming out?	Yes = • Having volts but no amps is a source power issue from the coach	26
		• Replace the circuit breaker switch after confirming the cause is not a power issue	33
	Does the total square inches of return-air opening meet the minimum requirements?	Remove the furnace from the coach and run it on the bench. If the circuit breaker switch does not trip, the issue is not related to the furnace but to an installation issue	26
	Inspect the circuit breaker switch. Is there visible damage?	Yes = Replace the circuit breaker switch	33

Component	Diagnostic Question	Action Based On Status	Page
	Combustion Wheel		
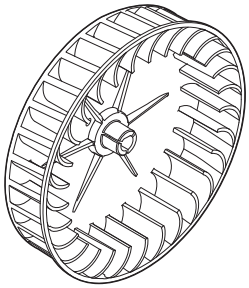	Inspect the combustion wheel. Is there visible damage?	Yes = Tighten or replace the combustion wheel	33
	Is the combustion wheel turning?	No = Run tests on the motor	23
	Does the burner ignite when the blower is running?	No = Troubleshoot the operational issue: Fan motor runs but no spark	4
	Is excessive soot present?	Yes = Troubleshoot the operational issue: Visible buildup of soot	5
	Does the burner ignite then turn off?	Yes = Troubleshoot the operational issue: Burner ignites then locks out	4
	Electrode		
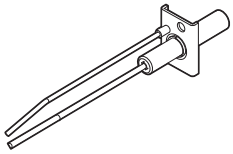	Inspect the electrode: • Is the electrode wire arcing anywhere other than the tip? • Is there visible damage? Is the ceramic on the electrode cracked?	Yes = Replace the electrode	34
	Is the correct electrode installed for the model of furnace?	No = Replace the electrode	34
	Is there a gap of 1/8″ between the ground wire and the electrode?	No = Adjust the electrode gap	34
	Does the burner ignite when the blower is running?	No = Troubleshoot the operational issue: Fan motor runs but no spark	4
	Does the burner ignite then turn off?	Yes = Troubleshoot the operational issue: Burner ignites then locks out	4
	Limit Switch		
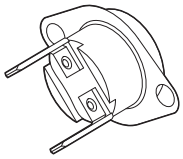	• Is there continuity across the terminals at room temperature? • Does the limit switch have the correct temperature rating?	No = Replace the limit switch	35
	Inspect the limit switch. Is there visible damage?	Yes = Replace the limit switch	35
	Does the burner ignite when the blower is running?	No = Troubleshoot the operational issue: Fan motor runs but no spark	4
	Is the furnace limiting?	Yes = Troubleshoot the operational issue: Furnace is limiting	4

Component	Diagnostic Question	Action Based On Status	Page
	Motor		
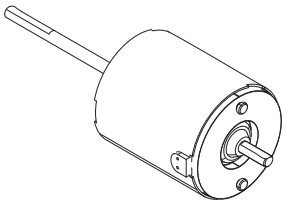	Is there power going to the motor?	No =	
		• Check the sail switch	24
		• Check the circuit board operation	19
		Yes = Verify that there is a minimum of 10.5 VDC going to the motor, using a separate power source (you can have voltage without amperage). If the voltage is within range, but still does not operate, replace the motor	37
	Is the motor running too slow or too fast?	Yes = Verify the voltage is between 10.5–13.5 VDC, using a separate power source for the motor	
		• If in range, check the amp draw	36
		• If not in range, it is a source power issue from the coach	--
	Is the furnace experiencing ignition/combustion issues?	Yes = Check the amp draw	36
	Is the combustion wheel operating?	No = Replace the motor	37
	Is the motor shaft damaged?	Yes = Replace the motor	37
	Is the blower wheel operating?	No = Troubleshoot the operational issue: Motor does not run	4
	Is excessive soot present?	Yes = Troubleshoot the operational issue: Visible buildup of soot	5
	Is the motor vibrating or noisy?	Yes = Tighten the motor mount	36
	Does the burner ignite when the blower is running?	No = Troubleshoot the operational issue: Fan motor runs but no spark	4
	Relay (Only used on furnaces built prior to 07/2001)		
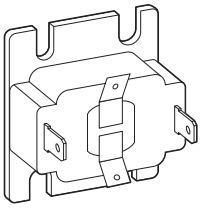	• Is there power to the relay, but the motor does not receive power from the relay and the sail switch is not stuck closed? • Is the board not distributing power, or is the relay staying open during normal furnace operation? • Inspect the relay. Is there visible damage? • Is the fan continuously running when the thermostat is off? • Is the fan not turning on when the thermostat calls for heat? • Does the blower shut off at the same time the burner shuts off?	Yes = Replace the external relay	37

Component	Diagnostic Question	Action Based On Status	Page
	Sail Switch		
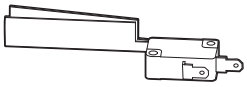	Inspect the sail switch. Is the paddle bent or out of alignment? Is there visible damage?	Yes = Replace the sail switch	38
	• Is there continuity in the switch when the paddle is depressed? • Is the correct sail switch installed for the model of furnace? • Does the motor run when the sail switch is bypassed?	No = Replace the sail switch	38
	Does the fan run for approximately 15 seconds, then shut down without an ignition attempt?	Yes = The sail switch is stuck open. • Check for continuity across the two terminals when the fan is running. If none exists, replace the switch • Verify at least 10.5 VDC is reaching the motor. If not, troubleshoot the motor	38 23
	Does the fan fail to run when the thermostat calls for heat?	Yes = The sail switch is stuck closed. Check for continuity across the two terminals. If continuity exists when the fan is not running, replace the switch	38
	Is the sail switch fluttering? Is the burner repeatedly lighting then extinguishing?	Yes = Bypass the sail switch. If the furnace remains running, replace the sail switch	38
	Is a rubbing noise heard when the fan is starting up and slowing down?	Yes = Remove the sail switch. Confirm the noise is originating from the switch. If so, replace the sail switch	38
	Is there an obstruction between the paddle and the switch contact?	Yes = Perform maintenance	41

Component	Diagnostic Question	Action Based On Status	Page
	Solenoid/Gas Valve		
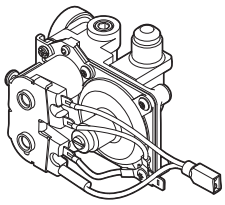	Inspect the valve. Is there visible damage?	Yes = Replace the solenoid/gas valve	40
	Is excessive soot present in the combustion chamber?	Yes = • Check the gas pressure • Check the burner alignment • Confirm the correct exhaust tube is installed (for AF furnaces only) • Replace the solenoid/gas valve • Confirm the correct orifice is installed • Clean the orifice	 26 -- -- 40 41
	Depending on the furnace model, when you perform an Ohms test See Testing the Ohms (on page 39): • Older models: Is the resistance on the solenoid coil between 30 Ohms–50 Ohms on each coil when they are isolated? • Newer models: Is the resistance on the solenoid coil between 15 Ohms–25 Ohms when the coils are not isolated (checking the valves in parallel)?	No = Replace the solenoid/gas valve	40
	Is the valve receiving a minimum of 9 VDC ?	No = This is a source power issue from the coach	--
	When the gas valve is closed, can you smell gas?	Yes = Replace the solenoid/gas valve	40
	Does the burner ignite when the blower is running?	No = Troubleshoot the operational issue: Fan motor runs but no spark	4
	Is the furnace repeatedly cycling on and off?	Yes = • Bypass the sail switch • Adjust the gas supply line	 38 39

>> Return to Operational Issues and Diagnostics

6 HEATING ISSUES

A furnace is a vital part of any heating system, but it is only one part. A majority of furnace problems are caused by issues outside the product itself. When diagnosing/troubleshooting a furnace problem, always check the following items before replacing components, as the problem may stem from one of these heating issues and not the furnace:

6.1 Identifying Heating Issues

Operational Issue	Potential System Issue	Page
• Visible buildup of soot • Burner ignites, then locks out • Furnace over-fires or under-fires	Gas Pressure	26
• Motor vibrates or is noisy • Furnace is limiting	Ducting	27
• Motor runs, but no spark • Furnace is limiting	Return Air	28
• Motor runs, but no spark • Fan runs too fast	Voltage	29

Check the Gas Pressure

➤ Check that the gas pressure is set at a minimum of 11" W.C.(at the furnace), with a minimum of 50% (ideally 100%) of other gas-fired appliances operating while the furnace is in operation. The pressure should be tested using a U-tube manometer. If using a digital-type manometer, calibrate it often with a U-tube manometer.

➤ Check the outside air temperature. As the air gets colder, it reduces the BTU capacity of liquid propane (LP). The gas pressure is affected by a combination of the fill level of the LP tanks, the ambient temperature outside, and the number of BTUs the furnace requires. Use the following example chart to understand the impact of these three factors on whether there is enough gas pressure to sustain ignition in the furnace:

20 lb. Bottle (*30 lb. bottle: multiply x 1.40) for 40,000 BTU Furnace						
Tank fill-level		**20 °F**	**0 °F**	**-5 °F**	**-10 °F**	**-15 °F**
60%	Tank Capacity	36,000	18,000	12,750	8,500	4,250
50%		32,400	16,200	12,150	8,100	4,050
40%		28,800	14,400	11,400	7,600	3,800
30%		25,200	12,600	10,450	7,300	3,150
20%		21,600	10,800	8,100	5,400	2,700
10%		16,200	8,100	6,075	4,050	2,025
65 lb. Bottle under Mtd. for 40,000 BTU Furnace						
Tank fill-level		**20 °F**	**0 °F**	**-5 °F**	**-10 °F**	**-15 °F**
60%	Tank Capacity	95,600	47,800	36,000	23,900	12,100
50%		86,000	43,000	32,250	21,500	11,750
40%		77,000	38,500	29,250	19,250	9,625
30%		68,000	34,000	25,500	17,000	8,500
20%		58,000	29,000	21,750	14,500	7,250
10%		43,200	21,600	16,200	10,800	5,400

Example: 40,000 BTU furnace, 65 lb. LP bottle, 40% full, 0 °F outside: tank capacity is 38,500 BTUs.

To raise the tank temperature and increase the BTU capacity of the tank:

➤ Place an insulated, fire-resistant blanket over the tanks.

➤ Place an illuminated 75-watt light bulb under the blanket.

➤ The temperature of the bottle should rise 10°–20° F over a brief period of time, which could double the BTU capacity of the tank from the preheating state.

Check the Ducting

Each furnace has a specific BTU size that requires a minimum number of square inches of heat ducting to support the airflow. The standard soft-ducting size is 4" (12 sq. in.), which helps identify the minimum number of ducts needed for any model of furnace, based on the minimum ducting for the BTU size. For example, if a furnace has a requirement of 24 sq. in. minimum ducting, then a minimum of two ducts must be used.

➤ Determine the type of duct system:

- Soft duct: routed throughout cabinets or set below flooring
- Hard duct: built within flooring

➤ Use a mirror and a flashlight to inspect the duct system and identify potential issues:

Type of Duct System	Potential Issue
Soft-Duct System	• Ducts do not meet the minimum requirements, including the minimum number of ducts, as outlined in the installation instructions • There are too many loose bends/elbows • Ducts are smashed or kinked • Ducts are torn or poorly connected
Hard-Duct System	• Ducts do not meet the minimum size requirements as outlined in the installation instructions • Ducts are collapsed, have holes, or exhibit other damage • The furnace is not lined up with the designated opening in the floor

➤ Check for proper duct connections at the furnace and heat registers.

- The duct runs must be straight and taut. Excess ducting slows the airflow through the duct.
- The heat ducts must be clean and free of obstructions.

Identify the Duct Locations

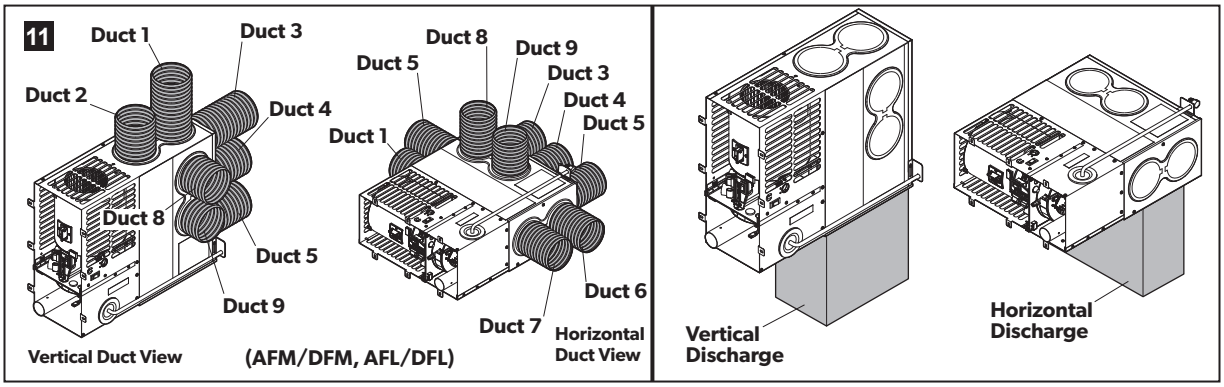

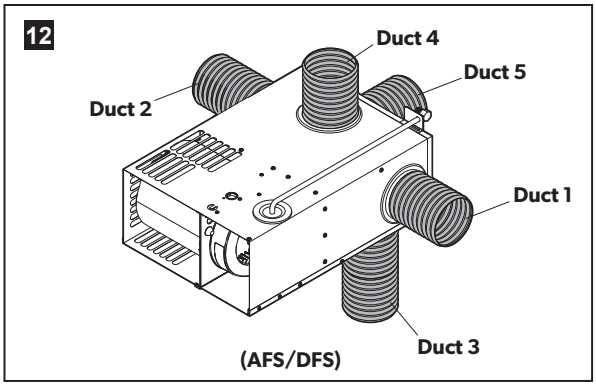

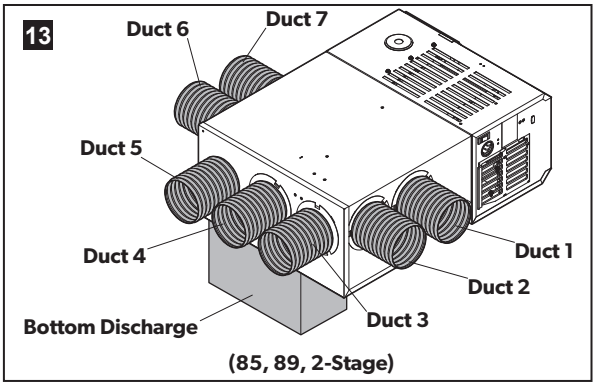

For additional ducting requirements or specific air-discharge information, consult the installation instructions for the furnace.

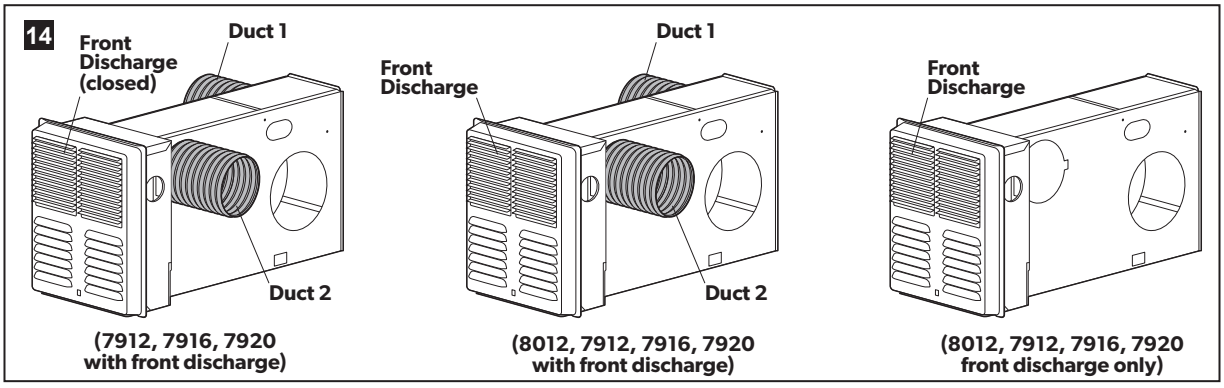

Check the Return Air

Similar to the ducting requirements for the furnace, a minimum number of square inches is also required for the return airflow. To determine if the return air passageways are contributing to, or causing an operational issue for the furnace, perform the following checks:

- Make sure the air passageways are clean and free of obstructions.
- Remove any air filters in the passageway.
- Confirm the return air passageway meets the minimum square inches required for the furnace.

Minimum return air passageway sizes

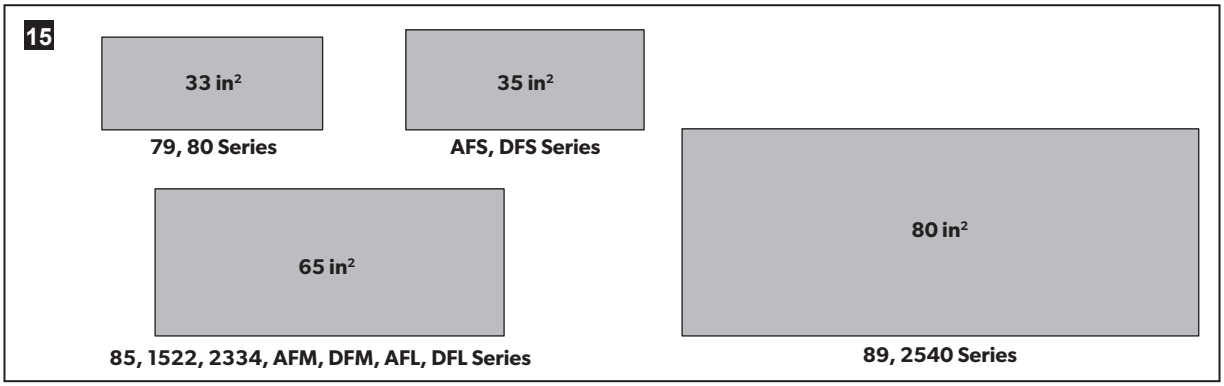

For additional return air passageway requirements, consult the installation instructions for the furnace.

Check the Voltage

If the furnace is experiencing a source issue from the power supply of the coach, the fix is not related to the furnace and could be the result of a converter issue.

- Use a digital or analog multimeter to take voltage readings.
- Confirm the voltage to the furnace is between 10.5 and 13.5 VDC during operation, testing with the interior lights both ON and OFF.

This check should be made using the battery, converter, or generator, where applicable. Do not use a test light, as it does not provide enough useful information for a proper diagnosis.

>> Return to Operational Issues and Diagnostics

7 SERVICE PROCEDURES

⚠WARNING Failure to obey these warnings could result in death or serious injury

- SERVICE HAZARD. Installation, repairs and preventative maintenance should be done by a qualified service person only. :
- ELECTRICAL SHOCK, FIRE, EXPLOSION, AND/OR CARBON MONOXIDE HAZARD. Use only Dometic replacement parts and components, which are specifically approved for use with the Furnace.

Images in this section are general depictions of a furnace and are informational only. Actual model setup may vary. To see furnace component locations by model, refer to Component locations (on page 8). For specific furnace information outside of what is presented in this manual, refer to the installation manual for the furnace.

7.1 Accessing the furnace components

⚠WARNING ELECTRICAL SHOCK, FIRE, EXPLOSION, AND/OR CARBON MONOXIDE HAZARD. Use only Dometic replacement parts and components, which are specifically approved for use with the Furnace. Failure to obey this warning could result in death or serious injury.

Perform the steps in this section prior to proceeding with any service procedure.

Access a Door Model Furnace

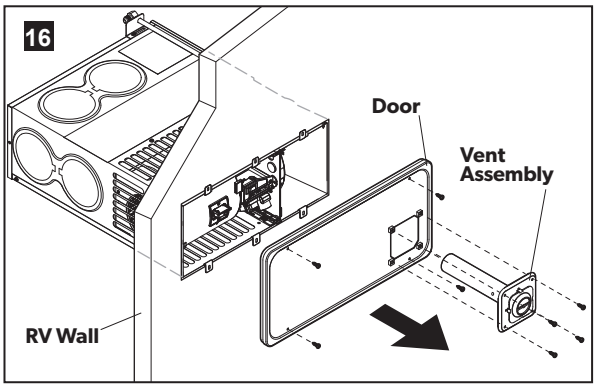

- ➤ Remove the four screws securing the vent assembly.
- ➤ Slide the vent assembly out and away from the door.
- ➤ Remove the four screws securing the door. Lift off the door. (Place the door in a safe location while servicing the furnace.)

Access a Less Door Model Furnace

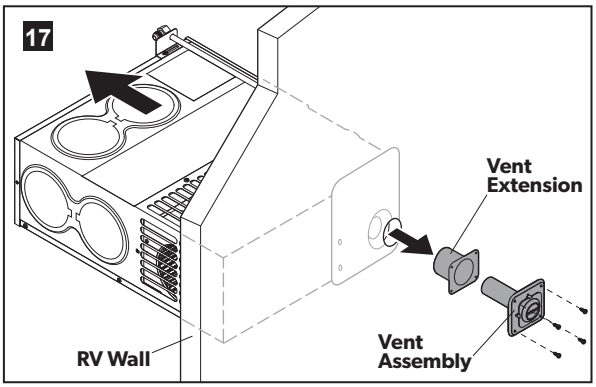

- ➤ There is no door on the outside of the RV, with a less door model. To access the furnace components:
  - – Remove the four screws securing the vent assembly, then slide the vent assembly out and away from the RV.
  - – Use the service access area located directly in front of the furnace on the inside of the RV.

7.2 Servicing the blower wheel

Perform the steps in Accessing the furnace components (on page 30) before proceeding with service.

Replace the Blower Wheel

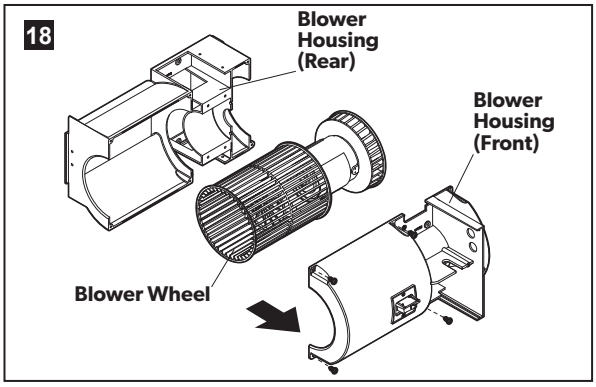

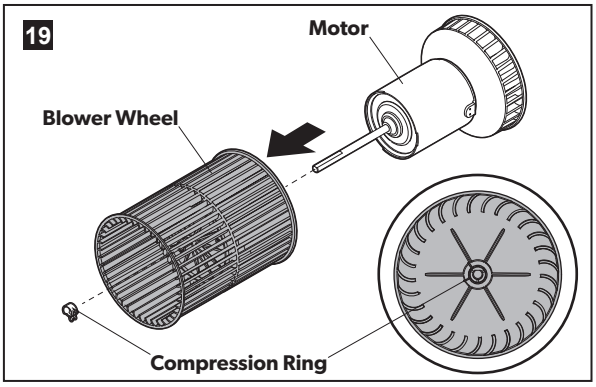

- Remove the top screws on the blower housing.
- Remove the bottom screws on the blower housing.
- Gently pull the front blower housing forward to expose the blower wheel.
- Remove the compression ring holding the blower wheel to the motor.
- Slide the existing wheel off of the motor shaft and slide the new wheel into place. Replace the ring.
- Reverse the steps for re-installation.

7.3 Servicing the burner head

Perform the steps in Accessing the furnace components (on page 30) before proceeding with service.

Replace the Burner Head

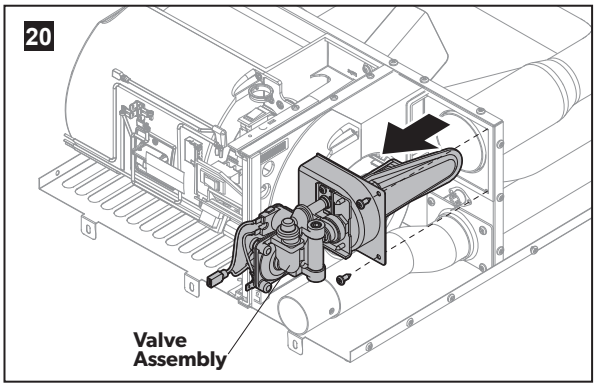

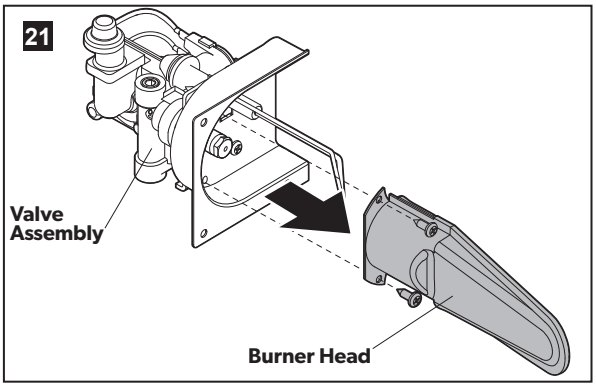

- Remove the screws securing the burner and valve assembly to the furnace.
- Disconnect the gas line to the gas valve.
- Remove the grommet and pull the electrode lead through the hole in the furnace wall.
- Gently pull the burner and valve assembly out of the furnace.
- Remove the screws holding the burner and valve together.
- Slide the existing burner away from the gas valve and replace with a new burner.
- Reverse the steps for re-installation.

The burner head, electrode, and gas valve on the late model 79 series furnaces are individually accessible. However, to service these same components on the late model 85 and 89 series, remove the complete assembly.

7.4 Servicing the circuit board

Perform the steps in Accessing the furnace components (on page 30) before proceeding with service.

Relocate the Circuit Board

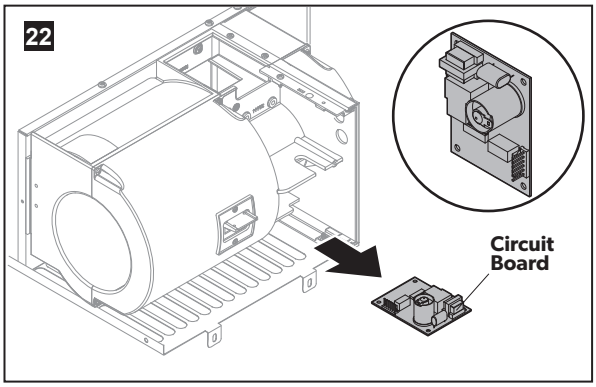

In furnaces built prior to June 2016, the circuit board lays on the bottom of the furnace housing. The board relocation kit (#32596) is required when replacing the circuit board.

- Slide the circuit board out of the furnace.
- Disconnect the wires to the existing circuit board. Refer to the Sequence of operation/wiring diagrams (on page 9) for specific wiring information.
- Reverse the steps in the next section,"Replace the circuit board" to complete the installation.

Replace the Circuit Board

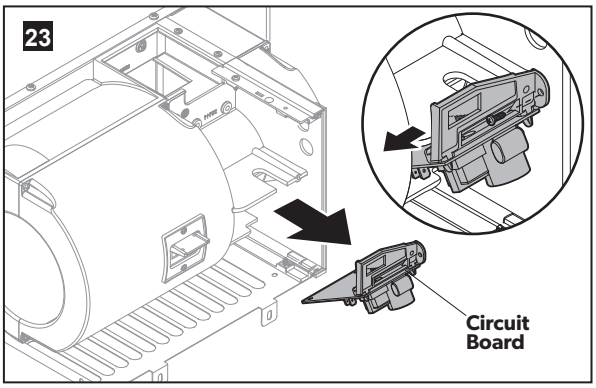

- Remove the screws holding the plastic bracket to the furnace wall.
- Slide the bracket out of the furnace and pop the bracket off of the circuit board.
- Disconnect the wires to the existing circuit board. Refer to the Sequence of operation/wiring diagrams (on page 9) for specific wiring information.
- Reconnect the wires to the new circuit board.
- Feed the circuit breaker switch wires through the rectangular hole on the new DSI bracket.
- Connect the wires to the breaker switch and push the switch into the new plastic bracket.
- Reverse the steps for re-installation. Make sure all the wires are in the notch and not pinched between the bracket and the housing.

7.5 Servicing the circuit breaker switch

Perform the steps in Accessing the furnace components (on page 30) before proceeding with service.

Reset the Circuit Breaker Switch

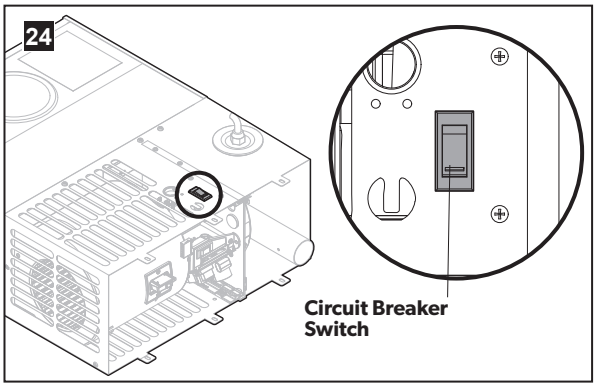

- To reset the circuit breaker switch, flip the switch to the opposite position setting, then return it to the original position.

Flip the switch repeatedly between the ON and OFF positions when testing the furnace.

Replace the Circuit Breaker Switch

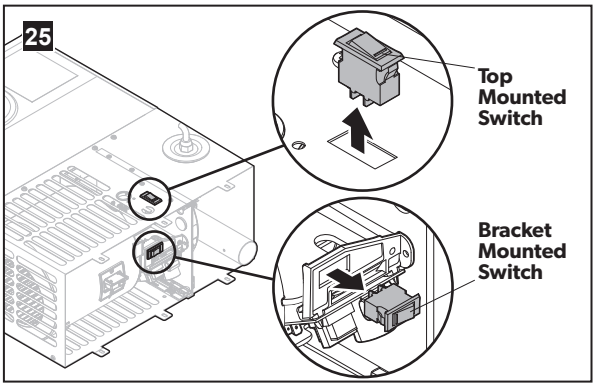

- Remove the two power-on wires from the switch.
- Remove the two power-off wires from the switch.
- Pull the existing switch up and out of the furnace.
- Confirm the new switch is the same style as the previous switch, and is the appropriate amperage for the furnace.
- Reverse the steps for re-installation.

7.6 Servicing the combustion wheel

Perform the steps in Accessing the furnace components (on page 30) before proceeding with service.

Tighten or Replace the Combustion Wheel

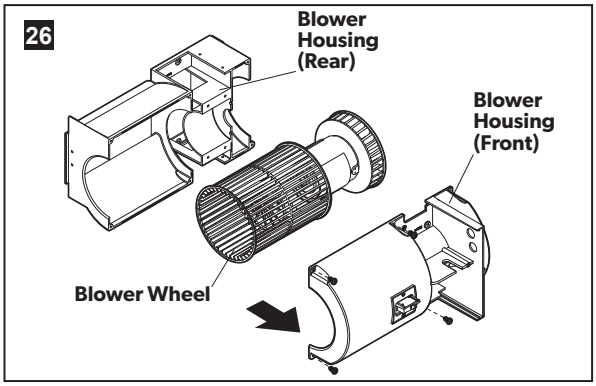

- Remove the top screws on the blower housing.
- Remove the bottom screws on the blower housing.
- Gently pull the front blower housing forward to expose the combustion wheel.

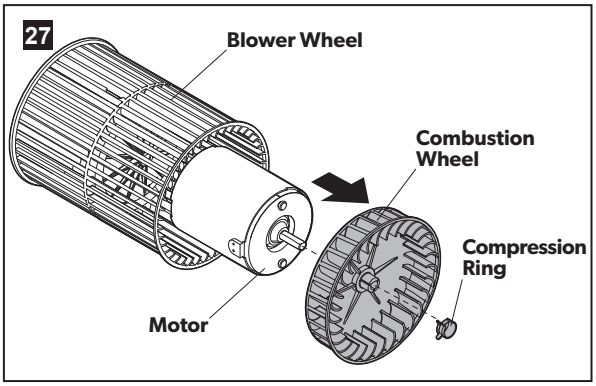

- Remove the compression ring holding the combustion wheel to the motor.
- Slide the existing compression wheel off of the motor shaft and slide the new combustion wheel onto the shaft.
- Replace the compression ring to secure the new combustion wheel in place.
- Reverse the steps for re-installation.

7.7 Servicing the electrode

The burner head, electrode, and gas valve on the late model 79 series furnaces are individually accessible. However, to service these same components on the late model 85 and 89 series, remove the complete assembly.

Perform the steps in Accessing the furnace components (on page 30) before proceeding with service.

Replace the Electrode

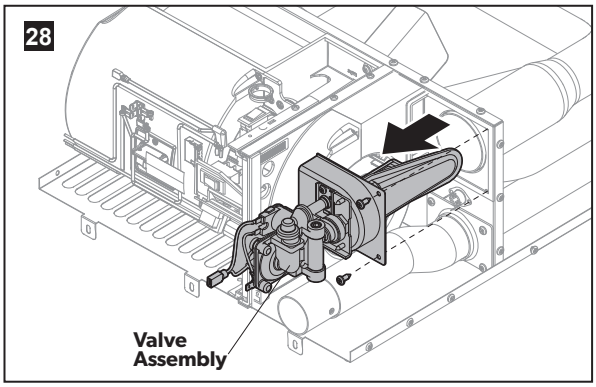

- Remove the screws securing the burner and gas valve assembly to the furnace.
- Disconnect the gas line to the gas valve.
- Remove the grommet and pull the electrode lead through the hole in the furnace wall.
- Gently pull the burner and valve assembly out of the furnace.

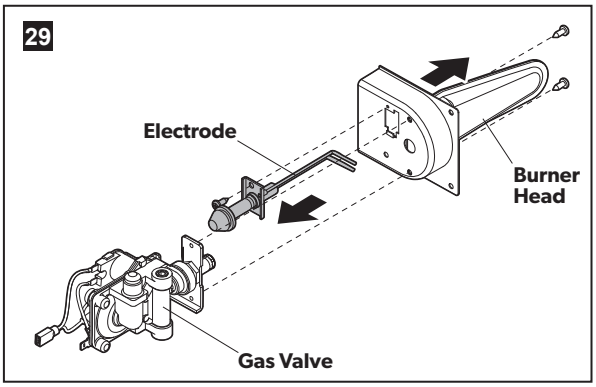

- Remove the screws holding the burner and gas valve together.
- Replace the existing electrode.
- Reverse the steps for re-installation.

Adjust the Electrode Gap

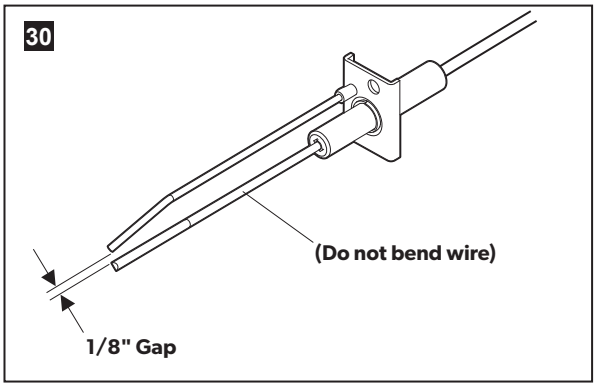

- Follow the steps for replacing the electrode outlined in the section above (Replace the electrode) until the burner and gas valve have been separated.
- Using a feeler gauge, confirm the electrode has a 1/8" gap from the center of the electrode to the center of the ground wire.
- Adjust the gap, as necessary, by gently bending the bare wire only.

Do not bend the wire with the white porcelain insulator. The insulator may crack causing spark failure.

7.8 Servicing the limit switch

Perform the steps in Accessing the furnace components (on page 30) before proceeding with service.

Replace the Limit Switch

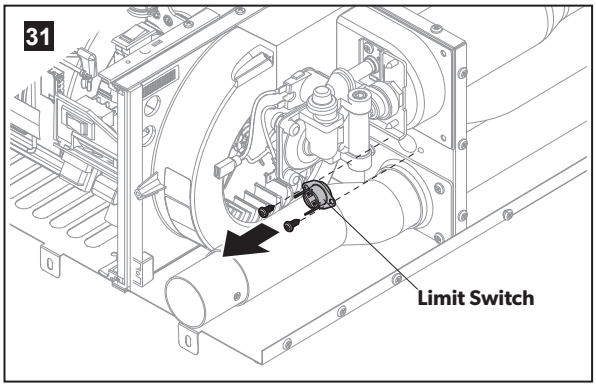

- Remove the two blue wires connecting the circuit board to the limit switch.
- Remove the screws holding the limit switch in place.
- Remove the existing limit switch and replace with an appropriate temperature-rated switch.

To confirm the temperature rating, look at the base of the limit switch and match the setting.

- Reverse the steps for re-installation.

On the 89-II furnaces with a limit switch that has the part number 36205, the switch requires an operator to reset the switch. The switch is located above the chamber. Push the button in to reset the switch.

7.9 Servicing the motor

Perform the steps in Accessing the furnace components (on page 30) before proceeding with service.

Tighten the Motor Mount

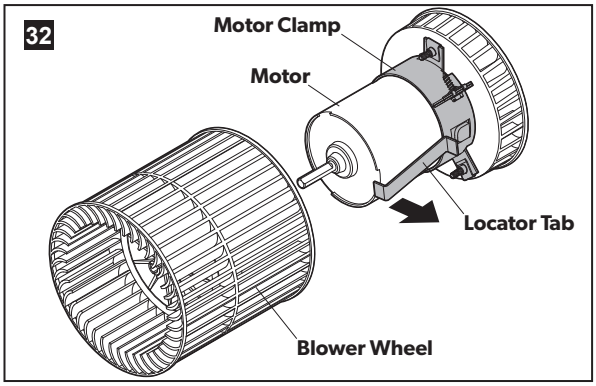

- ➤ Follow the procedure to Replace the Blower Wheel until the motor is visible.
- ➤ Tighten the screw on the motor clamp. Newer models do not have a motor clamp in the motor repair kit. Motors are designed with wires.
- ➤ Reverse the steps to reassemble the housing.

Check the Amp Draw

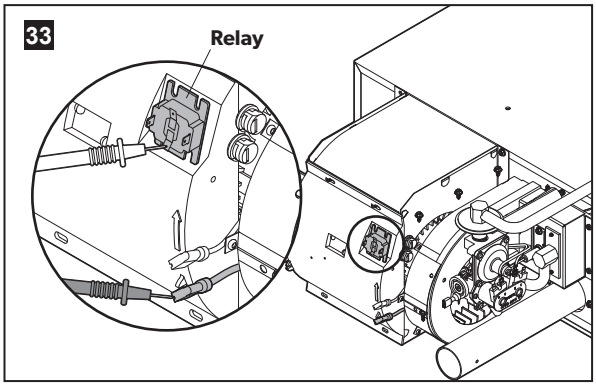

For models with an external relay:

- ➤ To measure the DC amperage of the motor, perform one of the following tasks:
  - Confirm the voltage is between 10 and 13.5 VDC.
  - Place an (DC) amp clamp around the motor wire as the motor is running.
  - Perform an in-line test:
    - Disconnect the motor wire off of the relay.
    - Connect the motor wire to one meter lead then touch the other meter lead to the relay to start the motor.

The motor must be running to get an amp draw reading.

- Read the amps.

Some multi-meters will not start the motor. In this circumstance, an amp draw reading will not be possible.

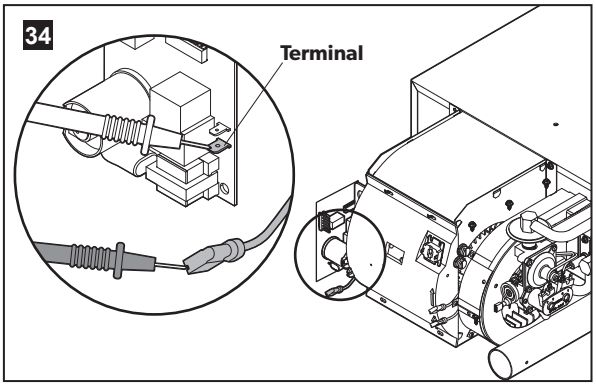

For all other models:

- ➤ To measure the DC amperage of the motor, perform one of the following tasks:
  - Confirm the voltage is between 10 and 13.5 VDC.
  - Place an (DC) amp clamp around the motor wire as the motor is running.
  - Perform an in-line test:
    - Disconnect the motor wire off of the motor terminal on the circuit board.
    - Connect the motor wire to one meter lead then touch the other meter lead to the motor terminal on the board to start the motor.

The motor must be running to get an amp draw reading.

- Read the amps.

Some multi-meters will not start the motor. In this circumstance, an amp draw reading will not be possible.

Replace the Motor

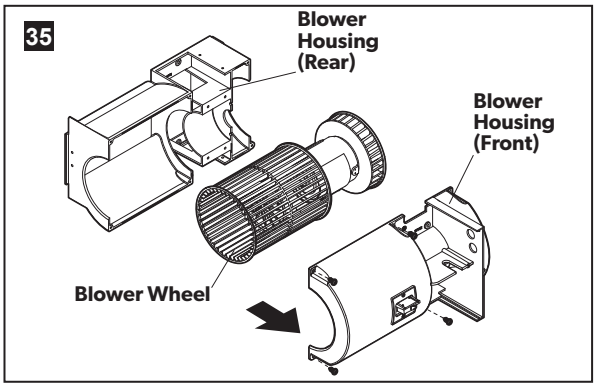

- Remove the top screws on the blower housing.
- Remove the bottom screws on the blower housing.
- Gently pull the front blower housing forward to expose the blower wheel.

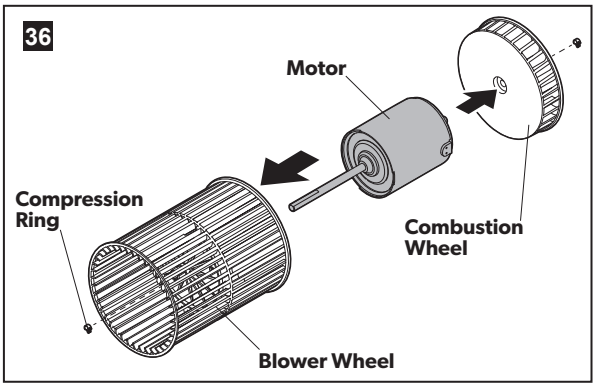

- Remove the compression ring holding the blower wheel to the motor.
- Slide the existing wheel off of the motor shaft.
- Remove the compression ring holding the combustion wheel to the motor.
- Slide the existing compression wheel off of the motor shaft.
- Remove the wires from the motor.
- Remove the existing motor. Replace with a new motor.
- Reverse the steps for re-installation.

7.10 Servicing the relay

Perform the steps in Accessing the furnace components (on page 30) before proceeding with service.

Replace the External Relay

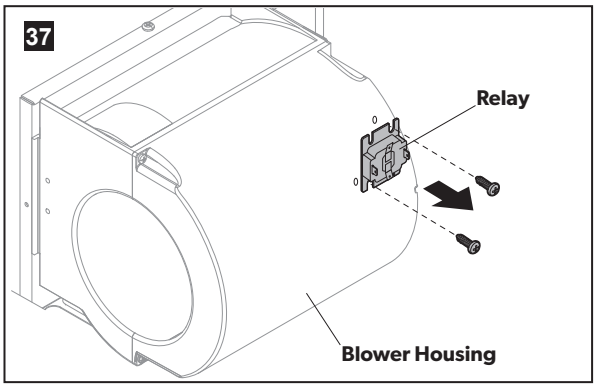

The external relay is used in older furnaces and is located on the blower housing.

- Remove the screws holding the relay to the blower housing.
- Disconnect the four wires connected to the relay:
  - Power in from the circuit breaker switch
  - The ground
  - Power to the motor
  - Power in from the thermostat
- Lift the relay away from the housing and replace it.
- Reverse the steps for re-installation.

7.11 Servicing the sail switch

Perform the steps in Accessing the furnace components (on page 30) before proceeding with service.

Bypass the Sail Switch

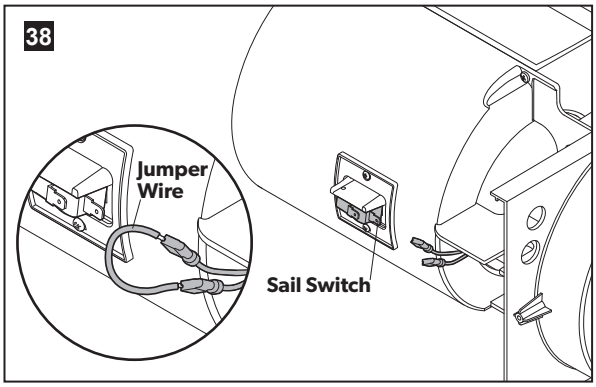

- Disconnect the two wires from the sail switch.
- Initiate a furnace start.
- Wait for the fan to start.
- As soon as the fan starts, connect (jump) a wire across the two disconnected wires to simulate a closed switch.

You must wait for the fan to start before jumping the sail switch.

Replace the Sail Switch

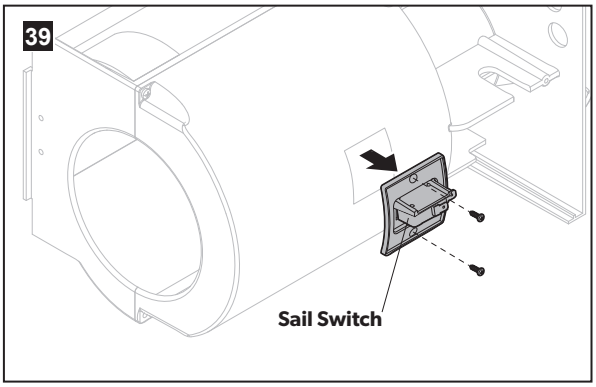

- Locate the sail switch:
  - Older models: behind the blower.
  - Atwood models: on the fresh-air side of the motor.
  - Newer models: on the blower side of the motor.
- Remove the two wires connecting the circuit board to the sail switch.
- Remove the screws holding the sail switch bracket in place.
- Remove the bracket and sail switch.
- Replace with a current series switch. Do not use a larger switch or motor and ignition issues will occur.
- Reverse the steps for re-installation.

7.12 Servicing the gas valve

The burner head, electrode, and gas valve on the late model 79 series furnaces are individually accessible. To service these same components on the late model 85 and 89 series, remove the complete assembly.

Perform the steps in Accessing the furnace components (on page 30) before proceeding with service.

Testing the Ohms

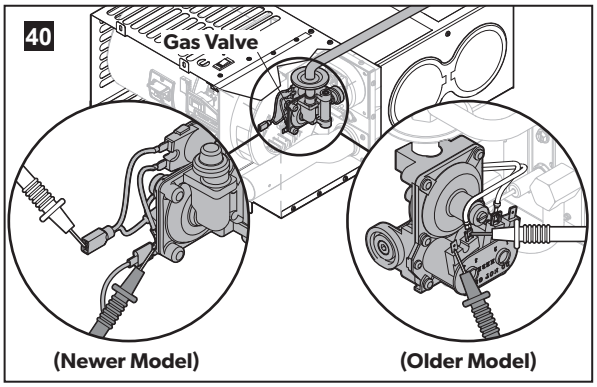

Older Models

- Using a Volt-Ohm Meter, measure the resistance on the solenoid coil:
  - Make sure the coils are isolated and disconnected from the power and ground sources.
  - Place one meter lead on each coil terminal on one of the solenoids.
  - Confirm the resistance is between 30 Ohms and 50 Ohms.
  - Repeat the steps for the second solenoid.

Newer Models

- Using a Volt-Ohm Meter, measure the resistance on the solenoid coil:
  - Disconnect the positive terminal from the power source.
  - Disconnect the negative terminal from the ground source.
  - Make sure the coils are not isolated.
  - Place one meter lead on the positive terminal.
  - Place one lead on the negative terminal.
  - Confirm the resistance is between 15 Ohms and 25 Ohms.

Adjust the Gas Supply Line

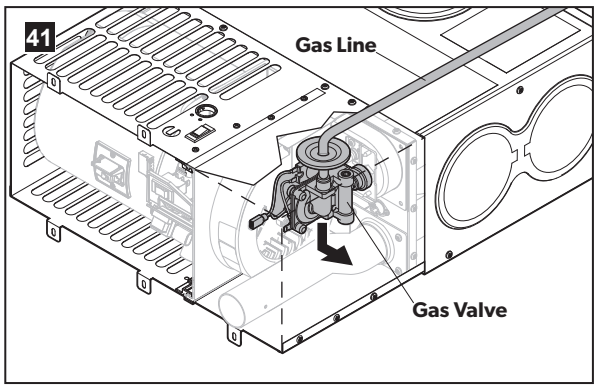

Adjustment of the gas supply line is a solution when the furnace lights and goes out repeatedly, but does not enter lockout. It can also occur during a pre-delivery inspection (PDI) or the first time the unit is used in colder weather. Mainly, this solution is necessary for the AF Series furnaces.

- Locate the gas supply line for the furnace.
- When the furnace ignites, gently apply pressure to the supply line to move it down and to the right in very small increments.
- Continue to adjust the supply line until the furnace remains lit after ignition.

Replace the Solenoid/Gas Valve

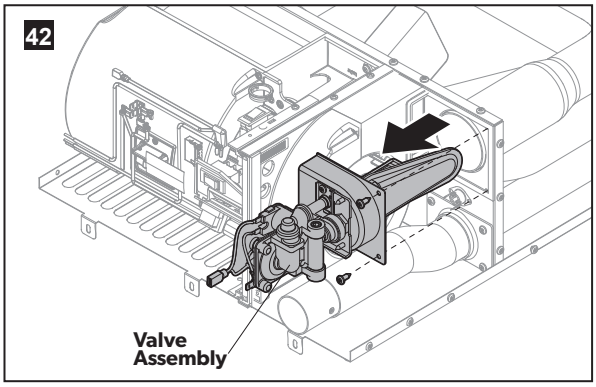

- Remove the screws securing the burner and gas valve assembly to the furnace.
- Disconnect the gas line to the gas valve.
- Remove the grommet and pull the electrode lead through the hole in the furnace wall.
- Gently pull the burner and valve assembly out of the furnace.

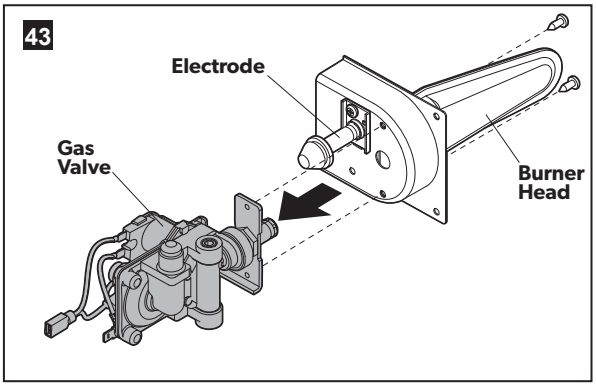

- Remove the screws holding the burner and gas valve together.
- Remove the wire connecting the electrode to the gas valve.
- Replace the existing gas valve.
- Reverse the steps for re-installation.

Replace the Orifice

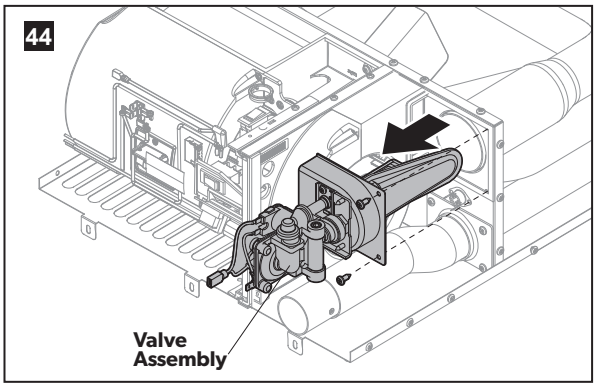

- Remove the screws securing the burner and gas valve assembly to the furnace.
- Disconnect the gas line to the gas valve.
- Remove the grommet and pull the electrode lead through the hole in the furnace wall.
- Gently pull the burner and valve assembly out of the furnace.

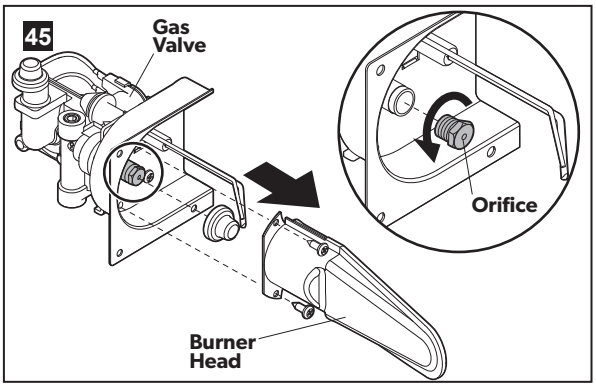

- Remove the screws holding the burner and gas valve together.
- Unscrew the existing orifice.
- Verify the new orifice is the correct size.
- Reverse the steps for re-installation.

>> Return to Operational Issues and Diagnostics

8 MAINTENANCE

⚠ WARNING Failure to obey these warnings could result in death or serious injury

- SERVICE HAZARD.
  - Installation, repairs and preventative maintenance should be done by a qualified service person only.
  - The furnace should be inspected before use and at least annually, by a qualified service person only.
- ELECTRICAL SHOCK, FIRE, EXPLOSION, AND/OR CARBON MONOXIDE HAZARD. Use only Dometic replacement parts and components, which are specifically approved for use with the Furnace.

8.1 Technician's Periodic Maintenance Schedule

The following preventive maintenance and safety checks should be performed once a year, or as needed, depending on the use of the furnace. Failure to properly maintain the furnace may void the furnace warranty and could result in unsafe furnace operation. Preventive maintenance is not covered under the furnace warranty.

Burner

The burner head requires no adjustment.

➤ Clean the burner head with a wire brush to remove debris and corrosion.

➤ Inspect the screen area for distortion or large holes.

➤ Replace the burner, if necessary. Refer to Servicing the burner head (on page 31).

Blower Wheel

➤ Inspect the wheel to make sure it is clean and free from obstructions.

➤ Replace the wheel if it is damaged. Refer to Servicing the burner head (on page 31).

Combustion Chamber

➤ Inspect the air intake and flue for internal debris or obstructions, such as wasp or bird nests.

➤ Remove any foreign material.

➤ Clean the combustion chamber by removing the unit and flushing it with water.

➤ Inspect the chamber for cracks and holes. Replace the unit if any cracks or holes are visible.

➤ Refer to Servicing the combustion wheel (on page 33).

Combustion Wheel

➤ Inspect the wheel to make sure it is clean and free from obstructions.

➤ Replace the wheel if it is damaged. Refer to Servicing the combustion wheel (on page 33).

Circuit Board

➤ Check the circuit board wiring. Refer to Sequence of operation/wiring diagrams (on page 9)

➤ Check the ground connections:
  - Pull your ground, strip the ground, then reattach the ground to the circuit board.
  - Refer to Servicing the circuit board (on page 32).

Control Compartment

➤ Clean the control compartment, removing any dirt or lint.

Ducts

➤ Confirm the heat ducts are clean and clear of obstructions. Clean the ducts as necessary.

➤ Check for proper duct connection. Any ducts disconnected from the furnace or outlets must be reattached.

➤ Check that there are not rugs or other obstructions covering the registers.

➤ Check the registers. If closeable registers have been used, confirm the ducts system meets minimum ducting requirements (refer to installation manual for specific model of furnace).

➤ Replace any damaged ducts. Replacement ducts must be rated for a minimum of 200 °F.

➤ Refer to Heating Issues (on page 26).

Gas Pressure

Improper gas pressure can cause the furnace to work inconsistently and create unbalanced combustion, resulting in sooting or premature failure of the heat chamber. The gas pressure must be 11 in. W.C. (water column) or 27 mbar.

➤ To test the gas pressure:
  - Turn on the furnace and a minimum of 50% of the gas appliances.
  - Use the U-tube manometer to measure the gas pressure.

➤ Refer to Heating Issues (on page 26).

Gas Supply System

➤ Perform a pressure-drop test according to current ANSI standards, to ensure there are no gas leaks.

Gas Valve

➤ Clean the orifice.

The orifice must be removed before cleaning.

- Refer to Servicing the gas valve (on page 39) for the details on reaching the orifice.
- Soak the orifice in carburetor cleaner or an alcohol-based solvent.
- Use a toothpick or other non-metal instrument to clear any debris from the orifice.

Gaskets

➤ Inspect all gaskets for tight seals.

➤ Replace any damaged or loose gaskets; never reuse gaskets.

Support

➤ Ensure that the furnace's physical support structure is solid, with no signs of sagging, cracks, or gaps.

Motor

The motor is lubricated and permanently sealed. It requires no oiling, and no internal parts can be repaired.

➤ Replace the motor if it fails or is defective, emitting abnormal noises, etc.

➤ Refer to Servicing the motor (on page 36)

Return Air

➤ Clean and clear the return air passageways of any obstructions.

➤ Ensure that the passages meet the minimum square inches for the unit, as specified in the installation instructions.

➤ Clear away any combustibles or other items that are stored around or near the furnace.

➤ Refer to Heating Issues (on page 26).

Sail Switch

➤ Clear obstructions around the sail switch.

➤ Make sure the paddle closes and/or is not stuck closed.

➤ Clean any wire connections or connectors attached to the switch using contact cleaner.

➤ Refer to Servicing the sail switch (on page 38).

Venting

➤ Inspect the vent for any debris or obstructions, and clean if necessary.

➤ Check the draft cap assembly for proper overlap. The vent tube should be inserted into the combustion tube a minimum of 1-1/4" (32 mm). The draft cap assembly must be positioned against the door screen for proper function (85/89 models only).

➤ Any air leakage at vent joints may cause improper combustion.

➤ Clean the exhaust tube.

Voltage

➤ Use the multimeter to check the voltage coming into the unit. The voltage must be between 10.5 and 13.5 VDC during operation. Check the voltage at the generator, battery, and converter to ensure it is within specifications.

➤ Low voltage can cause the furnace to overheat and cycle. Clean the circuit board ground connections using a non-metal instrument and carburetor cleaner, as necessary.

➤ High voltage can cause unbalanced combustion, and excessive motor wear. Replace the motor when it is worn.

➤ Refer to Heating Issues (on page 26).

To increase motor life, the furnace should be wired directly through the battery.

Wire Connections

➤ Check the furnace for loose or disconnected wires.

➤ Reattach or tighten connections as necessary.

➤ Check for improper grounding or dirty edge connectors.

➤ Clean the circuit board ground connections using a non-metal instrument and carburetor cleaner.

Ventilator Board

➤ Check the ventilator board wiring for loose or disconnected wires.

➤ Make sure the three connectors and harness are secured to the board and are functional.

➤ Inspect the board for any visible damage. Replace the board if it is damaged.

>> Return to Operational Issues and Diagnostics

9 DISPOSAL

Place the packaging material in the appropriate recycling waste bins, whenever possible. Consult a local recycling center or specialist dealer for details about how to dispose of the product in accordance with all applicable national and local regulations.

>> Return to Operational Issues and Diagnostics

10 APPENDIX A: SUPPLEMENTAL BULLETINS

⚠ WARNING ELECTRICAL SHOCK, FIRE, EXPLOSION, AND/OR CARBON MONOXIDE HAZARD. Use only Dometic replacement parts and components, which are specifically approved for use with the Furnace. Failure to obey this warning could result in death or serious injury.

Choose one of the following links to move directly to the service bulletin associated with that number:

- 30101
- 31492-916D OBS
- 32267-916D
- 32323-02.10.17
- 32418-916D
- 32437-916D
- 33852-916D
- 35037-916D
- 31294B
- 31493-916D OBS
- 32298-916D
- 32411-916D
- 32424
- 34548-916D
- 38677-916D

>> Return to Operational Issues and Diagnostics

DOMETIC

HEATING FURNACES

EN **Limit Switch Wire Rework**
Service Bulletin

USA & Canada
Service Office
Dometic Corporation
1120 North Main Street
Elkhart, IN 46514

Service Center & Dealer Locations
Visit:
www.dometic.com

Read these instructions carefully.

Furnace Model	Serial Number Range	Field Kit Number	Kit Materials
AFS, AFM, DFS, DFM	73985322 – 81099541	31389	(1) Fiberglass Sleeve: 7″ (length) x 1.5″ (diameter)

1 SLEEVE INSTALLATION

This fix applies to all small and medium DF and AF door and less door furnace units.

1.1 Examining the limit switch wires

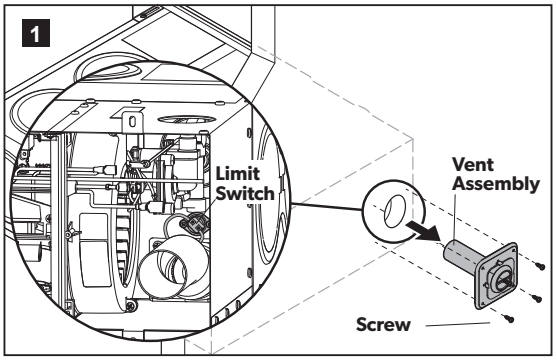

- ➤ Remove the vent assembly, and using a flashlight, look through the opening in the vent cover to inspect the exhaust vent area.
- ➤ Visually examine the limit switch wires for evidence of the following conditions:
  - Wires laying on the exhaust vent tube
  - Melting at any point along the length of the wire
- ➤ If either condition exists, contact the Dometic Technical Service department to obtain authorization for removal of the furnace for replacement, prior to repairing any wires or continuing with this field repair.
- ➤ If no damage is present, proceed with this field repair.

1.2 Placing the sleeve on a DF/AF unit

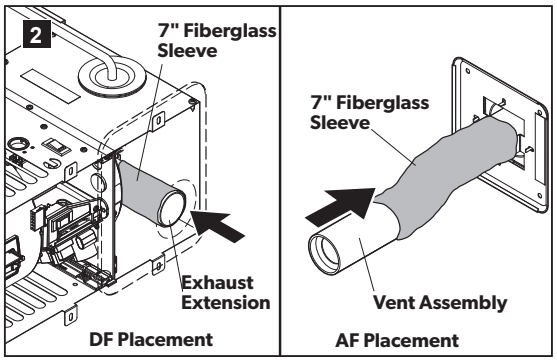

- ➤ Install the fiberglass sleeve:
  - For DF units: slide the fiberglass sleeve over the exhaust extension.
  - For AF units: slide the fiberglass sleeve over the vent assembly.
- ➤ Re-install the vent assembly.

DOMETIC CORPORATION
1120 North Main Street, Elkhart, IN 46514
PHONE: 1-866-869-3118
INTERNET: WWW.EDOMETIC.COM
EMAIL: CUSTOMERSUPPORTCENTER@DOMETIC.COM

LITERATURE NUMBER **MPD 31294**

DC Ignition Wiring Kit

• Effective 9/16

KIT INCLUDES:		
QTY.	**COMPONENTS OF KIT**	**MODELS USED ON**
1	WIRE TIE	ALL MODELS
1	DIAGNOSTIC CODE STICKER	ALL MODELS
1	FOLD OVER SPLICER	79/80 MODELS ONLY
1	BLUE WIRE ASSEMBLY 1/4" M X CONTACT PIN	ALL MODELS
1	RED WIRE ASSEMBLY 1/4" F-90° X 3/16"	79/80 & 89 MODELS ONLY
1	RED F-90° 1/4" F-90° X 1/4" M WIRE ASSEMBLY	ALL MODELS
1	RED WIRE ASSEMBLY 1/4" M X 3/16" F-90°	79/80 & 85 MODELS ONLY

Kits Purpose:

1. New wiring allows blower to be controlled thru ignition control instead of relay in furnace.
2. Wiring allows ignition control to give error codes listed on Diagnostic Sticker.

For ignition control installation refer to instructions supplied with control. These instructions only cover wiring for new ignition control P/N 33488 (CAT. NO. 35-535911-113) to do the above operations.

Wiring Instructions for 79/80-I & 7980-II MODELS

1. Remove red or orange motor wire from relay and connect to terminal marked "BLO" on new ignition control.
2. Discard red wire between relay and circuit breaker. Replace with red wire assembly from kit that has 3/16" F X 1/4" terminals; connect to circuit breaker and terminal marked "PWR" on new control.
3. Connect fold over splice on white wire between limit switch and relay.
4. Connect blue wire assembly from kit to splice and insert into #2 location on edge connector (next to white wire) that goes onto ignition control. Insert pin till it locks into locations.
5. Apply Diagnostic sticker to a visible location on face of Ignition bracket.
6. Use wire tie supplied to hold wires in position.

Wiring Instructions for 85-II, III, IV & 89-II & III Models

1. Remove red motor wire from relay, using red wire from kit with 1/4" M X 1/4" F terminals connect to red motor wire and terminal marked "BLO" on new control.
2. Remove red wire from other side of relay using red wire from kit with 1/4" M X 3/16" F terminals connect to red wire from relay and to terminal marked "PWR" on new control.
3. Remove blue wire from relay and connect to blue wire from kit with 1/4" M X Contact Pin terminals. Connect to blue wire from relay and to #2 location on edge connector on ignition control. (Next to blue or white wire) Insert pin till it locks in location.
4. Apply Diagnostic sticker to a visible location back of blower housing.
5. Use wire tie supplied in kit to hold wiring in position.

7900-I&II 8012-I&II DC WIRING

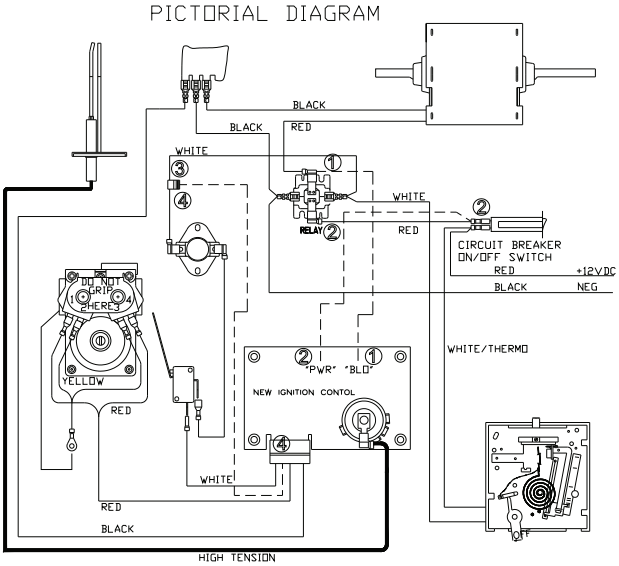

8500-II,III & IV 8900-II & III DC WIRING

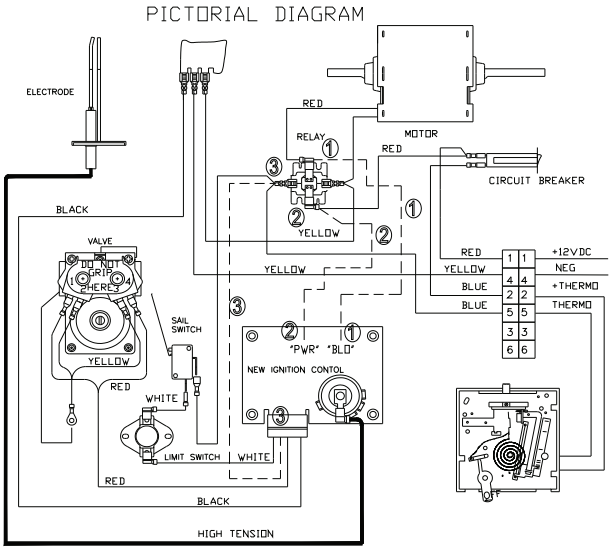

DOMETIC

DOMETIC CORPORATION

1120 North Main Street • Elkhart, IN 46514
PHONE: 1-866-869-3118
INTERNET: www.edometic.com

LITERATURE NUMBER MPD 31492

Model 1H2C Digital Thermostat

FOR STANDARD FURNACES & A/C SYSTEMS

ENGLISH, FRANCAIS (et Canada)

•Installation •Operation

Effective 9/16

THIS THERMOSTAT HAS BEEN DESIGNED TO OPERATE STANDARD AIR CONDITIONING UNITS IN CONJUNCTION WITH A RV FURNACE.

SPECIFICATIONS

Operating Voltage ..... 9VDC to 18VDC
Current Consumption at 12VDC 100mA
Operating Temp. ..... -40F to +185F
Room Temp. Range ..... +55F to +90F
Room Temp. Display Range ..... +35F to +99F
Thermostat Accuracy ..... +/- 1F
Switching Capability A/C .....up to 24 VAC (max. 2 AMPs)

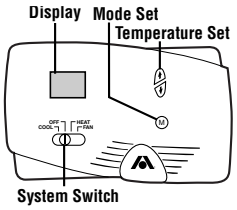

*Note: Move jumper to positions 3 and 4 for RVP Unit. Discard jumper for Dometic®.

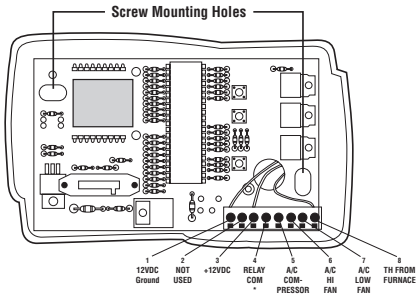

SLIDE SWITCH LEFT		RIGHT		SCROLL ORDER OF DISPLAYED MODES			OPERATION
COOL	OFF	HEAT	FAN				**Furnace Operation**
		●		HI			Furnace cycles to satisfy set point.
COOL	OFF	HEAT	FAN				**Air Conditioner Operation**
●				AU			Air conditioner automatically switches compressor and high and low speed fan when cycling to satisfy set point.
●					HI		Air conditioner compressor and high speed fan cycle to satisfy set point.
●						LO	Air conditioner compressor and low speed fan cycle to satisfy set point.
COOL	OFF	HEAT	FAN				**Fan Operation**
			●		HI		Air conditioner fan runs at high speed to circulate air.
			●			LO	Air conditioner fan runs at low speed to circulate air.
COOL	OFF	HEAT	FAN				**Off**
	●			OF			No operation occurs.

THERMOSTAT INSTALLATION

Thermostat is very sensitive. **HANDLE WITH CARE AT ALL TIMES.**

Locate thermostat 48˝ to 54˝ above floor on an INTERIOR wall. Pick a dry area where air circulation is good. EXTERIOR wall location must have a 3/4˝ spacer between thermostat and exterior wall.

1. Be sure all electrical power has been disconnected from the air conditioner, furnace and the power supply.
2. Do not install the thermostat where there are unusual heating conditions: such as direct sunlight, heat producing appliances (television, radio, wall lamp, etc.) or a furnace or air conditioner supply register.
3. **ATTACHING THE WALL THERMOSTAT.** Separate the thermostat body from the sub-base by gently squeezing the top and bottom, connecting wiring per requirements. Attach thermostat sub-base to the wall at desired mounting location.

WIRING REQUIREMENTS FOR DOMETIC THERMOSTAT

12 VDC ANALOG A/C SYSTEMS (RVP®)

THERMOSTAT TERMINAL # (L-R)	WIRE FROM FURNACE FUNCTION	WIRE FROM A/C FUNCTION
1	-12vdc ground	
2	not used	not used
3 & 4	+12vdc	
5		Compressor
6		High Fan
7		Low Fan
8	Furnace Control	

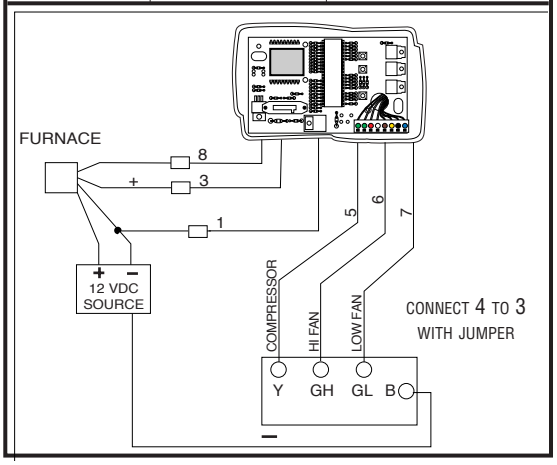

7.5 VDC ANALOG A/C SYSTEMS (DOMETIC®)

THERMOSTAT TERMINAL # (L-R)	WIRE FROM FURNACE FUNCTION	WIRE FROM A/C FUNCTION
1	-12vdc ground	
4		7.5 vdc
3	+12vdc	
5		Compressor
6		High Fan
7		Low Fan
8	Furnace Control	

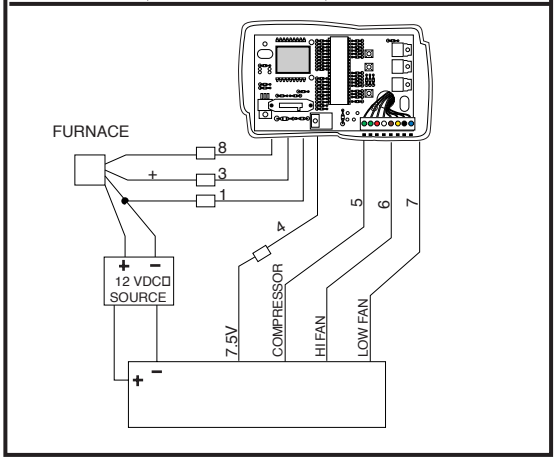

DOMETIC

DOMETIC CORPORATION

1120 North Main Street • Elkhart, IN 46514
PHONE: 1-866-869-3118
INTERNET: WWW.EDOMETIC.COM
EMAIL: CUSTOMERSUPPORTCENTER@DOMETIC.COM

LITERATURE NUMBER MPD 31493

Model 2H2C Two Stage Furnace Digital Thermostat

FOR TWO STAGE FURNACE

ENGLISH, FRANCAIS (et Canada)

•Installation •Operation

Effective 9/16

THIS THERMOSTAT HAS BEEN DESIGNED TO OPERATE STANDARD AIR CONDITIONING UNITS IN CONJUNCTION WITH AN EXCALIBUR 2-STAGE FURNACE.

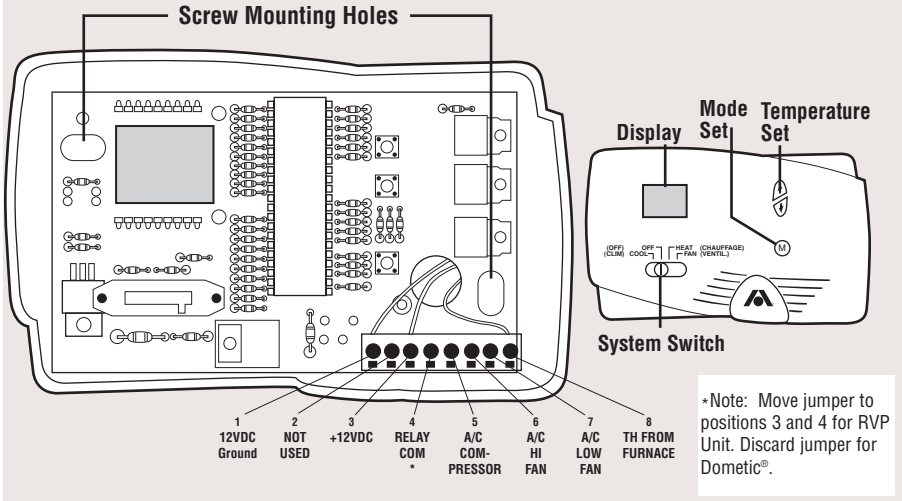

THERMOSTAT INSTALLATION

Thermostat is very sensitive. **HANDLE WITH CARE AT ALL TIMES.**

Locate thermostat 48˝ to 54˝ above floor on an INTERIOR wall. Pick a dry area where air circulation is good. EXTERIOR wall location must have a 3/4˝ spacer between thermostat and exterior wall.

1. Be sure all electrical power has been disconnected from the air conditioner, furnace and the power supply.
2. Do not install the thermostat where there are unusual heating conditions: such as direct sunlight, heat producing appliances (television, radio, wall lamp, etc.) or a furnace or air conditioner supply register.
3. **ATTACHING THE WALL THERMOSTAT.** Separate the thermostat body from the sub-base by gently squeezing the top and bottom. Pull wires through access hole in base plate. Attach thermostat sub-base to the wall at the desired mounting location. Mount the sub-base to the wall before connecting the wires.

System Slide Switch LEFT		RIGHT		SCROLL ORDER OF DISPLAYED MODES					OPERATION
COOL	OFF	**HEAT**	FAN	Scroll Order of Displayed Modes					**Furnace Operation**
		•		AU					Furnace automatically switches between high and low BTU valve and high and low speed fan when cycling to satisfy set point.
		•			HI				Furnace high BTU valve and high speed furnace fan cycle to satisfy set point.
		•				LO			Furnace low BTU valve and low speed furnace fan cycle to satisfy set point.
		•					HF		Furnace fan runs at high speed to circulate air. Air conditioner fan does not run.
		•						LF	Furnace fan runs at low speed to circulate air. Air conditioner fan does not run.
COOL	OFF	HEAT	FAN	Scroll Order of Displayed Modes					**Air Conditioner Operation**
•				AU					Air conditioner automatically switches compressor and high and low speed fan when cycling to satisfy set point.
•					HI				Air conditioner compressor and high speed fan operate to satisfy set point.
•						LO			Air conditioner compressor and low speed fan operate to satisfy set point.
•							HF		Air conditioner fan runs at high speed to circulate air. Furnace fan does not run.
•								LF	Air conditioner fan runs at low speed to circulate air. Furnace fan does not run.
COOL	OFF	HEAT	**FAN**	Scroll Order of Displayed Modes					**Fan Operation**
			•		HI				Air conditioner fan and furnace fan run at high speed to circulate air.
			•			LO			Air conditioner fan and furnace fan run at low speed to circulate air.
COOL	**OFF**	HEAT	FAN	Scroll Order of Displayed Modes					**Off**
	•			OF					No operation occurs.

Specifications

Operating Voltage ..... 9VDC to 18VDC
Power Consumption 100mA
Operating Temperature ..... -40F to +185F
Room Temperature Range ..... +55F to +90F
Room Temperature Display Range .. +35F to +99F
Thermostat Accuracy ..... +/- 1F

DOMETIC
1120 North Main Street · Elkhart, IN 46514
Phone: 1-866-869-3118
Internet: WWW.EDOMETIC.COM
EMAIL :
CUSTOMERSUPPORTCENTER@DOMETIC.COM

LITERATURE NUMBER MPD 32267

INFORMATION NOTICE

FUSE AND CIRCUIT
FURNACE SERIES AFS, AFM

Effective 9/16

This Information Notice addresses installation and management of the electrical circuit for furnace appliances for all Atwood Mobile Products, LLC to avoid circuit overload and possible fuse blows.

All furnaces must be wired on a dedicated circuit not more than 15 amps Furnace installation must follow all applicable state and local codes!

⚠ CAUTION

Make sure all wire connections are tight and protected from damage to reduce over-heating of connections when repairing wiring.

Changes to Atwood's rating plates and installation instruction are as shown below.

Sample change to Rating Plate location on top of furnace.

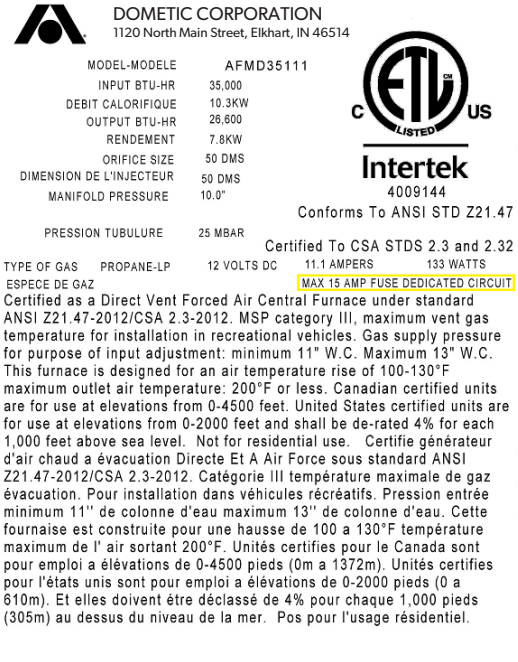
DOMETIC CORPORATION
1120 North Main Street, Elkhart, IN 46514

MODEL-MODELE AFMD35111
INPUT BTU-HR 35,000
DEBIT CALORIFIQUE 10.3KW
OUTPUT BTU-HR 26,600
RENDEMENT 7.8KW
ORIFICE SIZE 50 DMS
DIMENSION DE L'INJECTEUR 50 DMS
MANIFOLD PRESSURE 10.0"
PRESSION TUBULURE 25 MBAR
TYPE OF GAS PROPANE-LP 12 VOLTS DC 11.1 AMPERS 133 WATTS
ESPECE DE GAZ
MAX 15 AMP FUSE DEDICATED CIRCUIT

C ETL LISTED US
Intertek
4009144
Conforms To ANSI STD Z21.47
Certified To CSA STDS 2.3 and 2.32

Certified as a Direct Vent Forced Air Central Furnace under standard ANSI Z21.47-2012/CSA 2.3-2012. MSP category III, maximum vent gas temperature for installation in recreational vehicles. Gas supply pressure for purpose of input adjustment: minimum 11" W.C. Maximum 13" W.C. This furnace is designed for an air temperature rise of 100-130°F maximum outlet air temperature: 200°F or less. Canadian certified units are for use at elevations from 0-4500 feet. United States certified units are for use at elevations from 0-2000 feet and shall be de-rated 4% for each 1,000 feet above sea level. Not for residential use. Certifie générateur d'air chaud a évacuation Directe Et A Air Force sous standard ANSI Z21.47-2012/CSA 2.3-2012. Catégorie III température maximale de gaz évacuation. Pour installation dans véhicules récréatifs. Pression entrée minimum 11'' de colonne d'eau maximum 13'' de colonne d'eau. Cette fournaise est construite pour une hausse de 100 a 130°F température maximum de l' air sortant 200°F. Unités certifies pour le Canada sont pour emploi a élévations de 0-4500 pieds (0m a 1372m). Unités certifies pour l'états unis sont pour emploi a élévations de 0-2000 pieds (0 a 610m). Et elles doivent étre déclassé de 4% pour chaque 1,000 pieds (305m) au dessus du niveau de la mer. Pos pour l'usage résidentiel.

Sample change within the Installation Manuals.

Models	AFMD16	AFMD20	AFMD25	AFMD30	AFMD35
Type of Gas	LP Propane	LP Propane	LP Propane	LP Propane	LP Propane
BTU Input	16,000	20,000	25,000	30,000	34,000
BTU Output	12,160	15,200	19,000	22,800	25,840
Duct Static Pressure	.20" WC*	.10" WC*	.10" WC*	.10" WC*	.10" WC*
Amperage (AMPS)	4.2**	4.2**	7.5**	7.5**	11.1**
Watts	50	50	90	90	132
Power Supply (Volt DC)	12	12	12	12	12
Return Air	80 in^2	80 in^2	80 in^2	80 in^2	80 in^2
Minimum Return Air	65 in^2	65 in^2	65 in^2	65 in^2	65 in^2

MODEL SPECIFICATIONS

*** (WC = WATER COLUMN)**

*** Furnaces must be wired on a dedicated circuit not more than 15 amps. Furnace installation must follow all applicable state and local codes!*

DOMETIC
DOMETIC CORPORATION
1120 North Main Street • Elkhart, IN 46514
PHONE: 1-866-869-3118
INTERNET: WWW.EDOMETIC.COM
EMAIL :
CUSTOMERSUPPORTCENTER@DOMETIC.COM

LITERATURE NUMBER MPD 32298

INSTALLATION INSTRUCTIONS

FURNACE REPLACEMENT

FRONT DISCHARGE 79-AFS

Effective 8/16

Installation Instructions New Furnace Door

Installation instruction is for use only when replacing a 7900/8000 series furnace with an AFS series units.
Replacement Kit #30260 Kit, AFS-79/80 Front Discharge
Outside Door Kit # 32344 #44 Black
Outside Door Kit # 32343 #34 White

⚠ CAUTION
ONLY A QUALIFIED TECHNICIAN
MUST REPLACE OR INSTALL UNIT

REMOVE FURNACE:

1. Remove furnace by removing screws holding outside vent. Remove vent parts from opening.
2. Disconnect furnace ducting and gas line.
3. Remove screws from cabinet holding furnace.
4. Check opening for install of new unit; 8-3/8" x 12-1/2".
5. Install trim ring to cabinet front may require small wood strip across bottom to attache screw.
6. Install duct adapter if front discharge is required and attach ducting to back of grill front.
7. Attach grill front to trim ring with two screws provided.

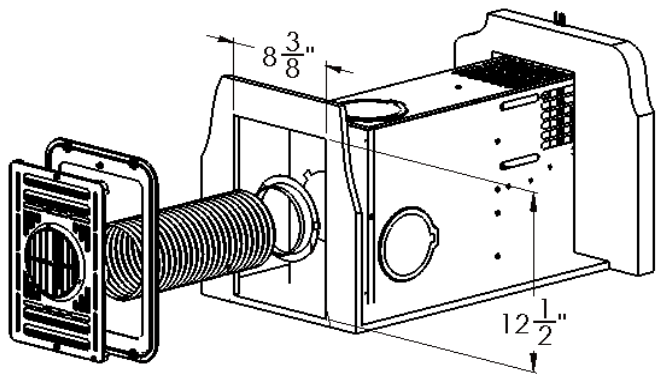

DOOR INSTALL:

1. Measure from floor up 12-1/2".
2. Find center of vent cutout and mark 3-3/4" each side.
3. Check inside to insure no power, gas, water lines are within the cutout area.
4. Install new door as outlined in the installation manual provided with the furnace.
5. Install outer door and vent with eight screws provided (13, 14).

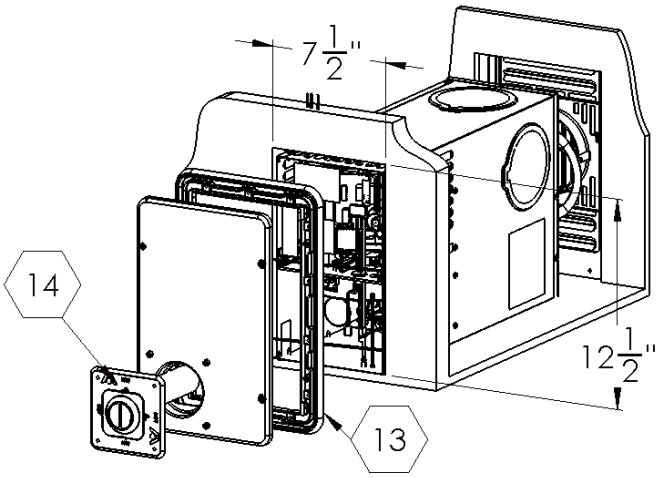

DOMETIC
DOMETIC CORPORATION
1120 North Main Street , Elkhart, IN 46514
Phone : 1-866-869-3118
INTERNET: WWW.EDOMETIC.COM
EMAIL : CUSTOMERSUPPORTCENTER@DOMETIC.COM

MPD 32323

Model HFH-2000
Heating Thermostat

FOR 12 VOLT DC, 24 VOLT AC, GAS HEAT AND /OR OIL HEAT

Revision 4/17

WARNING
PRODUCT DAMAGE

Disconnect electricity to the appliance before installation or service reconnects when through.
DO NOT short control terminals at appliance to test system. The room thermostat will be damaged.
Wiring must conform to local codes and ordinances.
When appliances have time delay controls the system operation will lag behind the thermostat call for heat.

DESCRIPTION

The HFH-2000 room thermostat controls a gas heating system. It senses the room temperature and automatically opens or closes two electrical circuits to a valve or a relay in a heating appliance.

There are two main assemblies, a cover and a base. The cover has a decorative face and comes with a thermometer. The temperature scales are Fahrenheit and Celsius. There are four internal ribs, which fit into guides in the base for centering and holding the cover to the base.

The base mounts to the wall with two screws. Leveling is not required for the unit to function correctly. The system wiring is connected to the thermostat with two screws provided on the back of the base. On the base face side, is located the bimetal coil and a magnet, adjustable anticipator, temperature setting lever and OFF switch. The anticipator adjusts the thermostat to the heating system and can be used to change the system cycles per hour for more even heating cycles. The lever on the base of the thermostat is used to set the temperature to the desired control level. Starting from the left side with the coolest setting and increasing temperature setting as you move to the right indicated by the increase in bar height shown on the thermostat cover.

SPECIFICATION-MODEL HFH-2000	
Color - White	P/N 38453
Color – Brown	P/N 38452
Color – Black	P/N 32300
Electrical Rating	24 Vac Volt Nominal (30 Vac, 1.0 Amp Maximum) 12 Dc Volt Nominal
Application	Two Wire Heating Only
Anticipating	0.1 To 1.0 Amp Adjustable
Temperature Range	50°F To 90°F- 10°C-30°C
Temperature Differential	4°F – 2°C
Size	3" X 3-1/8" X 1-1/2" Approximately

INSTALLATION & OPERATION

For Accurate Temperature Control And Comfort Correct Location Is Very Important.
New Installation – Thermostat Location

- Locate the thermostat on an inside wall about 48" – 54" above the floor (when possible) where it is easy to install and adjust. It should be in a room that is used often, such as a living room.
- DO NOT install the thermostat where there is unusual heating condition such as direct sunlight close to a lamp, radio, television, and radiator, register, near a fireplace or other heat producing appliances.
- DO NOT locate in unusual cooling condition, such as on an outside wall or one separating an unheated room, or in drafts from stairwells, doors or windows.
- DO NOT locate in a damp or humid area. This can shorten thermostat life due to corrosion.
- DO NOT locate where air circulation is poor, such as in a corner, alcove or behind an open door.
- DO NOT install unit until all construction work and painting have been completed.

Replacement Installation – Thermostat location
When replacing an old thermostat, install the new one in the same location unless the above conditions suggest otherwise.

WARNING
MERCURY – HAZARDOUS WASTE

Some old thermostats may contain mercury. Handle with care, dispose of properly.
This thermostat contains no mercury.

Tools Required

Wire stripper or knife, drill with 1/16" bit, screwdriver, level and a pencil.

Removing Old Thermostat

Please read all instructions carefully, as you complete each step, check the adjoining square.

Disconnect electricity and turn off gas to the heater.
Remove cover from old thermostat.
Loosen all screws on the old thermostat and remove it from the wall
Make note of wires and to which terminals they are attached as you disconnect them. For example: Yellow wire to terminal Y. Red wire to terminal RH," etc.
Strip insulation 3/8" from wire ends and clean off any corrosion.

DOMETIC CORPORATION
1120 North Main Street • Elkhart, IN 46514
PHONE: 1-866-869-3118
INTERNET: WWW.EDOMETIC.COM
EMAIL : CUSTOMERSUPPORCENTER@DOMETIC.COM

LITERATURE NUMBER MPD 32411

INSTALLATION INSTRUCTIONS

FURNACE REPLACEMENT

BOTTOM DISCHARGE 89- AFL

Effective 9/16

Installation Instructions Bottom Discharge

In cases where a bottom discharge system is used, the new unit requires an extension kit to relocate the opening to match the 89 location.

This installation instruction is for use only when replacing an 8900 series furnace with an AFL series.

32337 KIT, BOTTOM DISCHARGE AFL-89

⚠ CAUTION

ONLY A QUALIFIED TECHNICIAN MUST REPLACE OR INSTALL UNIT

REMOVE FURNACE:

1. Remove 89 furnace.

INSTALLATION OF KIT:

1. Remove back cover (6) from furnace by removing 4 screws fig 1.
2. Remove side panel (8) from furnace by removing 3 screws fig 1. With side panel removed, flatten vertical flange and set aside for later assembly.
3. Assemble extension kit (4) so that small holes are to the same side, screw together with screws (7) provided fig 2.
4. With back cover off mark 1/2" x 10 cut out as shown fig 3.
5. Attach extension box to back of furnace with 3 screws removed from step 1 fig 4.
6. Attach side panel (8) to side of furnace with 4 screws. Flattened vertical flange will overlap outside of extension box.
7. Install furnace over opening in floor and seal with foil tape or some other means.

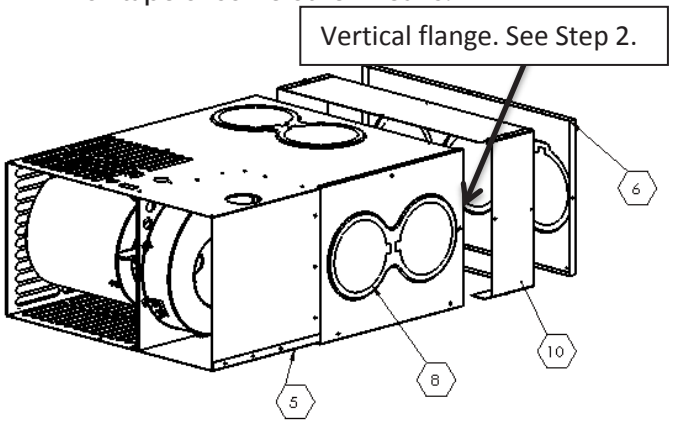

Figure 1

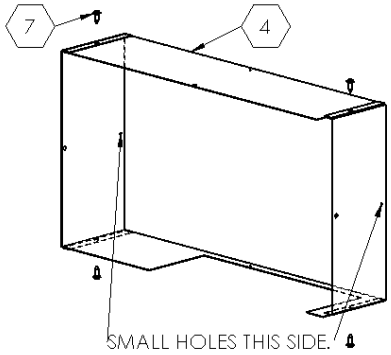

Figure 2

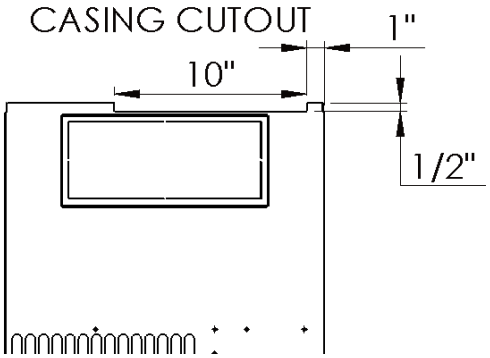

Figure 3

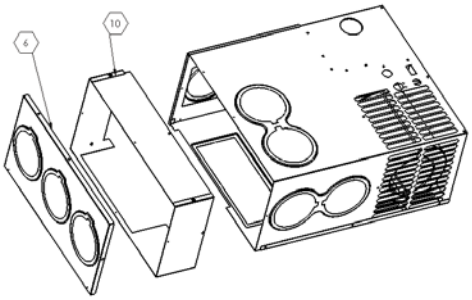

Figure 4

DOMETIC CORPORATION
1120 North Main Street • Elkhart, IN 46514
PHONE: 1-866-869-3118
INTERNET: CUSTOMERSUPPORTCENTER@DOMETIC.COM

LITERATURE NUMBER MPD 32418

INSTALLATION INSTRUCTIONS

FURNACE REPLACEMENT

CASING CUTOUT 85-AFM

Effective 9/16

Installation Instructions AFM Casing Bottom Discharge

In cases were bottom discharge is has been used for 85 the new AFM series needs to be modified for size and location.

This installation instruction is for use only when replacing 8500 series furnace with AFM series.

⚠ CAUTION

ONLY A QUALIFIED TECHNICIAN MUST REPLACE OR INSTALL UNIT

REMOVE FURNACE:

1. Remove existing furnace from opening.

INSTALL AFM FURNACE:

1. Remove furnace from box and lay top down
2. Mark on casing bottom per layout drawing the new cutout opening. Make sure to start with a pilot hole in location noted.
3. After hole has been cut install into coach and align with cutout in floor
4. Seal opening with foil tape to insure no air leakage.

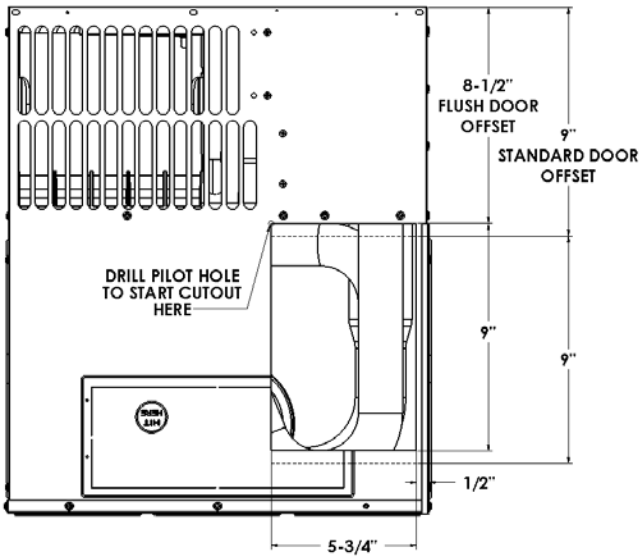

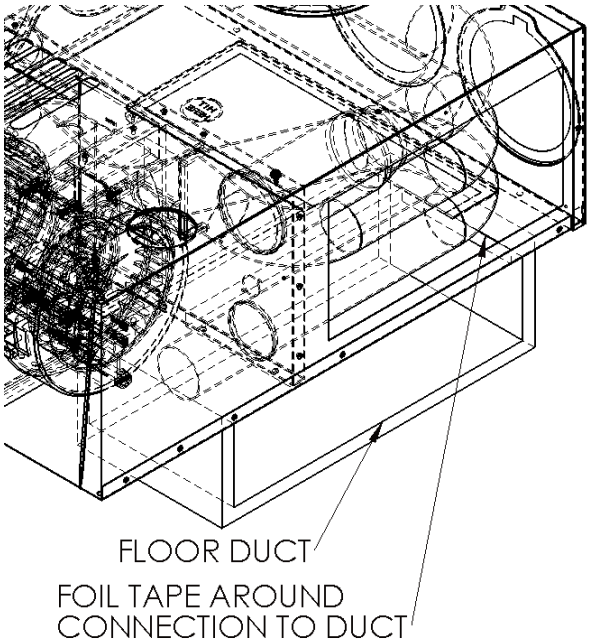

1120 North Main Street • Elkhart, IN 46514
PHONE: 574•264•2131 **FAX:** 574•206•9713
INTERNET: http://www.atwoodmobile.com

LITERATURE NUMBER MPD 32424

INSTALLATION INSTRUCTIONS

FURNACE REPLACEMENT

TRIM RING INSTALL 89-AFL

7/15

Installation Instructions- AFL Furnace with Flush Door

Instructions for removing "89" furnace with recessed door and replacing with "AFL" furnace with flush door.
This installation instruction is for use only when replacing an 89 series with an AFL series.
32422 KIT, RING TRIM AFL-89 BLACK #44
32423 KIT, RING TRIM ALF-89 WHITE #34

⚠ CAUTION

ONLY A QUALIFIED TECHNICIAN MUST REPLACE OR INSTALL UNIT

REMOVE "89" FURNACE:

1. Remove furnace by removing 4 door screws (7).
2. Remove screws from around the face of the bezel (8).
3. Bend sheet metal tabs out straight and remove bezel.
4. Remove vent cap assembly (6).
5. Remove two mounting brackets (10) from sides.
6. Disconnect furnace ducting and gas line.
7. Remove furnace (May be screwed down in rear).

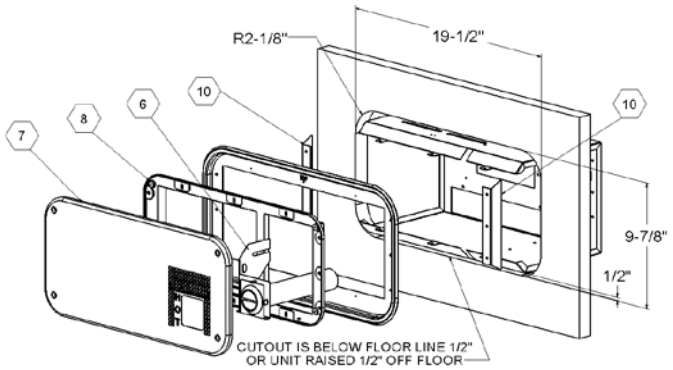

Figure 1

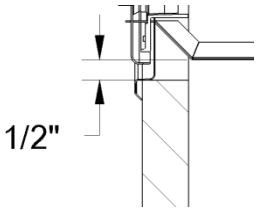

INSTALL "AFL" FURNACE:

1. If opening is below floor line router additional 1/2" for a total of 1" below the floor then measure up 11-1/8" for top cut.
2. Install wood shims or blocking between bezel tabs and wall cutout setting shim 5/16" from face of wall. Flush door mounting tabs should not have more than 1/16" gap or bezel could distort when screwed in place (See Fig 2).
3. Install furnace and connect ducting and gas line.
4. Caulk trim ring on both sides of part (6).
5. Place trim ring on back of bezel with flanges towards inside of coach (7).
6. Install bezel and trim ring into cutout and screw to framing. Make sure to keep the parts tight against the exterior wall. A frame work structure is required to fasten the bezel correctly.
7. Pull furnace forward until flush with bezel inside ring and put 6 screws thru bezel into furnace casing (Fig 2). For more detail information see installation manual supplied with furnace.

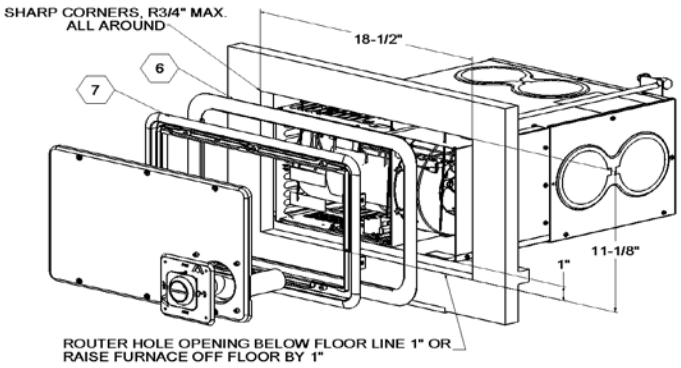

Figure 2

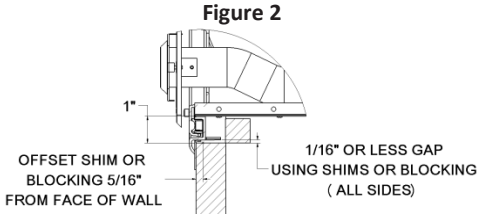

DOMETIC
DOMETIC CORPORATION
1120 North Main Street • Elkhart, IN 46514
PHONE: 1-866-869-3118
INTERNET: WWW.EDOMETIC.COM
EMAIL : CUSTOMERSUPPORTCENTER@DOMETIC.COM

LITERATURE NUMBER **MPD 32437**

INSTALLATION INSTRUCTIONS

FURNACE REPLACEMENT

TRIM RING INSTALL 85-AFM

Effective 9/16

Installation Instructions- AFM Furnace with Flush Door

Instructions for removing "85" furnace with recessed door and replacing with "AFM" furnace with flush door.
This installation instruction is for use only when replacing an 85 series furnace with an AFM series unit.
32438 KIT, RING TRIM AFM-85 BLACK#44
32439 KIT, RING TRIM AFM-85 WHITE#34

⚠ CAUTION

ONLY A QUALIFIED TECHNICIAN MUST REPLACE OR INSTALL UNIT

REMOVE FURNACE:

1. Remove furnace by removing 4 door screws (7).
2. Remove screws from around the face of the bezel (8).
3. Bend sheet metal tabs out straight and remove bezel.
4. Remove vent cap assembly (6).
5. Remove two mounting brackets (10) from sides.
6. Disconnect furnace ducting and gas line.
7. Remove furnace. (May be screwed down in rear.)

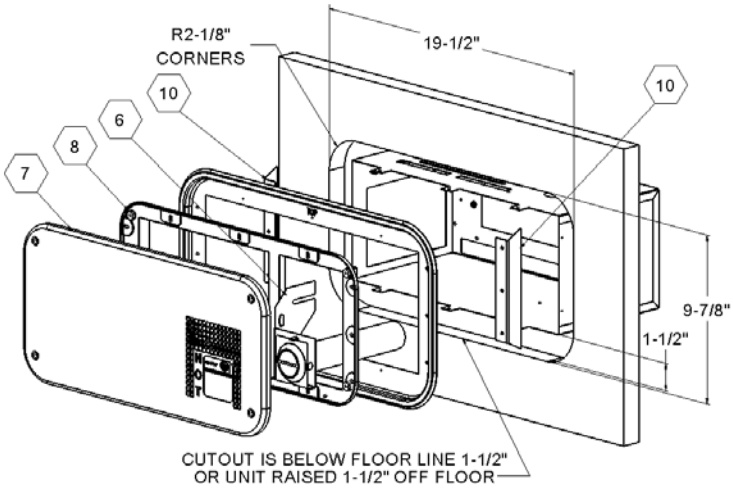

Fig. 1

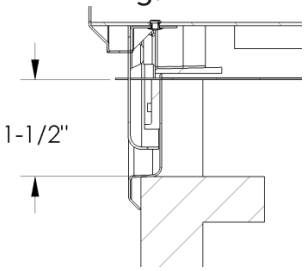

INSTALL FURNACE:

1. If opening is 9-1/8" high and 1-1/2" below floor line no additional cutting is required. Test fit bezel to furnace casing and router cutout opening at corners, if needed, to ensure clearance with bezel corners.
2. Install wood shims or blocking between bezel tabs and wall cutout setting shim 5/16" from face of wall. Flush door mounting tabs should not have more than 1/16" gap or bezel could distort when screwed in place (See Fig. 2).
3. Install furnace and connect ducting and gas line.
4. Caulk (6) trim ring on both sides of part.
5. Place trim ring on back of (7) bezel with flanges towards inside of coach.
6. Install bezel and trim ring into cutout and screw to framing. Make sure to keep the parts tight against the exterior wall. A frame work structure is required to fasten the bezel correctly.
7. Pull furnace forward until flush with bezel inside ring and put 6 screws through bezel into furnace casing (Fig. 2). For more detailed information see installation manual supplied with furnace.

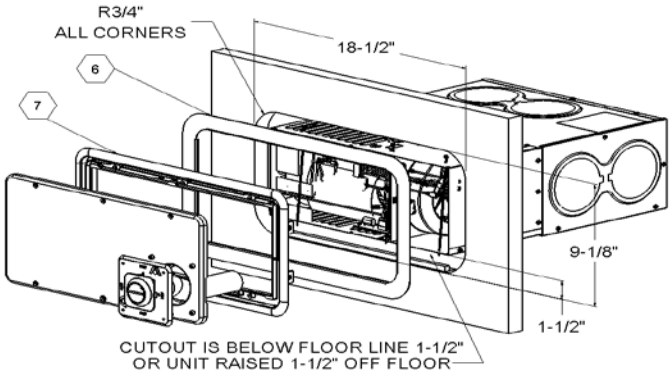

Fig.2

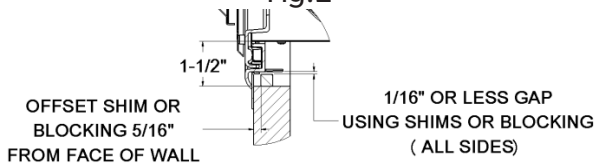

DOMETIC CORPORATION
1120 North Main Street • Elkhart, IN 46514
Phone: 1-866-869-3118
INTERNET: WWW.EDOMETIC.COM
EMAIL: CUSTOMERSUPPORTCENTER@DOMETIC.COM

Literature number 33852

8500& 890 Series Furnaces
RECESS PAN AND DOOR

Installation Sheet

English **Effective 9/16**

This instruction sheet is for use by an authorized service technician to install a Dometic furnace. Should you require further information, contact your dealer or nearest Dometic Service Center.
Follow this installation instruction to insure safe operation of the furnace. Failure to install furnace according to this installation instruction nullifies the furnace warranty.

⚠ WARNING
Avoid possible injury or death

Improper installation, adjustment, alteration, service or maintenance can cause property damage, personal injury or loss of life. Refer to the installation instructions and/or owners manual provided with this appliance. Installation and service must be performed by a qualified installer, service agency or the gas supplier.

TO THE INSTALLER: LEAVE THIS MANUAL WITH THE APPLIANCE.
TO THE CONSUMER: RETAIN THIS MANUAL FOR FUTURE REFERENCE.

Cut a 19-1/" X 9-7/8" hole as shown. A wood or metal frame around opening to secure mounting bracket to must be provided. Note: Corners on outer skin and frame work must have a radius or a 45° chamfer cut to allow Recess Pan to fit correctly or water damage will occur.

1. Locate and secure mounting brackets to frame work position the bracket 5/16" back from outside wall and secure through holes provided.
2. Place the furnace inside the cutout and connect the gas and electrical and duct work.
3. Apply calking to the back flange of the recess pan and the mounting bezel parts. Insert the mounting bezel into the recess pan and position both over the furnace by inserting the six (6) tabs through the slots into the mounting bezel.
4. Bend the casing tabs to the outside and align the top three holes with holes in the casing bezel. Make sure that the door is square with in the recess pan and secure with twelve (12) screws.
5. After door assembly has been completed secure the furnace legs to the flooring inside the coach.

Refer to Installation Manual for more information if needed.

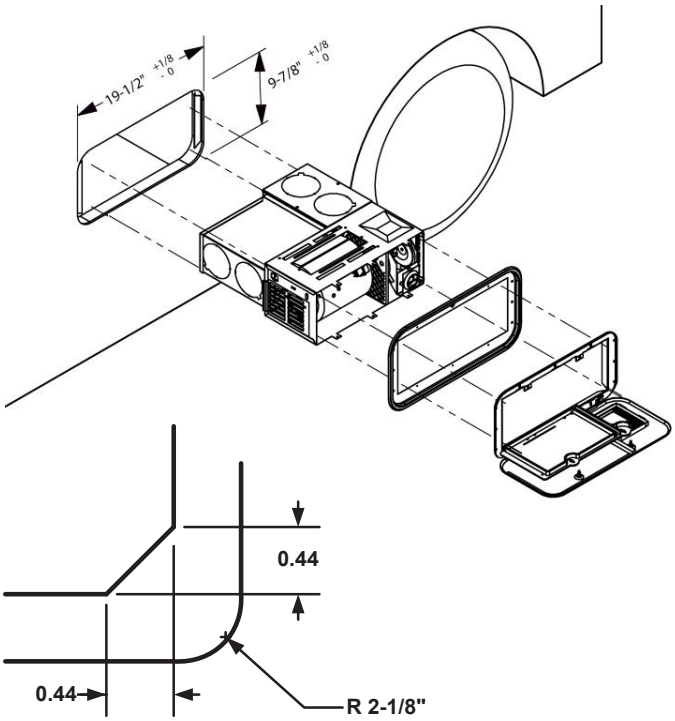

CORNER CUTOUT DETAILS

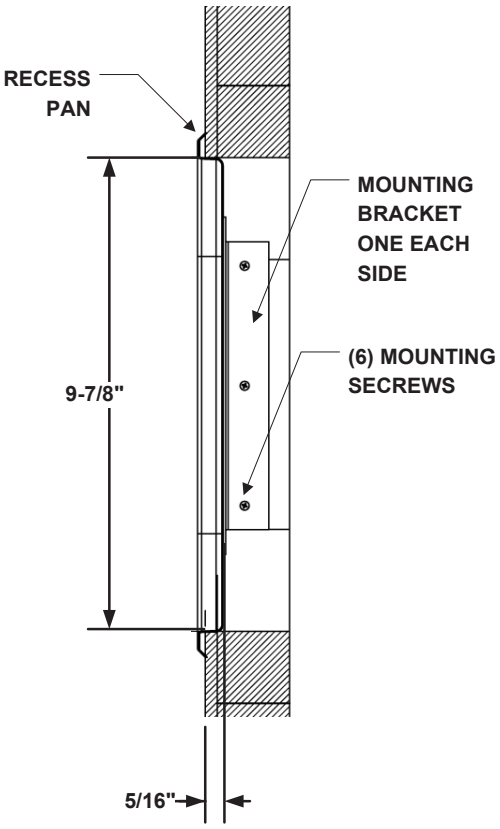

BRACKET FACE TO SIDEWALL FACE

DOMETIC CORPORATION
1120 North Main Street Elkhart, IN 46514
Phone: 1-866-869-3118
Internet: WWW.EDOMETIC.COM
EMAIL :CUSTOMERSUPPORTCENTER@DOMETIC.COM

Literature Number 34548

8500 Series Furnace RECESSED VENT

Installation Sheet

Effective 9/16

This instruction sheet is for use by an authorized service technician to install a Dometic furnace. Should you require further information, contact your dealer or nearest Dometic Service Center.
Follow this installation instruction to insure safe operation of the furnace. Failure to install furnace according to this installation instruction nullifies the furnace warranty.

TO THE INSTALLER: LEAVE THIS MANUAL WITH THE APPLIANCE.

TO THE CONSUMER: RETAIN THIS MANUAL FOR FUTURE REFERENCE.

⚠ **WARNING** Avoid possible injury or death	⚠ **WARNING** CARBON MONOXIDE POISONING
Improper installation, adjustment, alteration, service or maintenance can cause property damage, personal injury or loss of life. Refer to the installation instructions and/or owners manual provided with this appliance. Installation and service must be performed by a qualified installer, service agency or the gas supplier.	• Furnace must be installed and vented to these instructions. • Improper installation, adjustment, alteration, service or maintenance can cause injury or property damage. • Improper installation location may cause furnace to produce negative pressure, affecting combustion air or venting of other appliances.

STEP 1

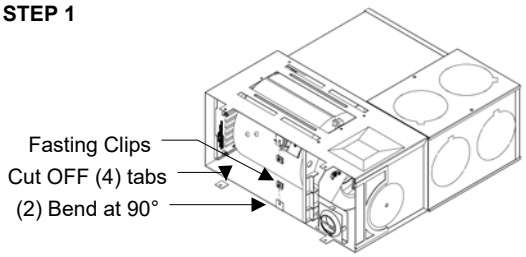

- Remove (4) of the six tabs located on the control box. Leave the two center tabs for mounting the door.
- Bend the two center tabs towards the inside of the control box area so they are at 90° degrees.
- Tabs must be bent as close to the control box edge as possible to maintain a seal.
- Install two fasting clips provided.

STEP 2

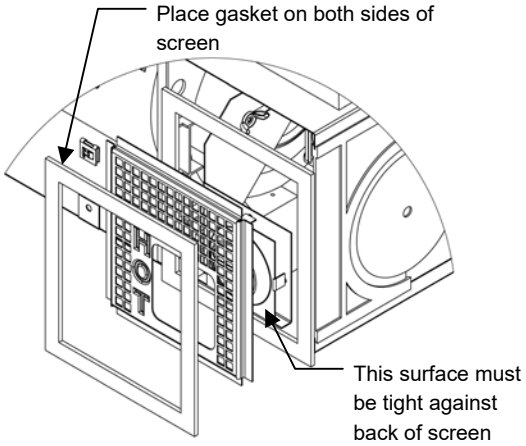

- Install furnace into coach locating the unit as close to the outer compartment door as possible.
- This area must maintain a pressure seal against the gaskets on the screen.
- This seal is used to maintain flue products and water leakage from entering the interior of the coach.

STEP 3

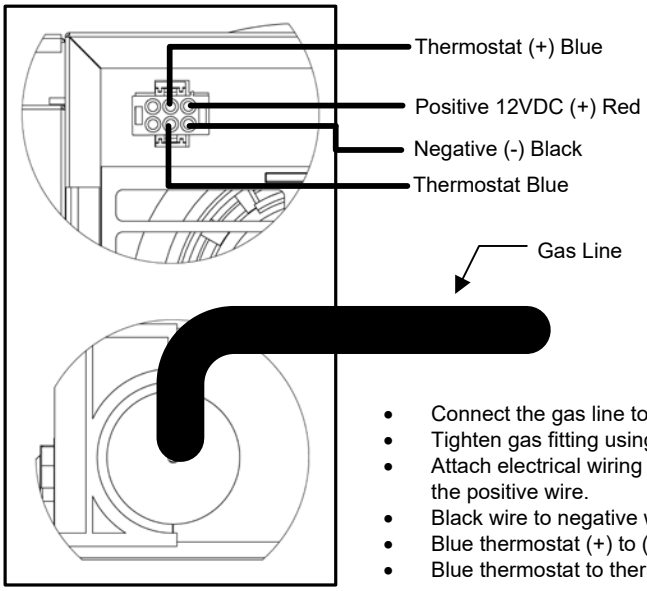

- Connect the gas line to the right side of the furnace.
- Tighten gas fitting using two wrenches.
- Attach electrical wiring to left side of furnace by attaching red wire to the positive wire.
- Black wire to negative wire.
- Blue thermostat (+) to (+) thermostat wire.
- Blue thermostat to thermostat wire.

STEP 4

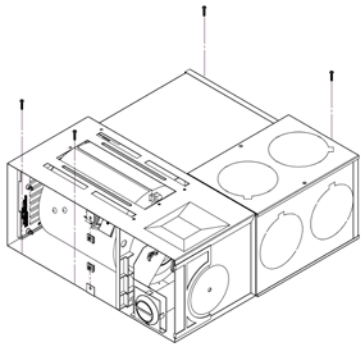

- Secure the furnace to coach floor with four screws to maintain proper location of the unit to the opening in the outside compartment door.

CAUTION USE CARE IN LOCATING SCREWS TO AVOID DAMAGE TO WORKING COMPONENTS.

STEP 5

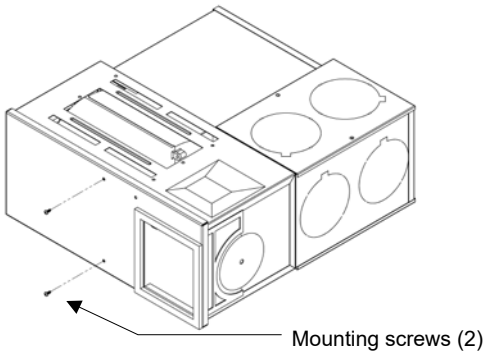

- Place recess cover over front of furnace, making sure all edges of door are outside of control box.
- Hold filmily into place why using the holes in the door to locate the mounting tabs and clips.
- Using a #8 or #10 sheet metal screw, fasten door into place.

GASKET ON RECESS COVER MUST SEAT TIGHT AGAINST CONTROL BOX EDGES.
OUTSIDE COMPARTMENT DOOR MUST PUSH TIGHT AGAINST GASKET.

LITERATURE NUMBER MPD 35037

DOMETIC
DOMETIC CORPORATION
1120 North Main Street, Elkhart, IN 46516
PHONE: 1-866-869-3118
Internet: WWW.EDOMETIC.COM
EMAIL: CUSTOMERSUPPORTCENTER@DOMETIC.COM

Manifold Installation

AFS, AFM, AFL Furnaces

Kit Part Number 35712
Manifold Extension

FOR YOUR SAFETY
READ ALL INSTRUCTIONS BEFORE OPERATING

Installer: Provide these instructions to the consumer. **Consumer:** Keep documents for future reference.

Effective 9/16

SERVICE CALLS & QUESTIONS

Location and phone numbers of qualified Service Centers can be found at our website http://www.edometic.com or call 866-869-3118 to locate a Service Center.

SAFETY ALERT SYMBOLS	
Safety Symbols alerting you to potential personal safety hazards. Obey all safety messages following these symbols.	
⚠ **WARNING** avoid possible injury or death	⚠ **CAUTION** avoid possible injury and/or property damage

⚠ WARNING
MAY CAUSE PERSONAL INJURY OR DEATH

For your safety and protection, it is important that this installation manual is read and understood before installation or use. Failure to properly install the unit or attempting to modify it in any way can be extremely hazardous and may result in property damage and/or personal injury and will void

⚠ WARNING
EXPLOSION OR FIRE

- Improper installation, adjustment, alteration, service or maintenance can cause injury or property damage.
- For assistance or additional information consult Dometic Customer Service Department, a qualified installer or gas supplier.
- Follow directions exactly for proper installation, adjustment, service and maintenance.
- Do not use matches, candles or other sources of ignition to test fittings and gas lines for leaks.

⚠ CAUTION
PROPERTY DAMAGE

Care must be taken when connecting the manifold extension to the gas valve. Do not cross-thread the flare fitting, use the proper tools and apply the correct torque.

Installation Procedure

1. Remove the existing grommet from the furnace and discard.
2. Install the flare fitting from the manifold pipe to the gas valve and turn by hand 2-3 times to ensure it is not cross-threaded.
3. Align the manifold bracket screw hole to the casing and attach with an 8-18 screw (not provided).
4. Hold the gas valve by hand and tighten the flare fitting to the manifold pipe with a ¾" torque wrench to 20-25 ft/lbs.
5. Place the "Warning! Not a Handle" sticker near the manifold.
6. After installation is complete turn on gas supply.
7. Check connection for gas leaks using a non-corrosive leak detection fluid. Do not use soap and water solution.
8. Fasten the rubber grommet supplied with the manifold to the furnace casing.

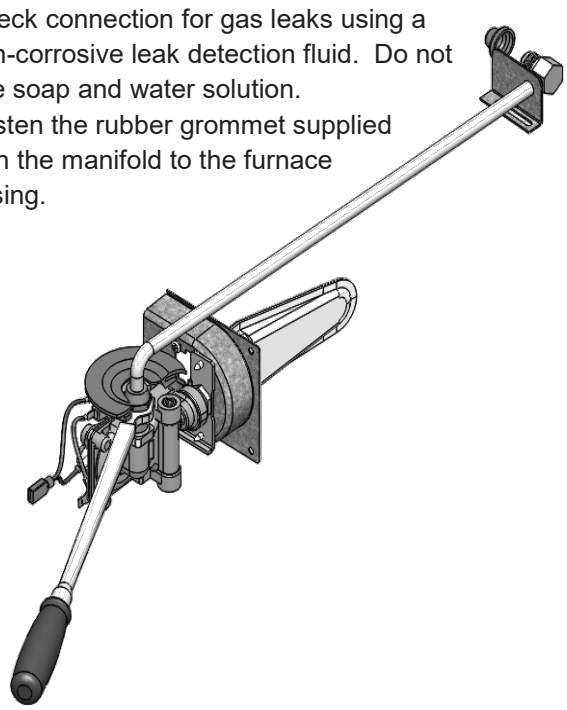

DOMETIC
DOMETIC CORPORATION
1120 North Main Street. Elkhart, IN 46514-3203
Phone: 1-866-869-3118
Internet: WWW.EDOMETIC.COM
Email: CUSTOMERSUPPORTCENTER@DOMETIC.COM

LITERATURE NUMBER MPD 38677

KIT EXTERNAL RELAY REPLACEMENT
DC IGNITION CONTROLS

Effective 9/16

This kit contains a new DSI board that will function as a direct field replacement or when wired correctly will control blower operation and give a diagnostic error flash code for four faults within the system. The wires are also included for the blower control option.
The blower control option can not be used on the following models FA-78, DC-82, 85-I & II, & 89-II. The 79/80-I & II, 85-III, 85-IV & 89-III can be used for either option.

Instructions for installing the DSI Board without Blower Control

Remove old DSI board by removing (2) screws in bracket. Install new board by locating in same configuration as old board. If the mounting plate is made of sheet metal use spacers that are provided, place them between the DSI board and bracket. Secure the DSI board to bracket with existing (2) screws. If the old board being replaced is a 05-15 series, new holes will have to be drilled in DSI bracket to mount board.

Instructions for installing DSI Board with Blower Control

79/80-I & II Series

1. Install DSI board using existing (2) screws. Use spacers provided between board and bracket if bracket is made of sheet metal.
2. Remove red lead going to relay from junction box, connect red wire with ¼" male and 3/16" terminals to the end of red lead from junction box and the other end to power (PWR) terminal on new DSI board.
3. Remove (+) motor lead from relay and connect to blower (BLW) terminal on new DSI board.
4. Install blue fold over splice provided, 2-3" down from limit switch on white wire from relay.
5. Install blue wire with ¼" male and edge connector terminals to splice and edge connector for DSI board #2 locations. (Opening next to white wire.)
6. Apply diagnostic code sticker to DSI bracket for future reference.

85-III & 85-IV Series

1. Install DSI board using existing (2) screws. Use spacers provided between board and bracket if bracket is made of sheet metal.
2. Remove blue or red wire from relay, opposite (+) motor lead. Connect red wire from kit with ¼"male & 3/16" female terminals to blue wire removed from relay and power (PWR) terminal on DSI board.
3. Remove (+) motor lead from relay and connect red wire from kit with ¼"male &
4. ¼"female terminals to (+) motor lead and blower (BLW) terminal on DSI board.
5. Remove splice on blue wire from relay and connect blue wire from kit with ¼" male & edge connector terminals into splice and edge connect for DSI board #2 locations. (Opening next to white wire.)
6. Use wire tie provided on wiring to keep away from blower opening.
7. Apply diagnostic code sticker to back of blower housing for future reference.

89-III DC Series

1. Install DSI board using existing (2) screws. Use spacers provided between board and bracket if bracket is made of sheet metal.
2. Remove red wire from circuit breaker to relay and discard. Replace with red wire from kit with ¼" female & 3/16" female terminals. Connect to circuit breaker and power (PWR) terminal on DSI board.
3. Remove (+) motor lead from relay and connect red wire from kit with ¼" male & ¼" female terminals to (+) motor lead and blower (BLW) terminal on DSI board.
4. Remove splice on blue wire from relay and connect blue wire from kit with ¼" male & edge connector terminals into splice and edge connect for DSI board #2 locations. (Opening next to blue wire.)
5. Use wire tie provided on wiring to keep away from blower opening.
6. Apply diagnostic code sticker to back of blower housing for future reference.