2017 MANUAL

DOMETIC FURNACE TRAINING MANUAL

Effective 11/16
Part Number 30620
©2016 DOMETIC CORPORATION
ELKHART , IN 46514

Mobile living made easy.

DOMETIC

1120 North Main Street • Elkhart, IN 46514-3203
USA & Canada: 1-866-869-3118
INTERNET: http://www.atwoodmobile.com

1/2015

INTRODUCTION

The 2015 edition of the Dometic Furnace Service Manual is a resource created to help service technicians identify Dometic product by serial number, diagnose service problems and efficiently and effectively process warranty claims.

Each of the manuals within this series offers a general overview of the product as well as more specific product information. For each product within the manual, you will find model identification, recommended tools and equipment, a sequence of operation, warning, annual maintenance procedures, parts and troubleshooting guides, warranty procedures, flat rate schedules, and replacement part reference charts.

Due to the rapidly changing personal computer revolution, we have placed troubleshooting information in a variety of places to make sure that the most accurate information is available. The best place to find the current information about Dometic products is our website: www.atwoodmobile.com. At our website brochures may be downloaded, troubleshooting guides reviewed and the latest information bulletins can be read. In addition, all Dometic Authorized Service Centers are listed on our site, accessible via an easy-to-use search system.

Service for all Dometic products is handled out of our Elkhart location. Should you have any questions regarding our products or the information contained in this manual simply dial 1-866-869-3118 and select option 5.
Be sure to have the Model and Serial Number when you call.

Dometic Service Department
hydro flame™

FURNACES TABLE OF CONTENTS

RECOMMENDED TOOLS AND EQUIPMENT 4
AFS SERIES MODEL IDENTIFICATION 5
- REQUIRED DUCTING 5
- DISCHARGE AND DUCTING 6
- AFS Wiring 6

AFM SERIES MODEL IDENTIFICATION 7
- REQUIRED DUCTING 7
- REQUIRED DISCHARGE 7
- AFM Wiring 8

AFL SERIES MODEL IDENTIFICATION 9
- REQUIRED DUCTING 9
- REQUIRED DISCHARGE 10
- AFL Wiring 10

79 / 80 SERIES MODEL IDENTIFICATION 12
- DUCTING CONFIGURATIONS 13
- 79 / 80 SERIES Directionnel Louver Insert (PN 36959) 13
- Wiring Diagrams 7900 & 8012 Models 13
- 8500 SERIES Model Identification 15
- Wiring Diagrams 8500 Models 16

8900 SERIES MODEL IDENTIFICATION 20
- Wiring Diagrams 8900 Models 20

85 / 89 2-STAGE SERIES MODEL IDENTIFICATION 23
- Wiring Diagrams 2-Stage Models 24
- Fig 1 2-STAGE with Field Plug 24
- Fig 2 2-STAGE without Field Plug 24

MODEL HFH 2000 BI METAL THERMOSTAT 25
- INSTALLATION & OPERATION 25

DIGITAL THERMOSTAT MODEL 1H2C 27
- Specifications 27
- WIRING REQUIREMENTS FOR THERMOSTAT 28

DIGITAL THERMOSTAT MODEL 2H2C TWO STAGE 29
- Specifications 29
- WIRING REQUIREMENTS FOR TWO STAGE THERMOSTAT 29

SEQUENCE OF OPERATION – DC MODELS (STANDARD UNITS) 30
SEQUENCE OF OPERATION – DC MODELS (2- STAGE EXCALIBUR™ FURNACES ONLY) 32
SEQUENCE OF OPERATION – PILOT MODELS 33
SEQUENCE OF OPERATION – AC MODELS 34
CRITICAL INSTALLATION CRITERIA 35
ANNUAL PREVENTATIVE MAINTENANCE INSPECTION 35
MECHANICAL THERMOSTAT 36
CIRCUIT BREAKER & MOTOR 37
CIRCUIT BOARDS 38
RELAY 38
SAIL SWITCH 39
LIMIT SWITCH 39
DUAL SOLENOID GAS VALVE 39
BURNER HEAD, ELECTRODE AND VALVE ASSEMBLY 40
#4- RETURN AIR 42
TROUBLE SHOOTING GUIDES 42
- Mechanical Thermostat 42
- Furnace – Electronic Ignition Models 43
- Furnace – Electronic Ignition Models (continued) 44
- Furnace – Electronic Ignition Models (continued) 45
- FURNACE TERMINOLOGY 46

FLAT RATE SCHEDULE 48
8500-IV LD & 2-STAGE SERIES FURNACE PARTS 62
8900-IV DC & AC - LD & 2-STAGE SERIES FURNACE ARTS 67
WARRANTY 71
FURNACE EXTENDED SERVICE CONTRACT 71
- TERM AND PROVISIONS: 71
- EXCLUSIONS (SPECIFICALLY EXCLUDED FROM THE WARRANTIES) 71
- LIMITATIONS 71

Disclaimer: The data presented in this publication is obtained from the most reliable sources, and is believed to be authentic as of the date of publication. Responsibility for typographical errors or omission of data cannot be assumed by the publishers.

Recommended Tools and Equipment

U-Tube Manometer – This is the most accurate device for measuring gas pressure. If you use a dial-type manometer, it should be calibrated periodically with this type of manometer.

U-TUBE MANOMETER
with 1/8" pipe nipple

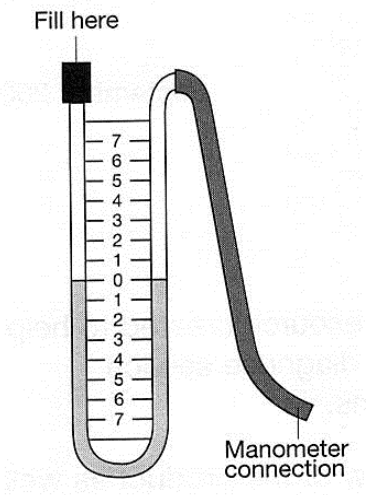

Multi-meter – This is the most effective meter capable of reading voltage, amperage and continuity. A test light cannot give you specific enough information to trouble-shoot a furnace properly.

VOLT OHM-AMP METER

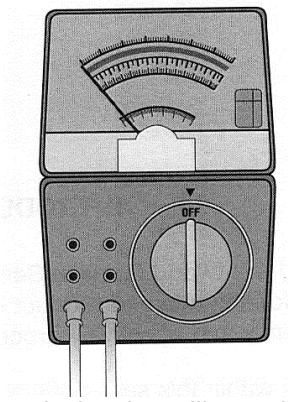

Circuit Board Tester – This is a table top device that will test all furnace circuit boards. It will specifically test the following board functions: power, spark, lamp, sense and valve. It will test Fenwal and Channel circuit boards.

Air Speed Indicator – This hand held device will let you determine air flow out of a heat register. It will help you isolate restricted ducting.

Incline Manometer – This meter measures the static pressure of the furnace cavity. It provides an x-ray of the total heating system. It will indicate if all of the heat being produced by the furnace is being sufficiently distributed out to the heat registers.

Long-handled Allen Wrenches (9/64" and 1/8") – These two wrenches are necessary to remove the blower wheels and combustion wheels from old models.

Common Hand Tools – ¼" nut driver, open end wrenches, flat blade and Phillips screw drivers.

Leak Test Solution – A solution that bubbles when applied to gas fittings or connections showing where a gas leak is present.

AFS Series Model Identification

AFS Model Nomenclature

AF	SA	D	12	1	1	1	A
Furnace	Cabinet Size	Voltage	Input BTU/h	Type Of Gas	Style	Rate Stages	Rev
	SA = Low Amps	D = DC	12,000 16,000	1=LP	1=Door	1= Single	
	S= Small		20,000	2=LP/ NAT	2=LD (small vent)		
					3=Door w/rear gas fitting (rg)		
					4=Door w/connector (pt)		
					5-Door w/ rear gas fitting and connector (rgpt)		

Applications – This unit is typical installed in a tent camper, truck camper and small travel trailers due to its small size and lower BTU capacities. It is sometimes used in larger trailers or motor homes for smaller zone heating in conjunction with one of the larger model furnaces.

Heat Outlets – This furnace can be setup as a front discharge unit only or a ducted unit without the front discharge or a combination of both front and 4" duct outlets. Unit can be installed in a horizontal or vertical position. The front discharge can be connected directly to the furnace if within 2" of wall. If not the unit can be order with a 1 foot duct of 5" diameter flex hose to allow for position and location of the front grill. To determine the most efficient ducting configuration, refer to Minimum Ducting Configuration.

Directional Louver Insert – If you need to direct heat to the front or rear of a camper and you cannot use soft ducting and registers, the front grill center section can be rotated 360° to direct the air.

Serviceability – Practically all of the components of this furnace are accessible by removing the exterior door. Therefore, the furnace does not need to be removed for most repairs. The only components that are not accessible without removing the furnace is the heat exchanger. If optional small vent is used furnace must be removed from the inside of the coach for all service needs.

Power Consumption – The AFS 12,000 and 16,000 series furnace draws only 3.4 amps and the AFS 20,000 draws 4.8 amps. Our AFSA model furnace has a heating capacity of 12,000 BTU's and only draws 2.4 amps. This furnace is ideal for dry camping but only come as a front discharge unit.

REQUIRED DUCTING

All ducts in the table are four-inch ducts except for front discharge as noted. Two-inch ducts can be used in place of one four inch but require (2) two-inch to replace one four-inch duct. A front discharge system using a five-inch duct requires no other ducts maximum length 12".
Optional five-inch to four-inch adapter ducting can be purchased to allow four-inch duct in addition (1) four-inch or (2) two-inch ducts must also be used when using four-inch front option. Front duct must not exceed 12".

FOR OPTIMAL PERFORMANCE:
Use the following ducting recommendations. Top Duct is used only in addition to these requirements and is not allowed to be used until these requirements are met. Additional ducting when added will reduce the airflow through the ducting and could cause poor heating and or cycling on high temperature limit.

- **Horizontal or Vertical 4" Ducting;** when using 4" ducting one duct from each side must be used. Unless the front discharge is used with either the 5" duct and grill or optional 4" ducting.
- **'No Bottom Discharge system allowed".**

DISCHARGE AND DUCTING

Model	Required Discharge Area			
AFSA (12)	FRONT GRILL or 15 in^2			
AFS (12) (16) (20)	24 in^2			
	Models			
	AFSD12	AFSD16	AFSD20	AFSAD12
Side Ducts	2	2	2	X
Front with Side Ducting	1	1	1	X
Front Only 5" duct	1	1	1	1
Front Only 4"	2	2	2	X

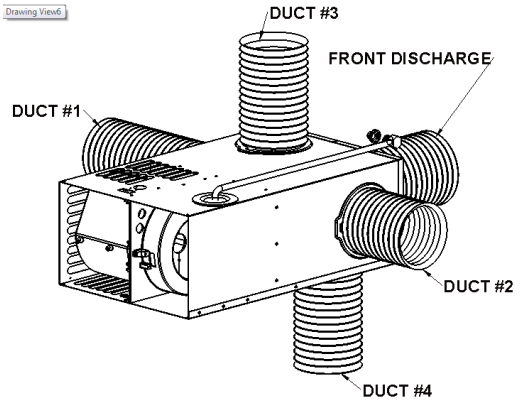

AFS Wiring

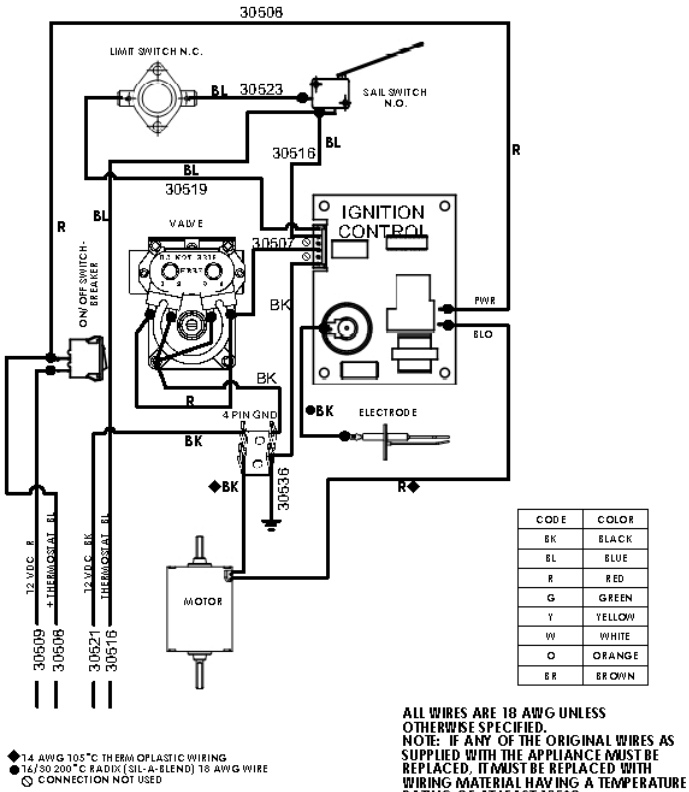

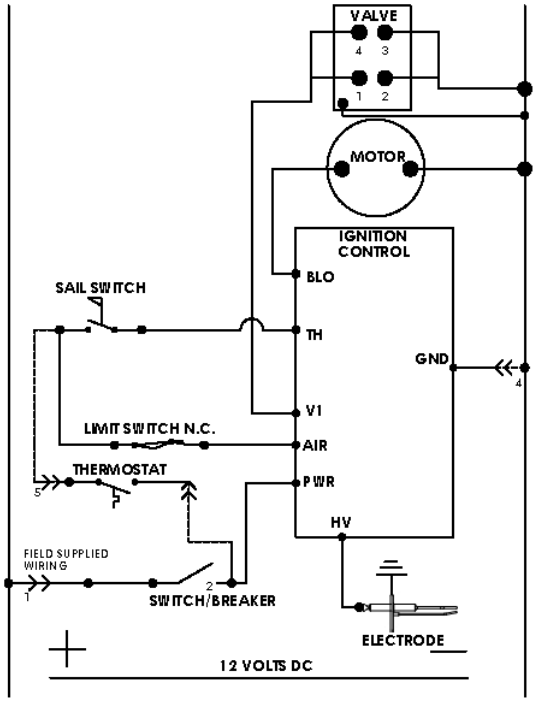

CAUTION: DO NOT HI-POT (DIELECTRIC HIGH VOLTAGE TEST) THIS UNIT AFTER INSTALLATION. TO DO SO MAY CAUSE COMPONENT DAMAGE AND VOIDS WARRANTY OF FURNACE. UNIT 100% FIRE CHECKED.

AFM Series Model Identification

AFM Model Nomenclature

AF	M	D	25	1	1	1	A
Furnace	Cabinet Size	Voltage	Input BTU/h	Type Of Gas	Style	Rate Stages	Rev
	M= Medium	D = DC	16,000	1=LP	1=Door	1= Single	
			20,000		2=LD (small vent)		
			25,000				
			30,000		3=Door w/rear gas fitting (rg)		
			35,000				
					4=Door w/connector (pt)		
					5-Door w/ rear gas fitting and connector (rgpt)		

Applications – This unit is typically installed in travel trailers, 5th wheels and motor homes.

Installation – This series of furnace can be installed either vertically or horizontally. If installed vertically, the exhaust port must be located at the bottom. Extra care must also be given in sealing this type of installation. Consult the installation manual for details.

Heat Outlets – This furnace can be bottom discharged to a hard duct system, soft ducted out the back to a discharge plate into a hard duct system or completely soft ducted from a combination of the nine outlets located on both sides top and back of the furnace. Refer to the installation manual for the ducting requirements of the specific model of furnace.

Serviceability - This entire furnace is serviceable without removing it from the RV when installed with the outer door option. Therefore, there is no need to bench test it. All components are accessible by merely opening the access door. We strongly recommend trouble-shooting the furnace while it is installed in the RV.

Power Consumption - This furnace is designed to draw between 4.3 and 11.1 amps depending on the model of the furnace. Refer to the furnace specification decal when trouble-shooting its electrical system.

REQUIRED DUCTING

All ducts in the table are four-inch ducts except for bottom discharge as noted. Two-inch ducts can be used in place of four inch but require (2) two-inch to replace one four-inch duct.
A bottom discharge requires no additional ducting; one additional duct can be added if required. Vertically installed units can also be bottom discharge when right side cover panel has been removed one additional duct can be added if required.

FOR OPTIMAL PERFORMANCE use the following instructions for ducting. (Two top ducts are only to be used in addition to the below installations and are not allowed to be used until these requirements have been met). Additional ducting added will reduce the air flow and could cause poor heating.

- **Horizontal or Vertical 4" Ducting:** when using 4" ducting one duct from each side must be used. When using side ducts, utilizing rear duct openings as the other duct will yield the best performance.
- **Horizontal Bottom Discharge:** This installation is for horizontally installed units and can be used with the addition of one duct any location except the top two.
- **Vertical Bottom Discharge:** Installation of the furnace in a vertical mounting position can be used with the addition of one duct any location except the top two. What is the top??

REQUIRED DISCHARGE

Models	Required Discharge Area
AFM (16)(20)	24 in^2
AFM (25)(30)(35)	36 in^2
Horizontal Bottom	48 in^2
Vertical Bottom	48 in^2

System	AFMD16	AFMD20	AFMD25 AFMD30 AFMD35
4" Ducts	2	2	3

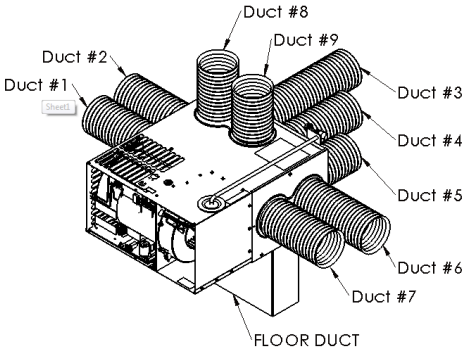

Horizontal Bottom	4 x 10	4 x 10	4 x 10
Vertical Bottom	5 x 9-3/4	5 x 9-3/4	5 x 9-3/4

AFM Wiring

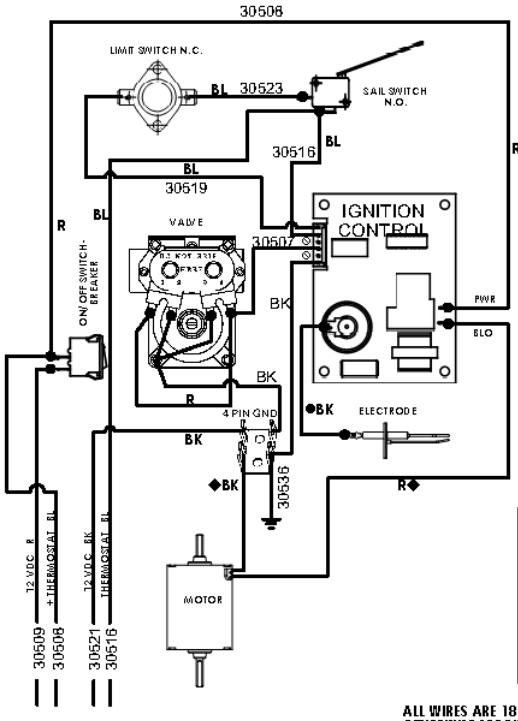

CODE	COLOR
BK	BLACK
BL	BLUE
R	RED
G	GREEN
Y	YELLOW
W	WHITE
O	ORANGE
BR	BROWN

◆14 AWG 105°C THERMOPLASTIC WIRING
●16/30 200°C RADIX (SIL-A-BLEND) 18 AWG WIRE
⊘ CONNECTION NOT USED

ALL WIRES ARE 18 AWG UNLESS OTHERWISE SPECIFIED.
NOTE: IF ANY OF THE ORIGINAL WIRES AS SUPPLIED WITH THE APPLIANCE MUST BE REPLACED, IT MUST BE REPLACED WITH WIRING MATERIAL HAVING A TEMPERATURE RATING OF AT LEAST 105°C.

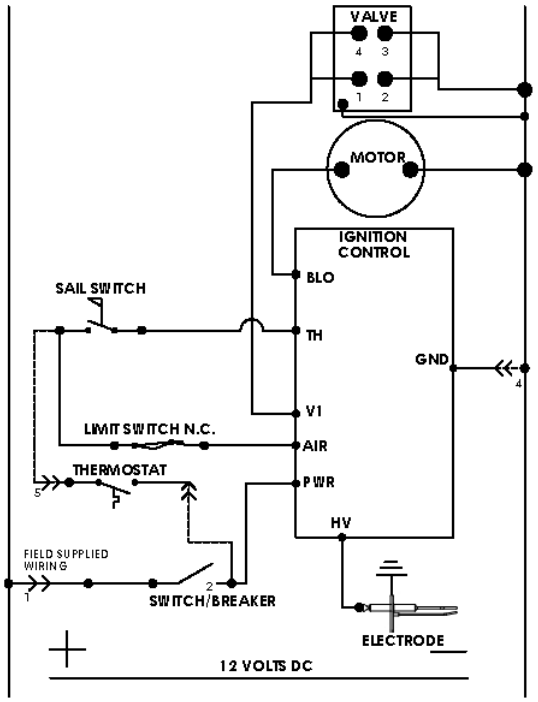

CAUTION: DO NOT HI-POT (DIELECTRIC HIGH VOLTAGE TEST) THIS UNIT AFTER INSTALLATION. TO DO SO MAY CAUSE COMPONENT DAMAGE AND VOIDS WARRANTY OF FURNACE. UNIT 100% FIRE CHECKED.

AFL Series Model Identification

AFL Model Nomenclature

AF	L	D	35	1	1	1	A
Furnace	Cabinet Size	Voltage	Input BTU/h	Type Of Gas	Style	Rate Stages	Rev
	L= Large	D = DC	35,000	1=LP	1=Door	1= Single	
		A = AC	40,000	2=LP/ NAT	2=LD (small vent)		
					3=Door w/rear gas fitting (rg)		
					4=Door w/connector (pt)		
					5-Door w/ rear gas fitting and connector (rgpt)		

Applications – This unit is typically installed in travel trailers, 5th wheels and motor homes.

Installation – This series of furnace can be installed either vertically or horizontally. If installed vertically, the exhaust port must be located at the bottom. Extra care must also be given in sealing this type of installation. Consult the installation manual for details.

Heat Outlets – This furnace can be bottom discharged to a hard duct system, soft ducted out the back to a discharge plate into a hard duct system or completely soft ducted from a combination of the eight outlets located on both sides, back and top of the furnace. Refer to the installation manual for the ducting requirements of the specific model of furnace.

Serviceability - This entire furnace is serviceable without removing it from the RV when installed with the outer door option. Therefore, there is no need to bench test it. All components are accessible by merely opening the access door. We strongly recommend trouble-shooting the furnace while it is installed in the RV.

Power Consumption – The DC furnace is designed to draw 12.5 amps and the AC model draws 2.5 amps. Refer to the furnace specification decal when trouble-shooting its electrical system.

REQUIRED DUCTING

All ducts in the table are four-inch ducts except for bottom discharge as noted. Two-inch ducts can be used in place of four inch but require (2) two-inch to replace one four-inch duct.
A bottom discharge requires no additional ducting; one additional duct can be added if required. Vertically installed units can also be bottom discharge when right side cover panel has been removed one additional duct can be added if required.

FOR OPTIMAL PERFORMANCE: use the follow instruction for ducting. (Two top ducts are only supplied for use in addition of these installation and are not allowed to be used until these requirements have been met). Additional ducting added will reduce the air flow and could cause poor heating.

- **Horizontal or Vertical 4" Ducting:** when using 4" ducting one duct from each side must be used. When using side ducts rear duct openings will give the best performance.
- **Horizontal Bottom Discharge:** This installation is for horizontally installed units and can be used with the addition of one duct any location except the top two.
- **Vertical Bottom Discharge:** Installation of the furnace in a vertical mounting position can be used with the addition of one duct any location except the top two.

REQUIRED DISCHARGE

Models	Required Discharge Area
AFL (35)(40)	36 in^2
Horizontal Bottom	48 in^2
Vertical Bottom	48 in^2

System	AFLD35	AFLD40	AFLA35	AFLA40
4" Duct	3	3	3	3
Bottom	1	1	1	1
Vertical Bottom	1	1	1	1

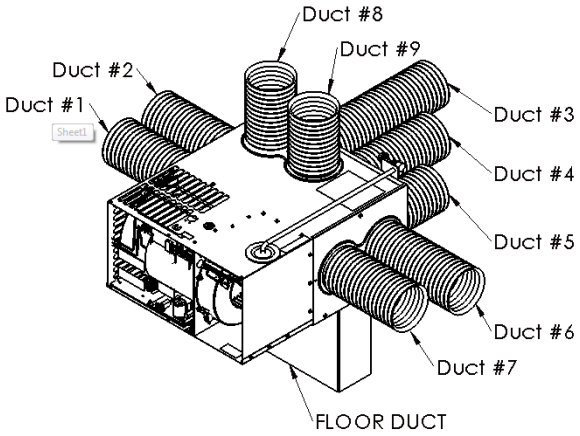

AFL Wiring

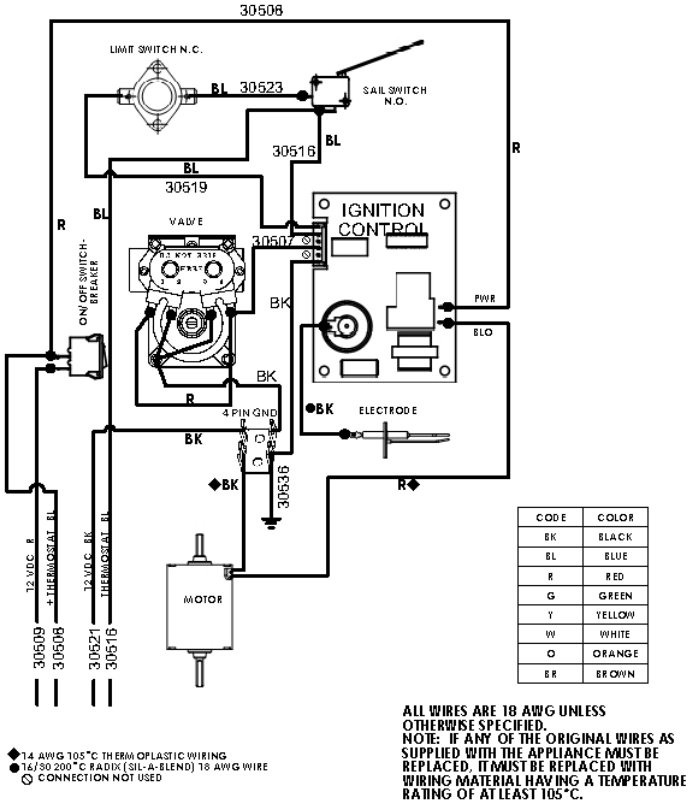

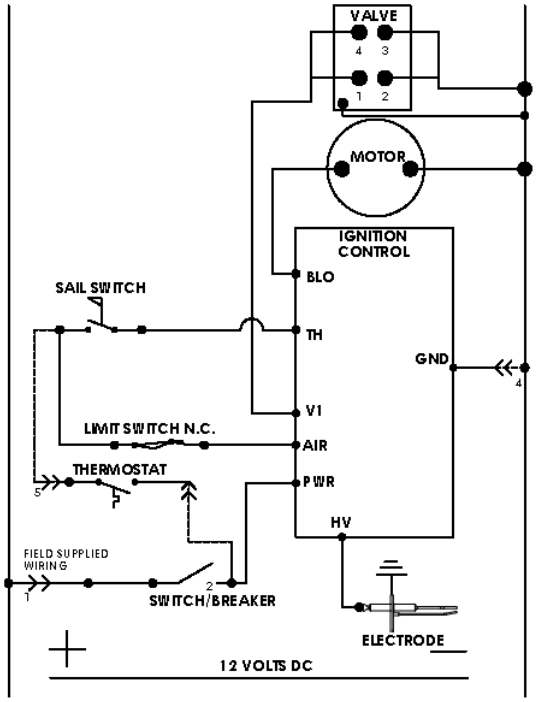

CAUTION: DO NOT HI-POT (DIELECTRIC HIGH VOLTAGE TEST) THIS UNIT AFTER INSTALLATION. TO DO SO MAY CAUSE COMPONENT DAMAGE AND VOIDS WARRANTY OF FURNACE. UNIT 100% FIRE CHECKED.

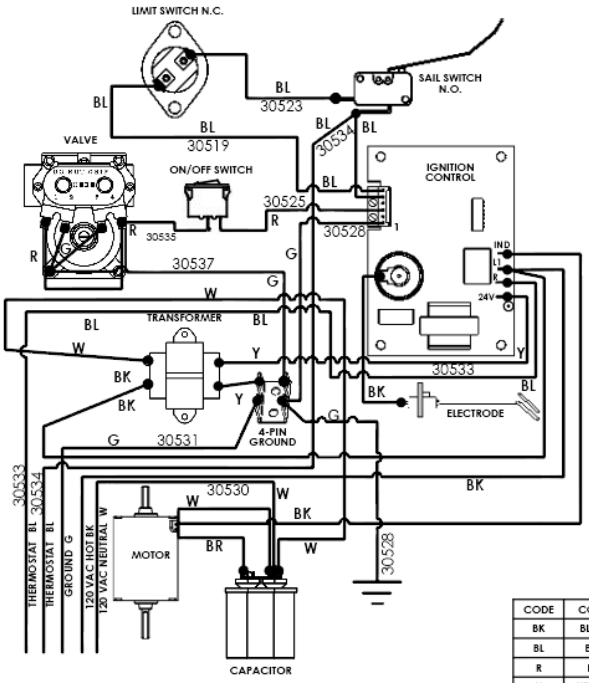

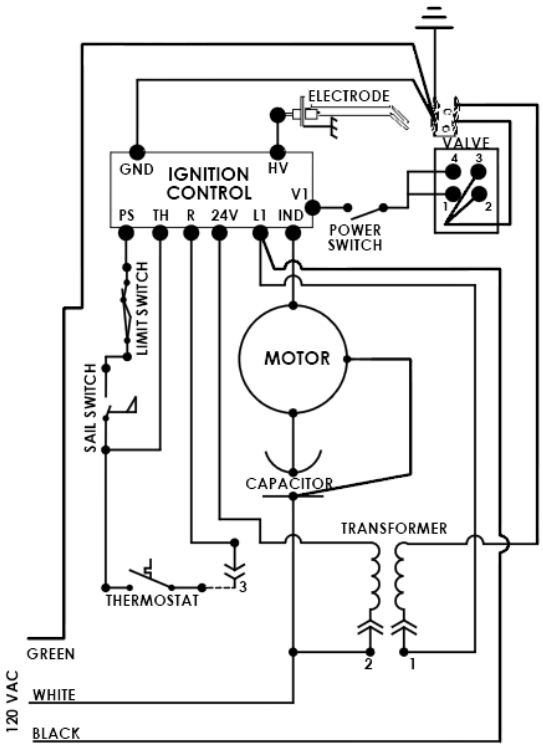

ALL WIRES ARE 18 AWG 105° C THERMOPLASTIC RATED UNLESS OTHERWISE SPECIFIED.
NOTE: IF ANY OF THE ORIGINAL WIRES AS SUPPLIED WITH THE APPLIANCE MUST BE REPLACED, IT MUST BE REPLACED WITH WIRING MATERIAL HAVING A TEMPERATURE RATING OF AT LEAST 105°C.

CODE	COLOR
BK	BLACK
BL	BLUE
R	RED
Y	YELLOW
W	WHITE
G	GREEN
BR	BROWN
O	ORANGE

18 AWG 105°C THERMOPLASTIC WIRING

© CONNECTION NOT USED

CAUTION: DO NOT HI-POT (DIELECTRIC HIGH VOLTAGE TEST) THIS UNIT AFTER INSTALLATION. TO DO SO MAY CAUSE COMPONENT DAMAGE AND VOIDS WARRANTY OF FURNACE. UNIT 100% FIRE CHECKED.

79 / 80 SERIES Model Identification

79/80 Series Model Identification

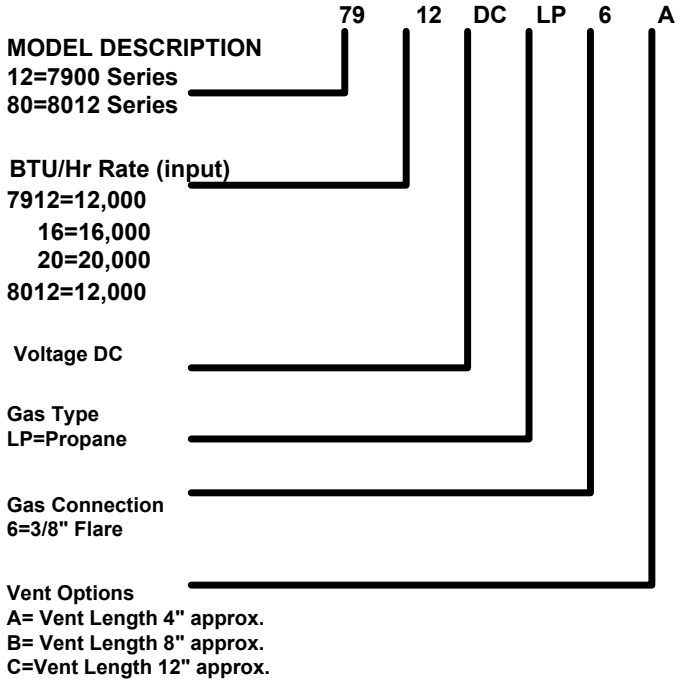

Applications – This unit is typical installed in a tent camper, truck camper and small travel trailers due to its small size and lower BTU capacities. It is sometimes used in larger trailers or motor homes for smaller zone heating in conjunction with one of the larger model furnaces.

Heat Outlets – This furnace is usually set up as a front side discharge unit. However, it does have a 4” duct outlet on either side of it casing for soft ducting to remote outlets. To determine the most efficient ducting configuration, refer to Minimum Ducting Configuration.

Directional Louver Insert – If you need to direct heat to the front or rear of a camper and you cannot use soft ducting and registers, and optional diverter plate with 55° degree louvers can be added to the front exhaust box.

Serviceability – Practically all of the components of this furnace are accessible by removing the front grille. Therefore, the furnace does not need to be removed for most repairs. The only components that are not accessible without removing the furnace are the blower motor; sail switch, blower, and combustion wheel.

Power Consumption – The 79 series furnace draws only 3.4 amps. However, an 8012 model furnace has a heating capacity of 12,000 BTU’s and only draws 1.8 amps. This furnace is ideal for dry camping but only come as a front discharge unit.

MINIMUM DUCTING CONFIGURATION

7912-II 7916-II, 7920-II – SIDE DISCHARGE UNITS –
Provides the most air flow and heat to remote heat outlets the duct runs need to be as short and straight as possible for optimal heating.

7912-II 7916-II, 7920-II – SIDE DISCHARGE UNITS –
With front discharge –
The majority of the heat discharges out aft front. A minimal amount of heat will pass through the side ducts. These duct runs need to be as short as possible. An optional air diverter with 55° degree angle vanes can be added to front discharge opening to direct heat fore or aft in the trailer.

8012-II, 7912-II, 7916-II, 7920-II – FRONT DISCHARGE UNIT –
No ducts allowed on 8012-II –
The heat discharges only through the front. The optional directional louver insert can be added to front discharge opening to direct heat left or right of the furnace door opening.

DUCTING CONFIGURATIONS

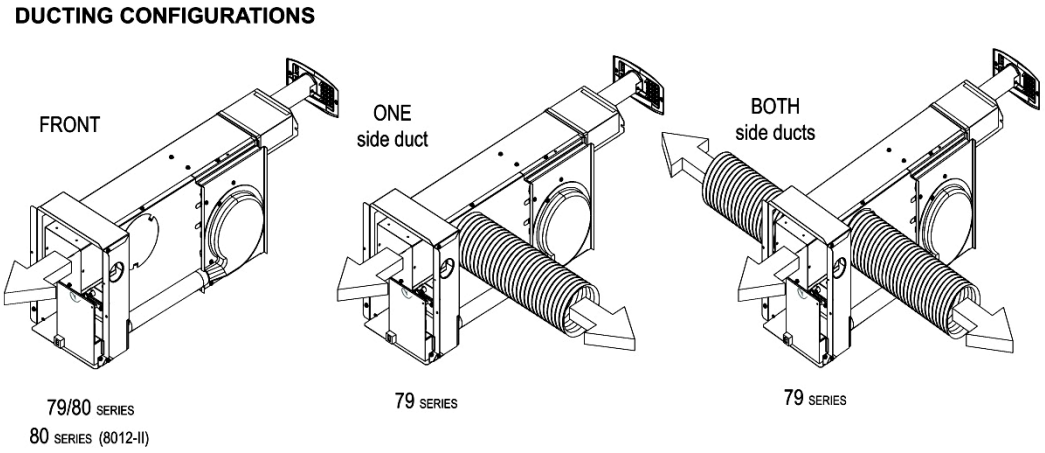

79 / 80 SERIES Directionnel Louver Insert (PN 36959)

A directional louver grill is available for all models. This grill has fins that are set at a 55° degree angle. This will allow you to direct the heat fore or aft in the camper.

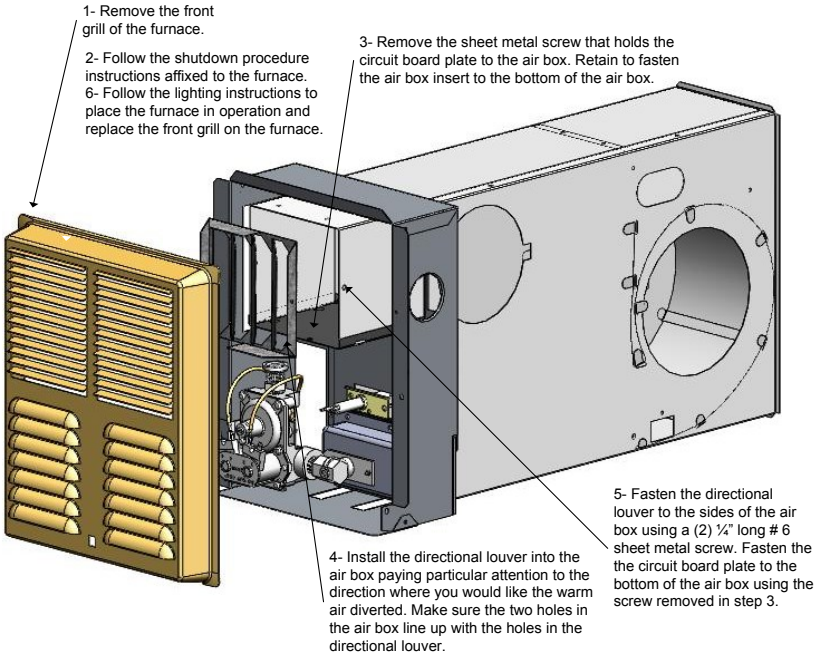

Wiring Diagrams 7900 & 8012 Models

IMPORTANT

If any original wire has to be replaced, it must be replaced with type 105°C or its equivalent. Note: Wire colors may be different then original wiring.

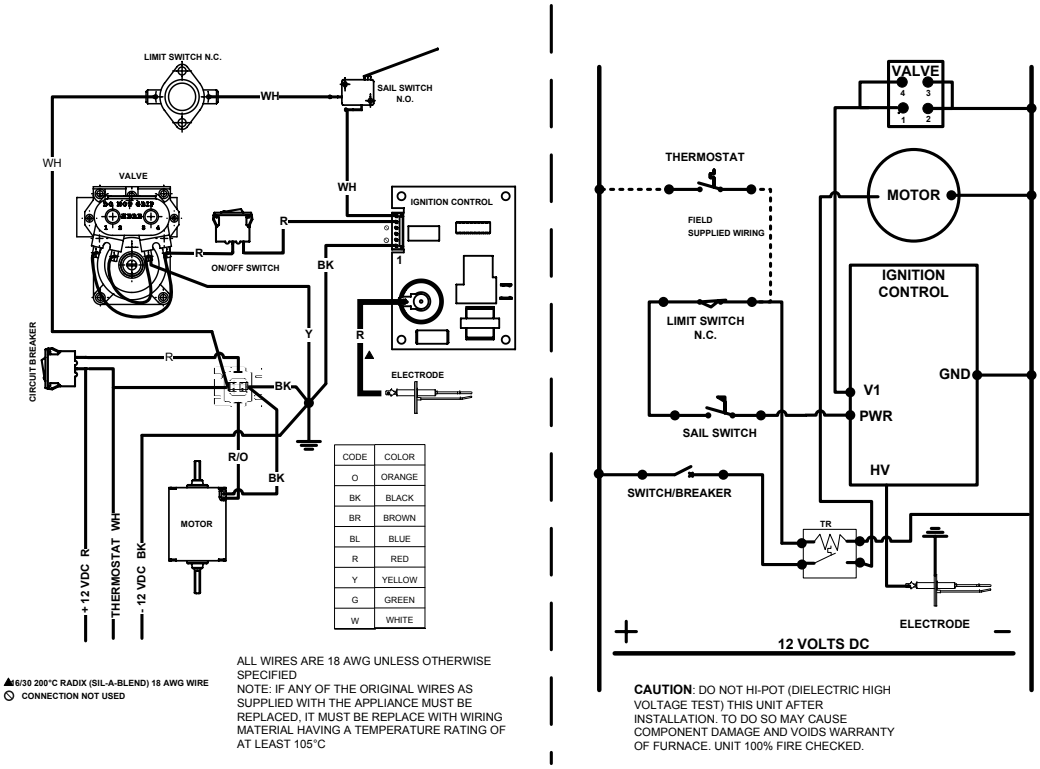

CODE	COLOR
O	ORANGE
BK	BLACK
BR	BROWN
BL	BLUE
R	RED
Y	YELLOW
G	GREEN
W	WHITE

▲6/30 200°C RADIX (SIL-A-BLEND) 18 AWG WIRE
⊘ CONNECTION NOT USED

ALL WIRES ARE 18 AWG UNLESS OTHERWISE SPECIFIED
NOTE: IF ANY OF THE ORIGINAL WIRES AS SUPPLIED WITH THE APPLIANCE MUST BE REPLACED, IT MUST BE REPLACE WITH WIRING MATERIAL HAVING A TEMPERATURE RATING OF AT LEAST 105°C

CAUTION: DO NOT HI-POT (DIELECTRIC HIGH VOLTAGE TEST) THIS UNIT AFTER INSTALLATION. TO DO SO MAY CAUSE COMPONENT DAMAGE AND VOIDS WARRANTY OF FURNACE. UNIT 100% FIRE CHECKED.

Figure 1 79/80-I Wiring Single Sense Blower Relay

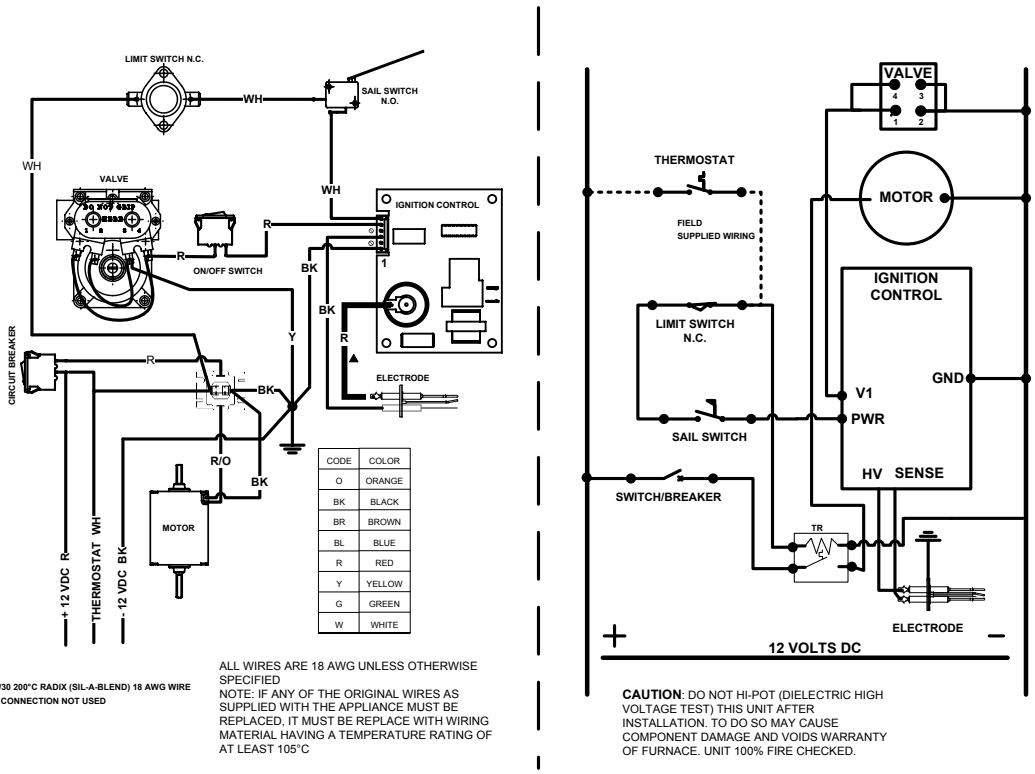

CODE	COLOR
O	ORANGE
BK	BLACK
BR	BROWN
BL	BLUE
R	RED
Y	YELLOW
G	GREEN
W	WHITE

▲6/30 200°C RADIX (SIL-A-BLEND) 18 AWG WIRE
⊘ CONNECTION NOT USED

ALL WIRES ARE 18 AWG UNLESS OTHERWISE SPECIFIED
NOTE: IF ANY OF THE ORIGINAL WIRES AS SUPPLIED WITH THE APPLIANCE MUST BE REPLACED, IT MUST BE REPLACE WITH WIRING MATERIAL HAVING A TEMPERATURE RATING OF AT LEAST 105°C

CAUTION: DO NOT HI-POT (DIELECTRIC HIGH VOLTAGE TEST) THIS UNIT AFTER INSTALLATION. TO DO SO MAY CAUSE COMPONENT DAMAGE AND VOIDS WARRANTY OF FURNACE. UNIT 100% FIRE CHECKED.

Figure 2 79/80-I Wiring Dual Sense Blower Relay

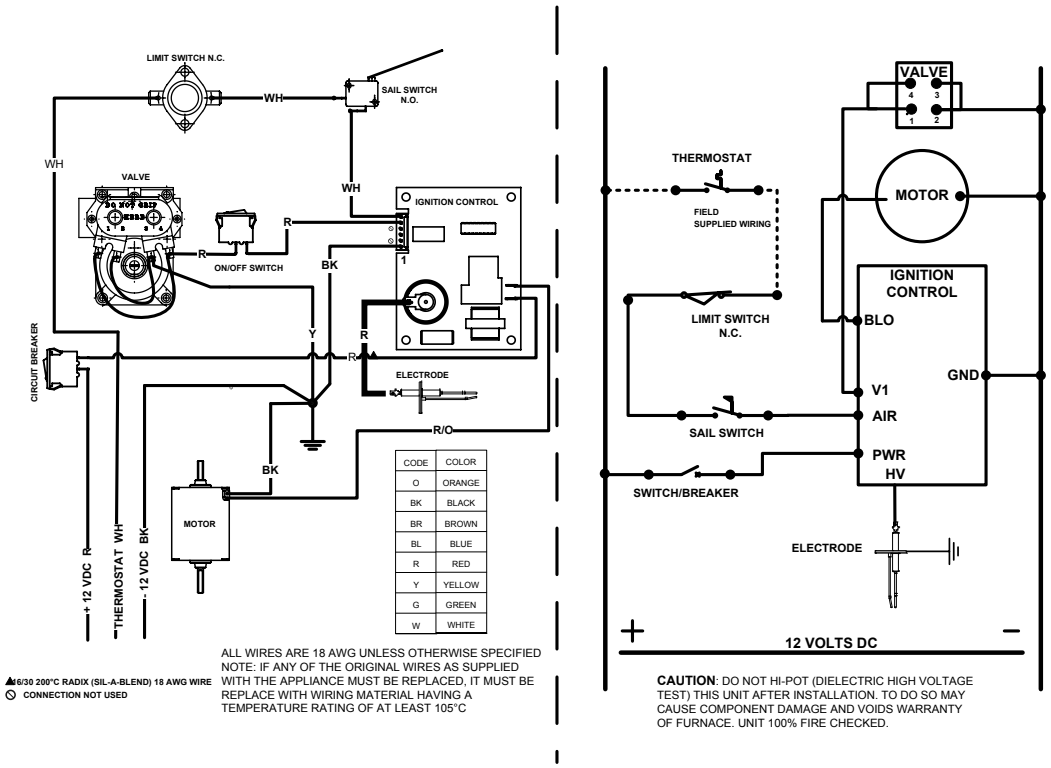

Figure 3 79/80-II Wiring Single Sense Blower Control

LOCAL SENSE BLOWER CONTROL IGNITION WIRING
Note: The ON/OFF switch, located in line with the gas valve, it is not used when a combination circuit breaker and ON/OFF switch is used.

8500 SERIES Model Identification

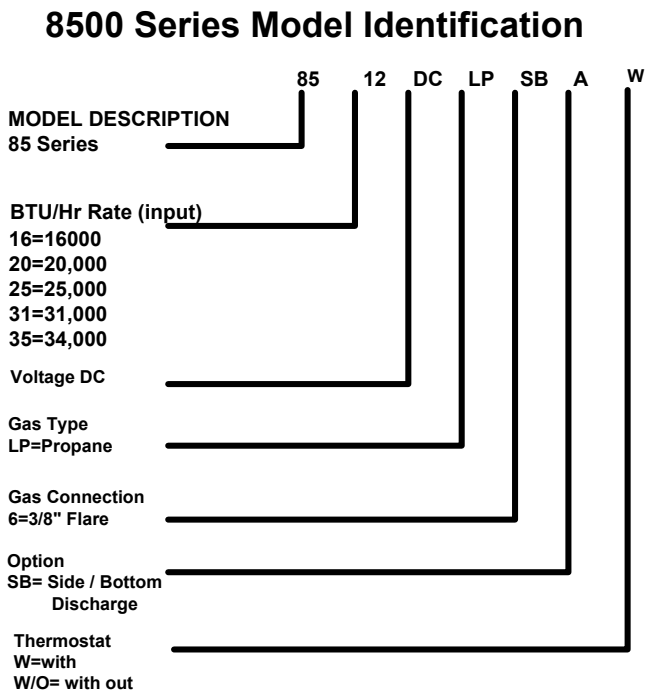

NOTE: The new 85-IV series furnace, through some design changes is quieter than the previous 85 series. It incorporates some plastic components in the blower housing area to accomplish this. These components are not retro-fit table to other 85 series furnaces.

Applications – This unit is typically installed in travel trailers, 5th wheels and motor homes.

Installation – This series of furnace can be installed either vertically or horizontally. If installed vertically, the exhaust port must be located at the bottom. Extra care must also be given in sealing this type of installation. Consult the installation manual for details.

Heat Outlets – This furnace can be bottom discharged to a hard duct system, soft ducted out the back to a discharge plate into a hard duct system or completely soft ducted from a combination of the eleven outlets located on both sides top and bottom and back of the furnace. Refer to the installation manual for the ducting requirements of the specific model of furnace.

Serviceability - This entire furnace is serviceable without removing it from the RV when installed with the outer door option. Therefore, there is no need to bench test it. All components are accessible by merely opening the access door. We strongly recommend trouble-shooting the furnace while it is installed in the RV.

Power Consumption - This furnace is designed to draw between 4.6 and 9.8 amps depending on the model of the furnace. Refer to the furnace specification decal when trouble-shooting its electrical system.

Wiring Diagrams 8500 Models

IMPORTANT

If any original wire has to be replaced, it must be replaced with type 105°C or its equivalent. Note: Wire colors may be different then original wiring.

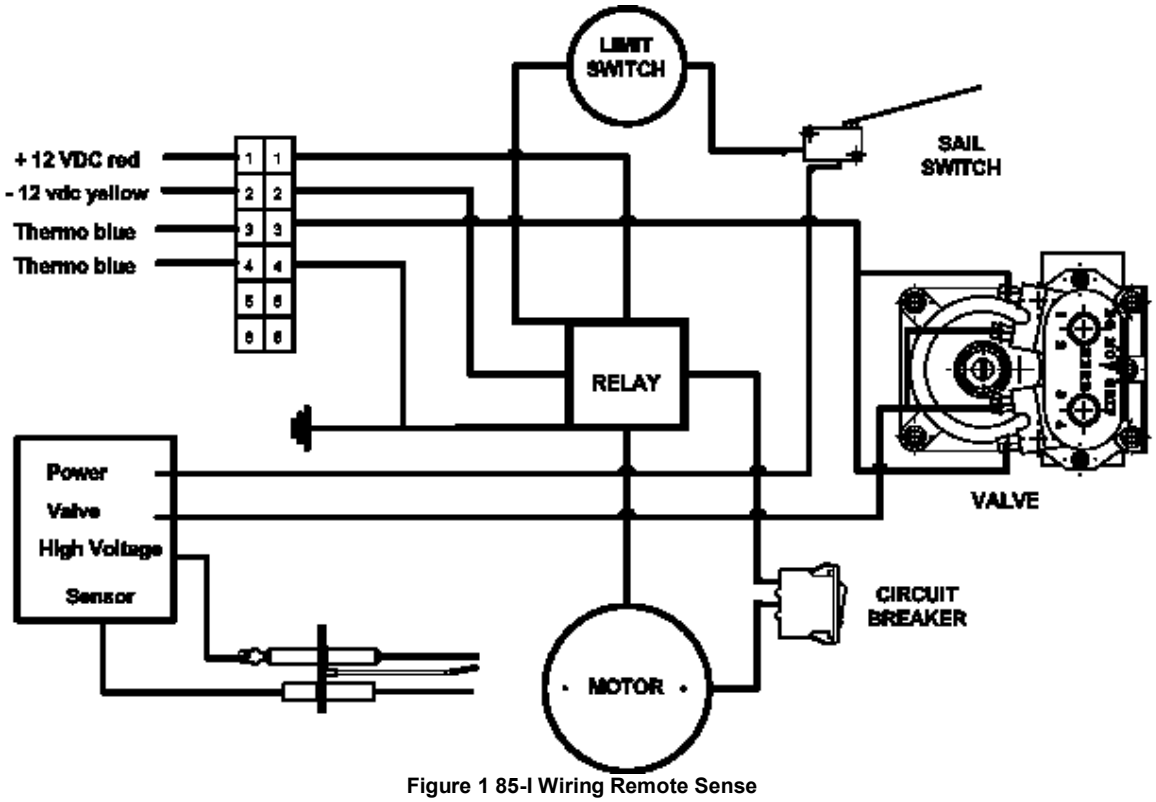

Figure 1 85-I Wiring Remote Sense

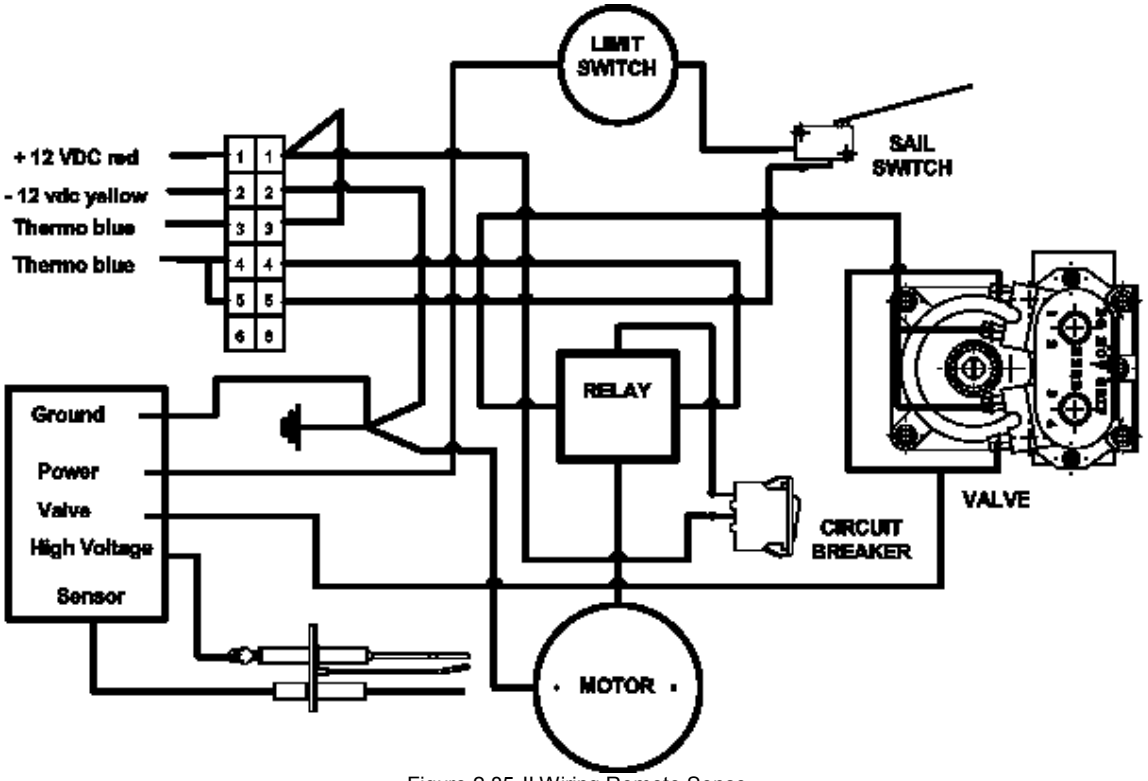

Figure 2 85-II Wiring Remote Sense

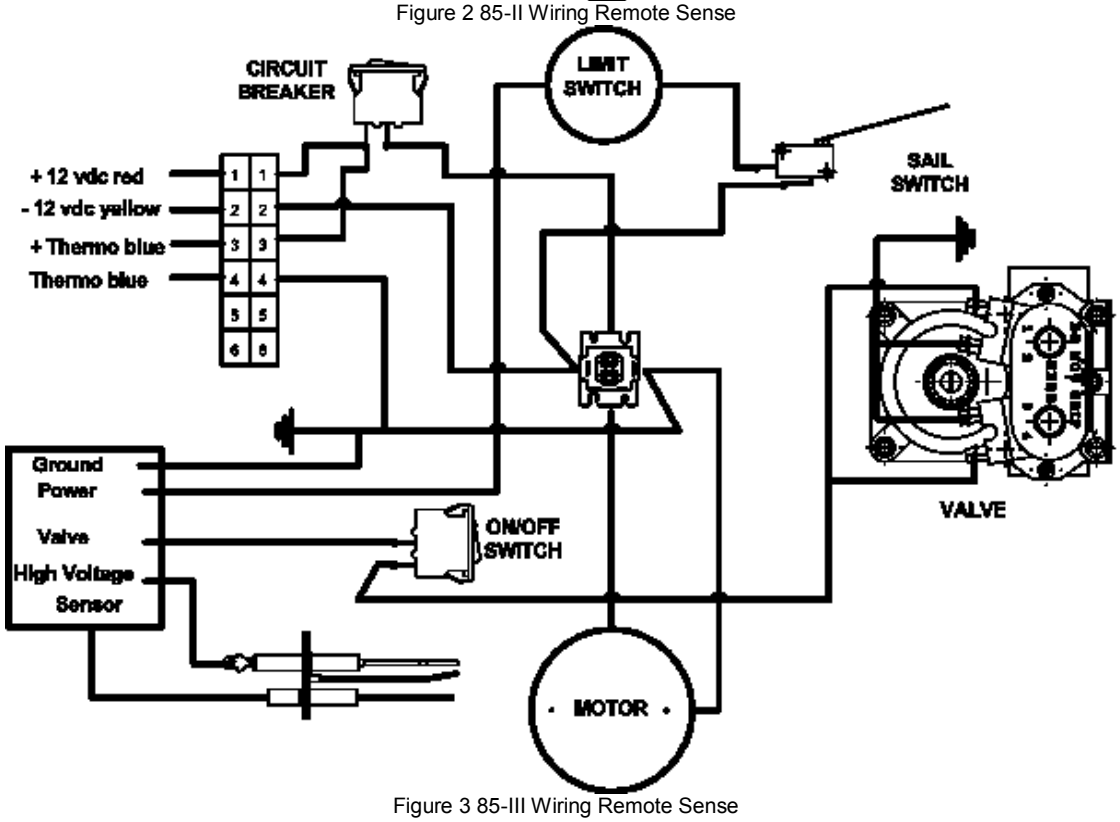

Figure 3 85-III Wiring Remote Sense

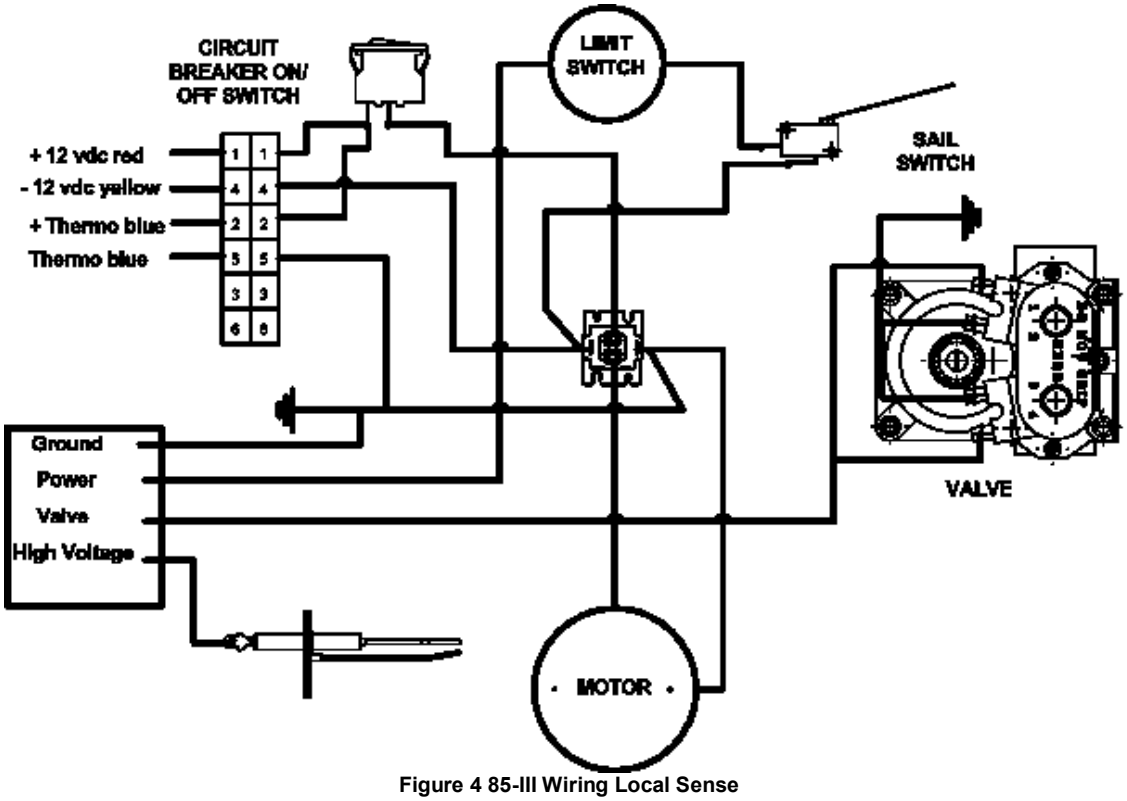

Figure 4 85-III Wiring Local Sense

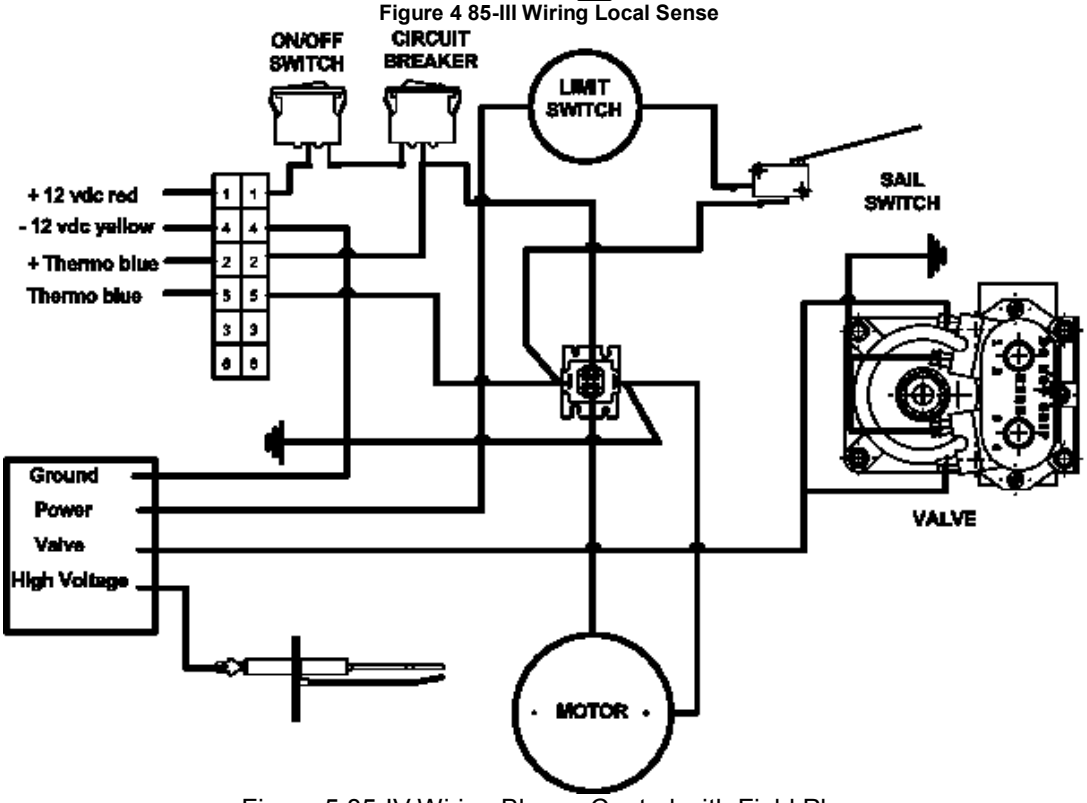

Figure 5 85-IV Wiring Blower Control with Field Plug

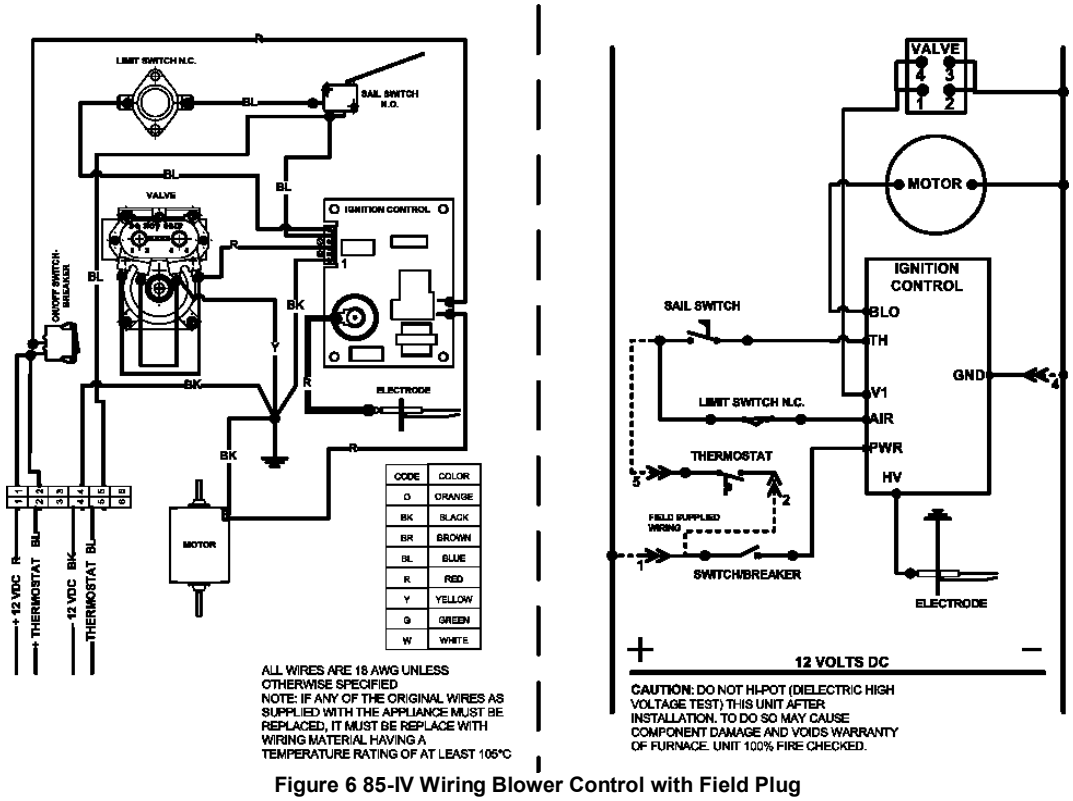

Figure 6 85-IV Wiring Blower Control with Field Plug

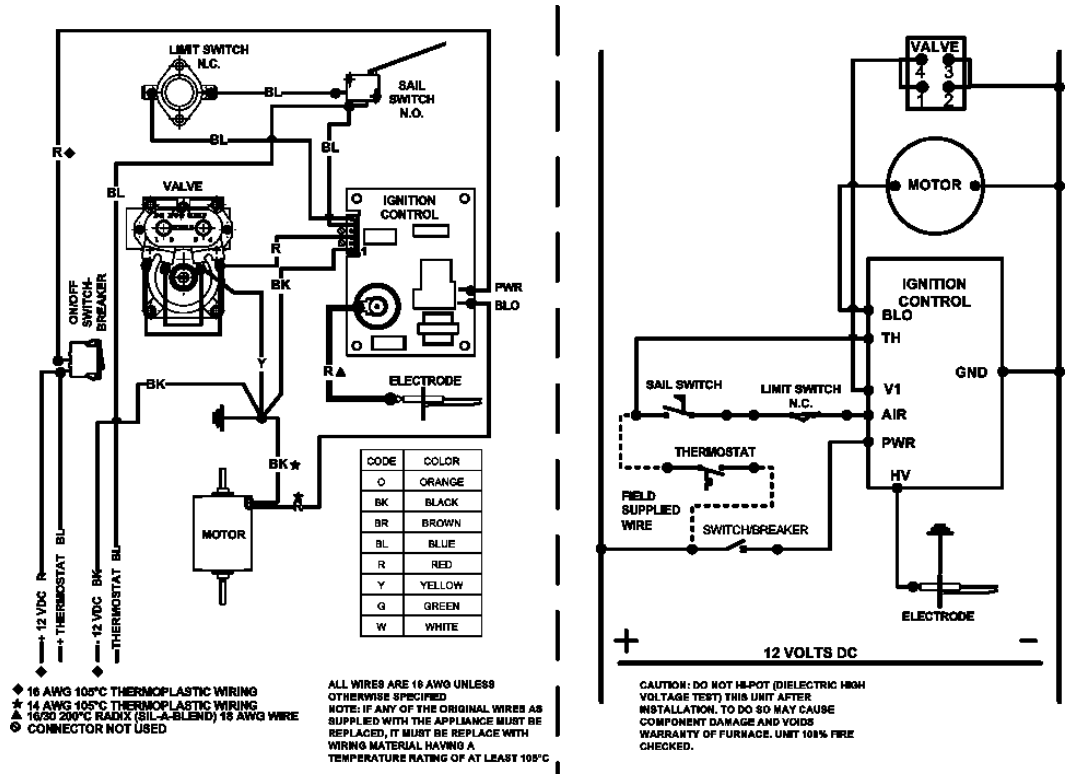

Figure 7 85-IV Wiring Blower Control without Field Plug

8900 Series Model Identification

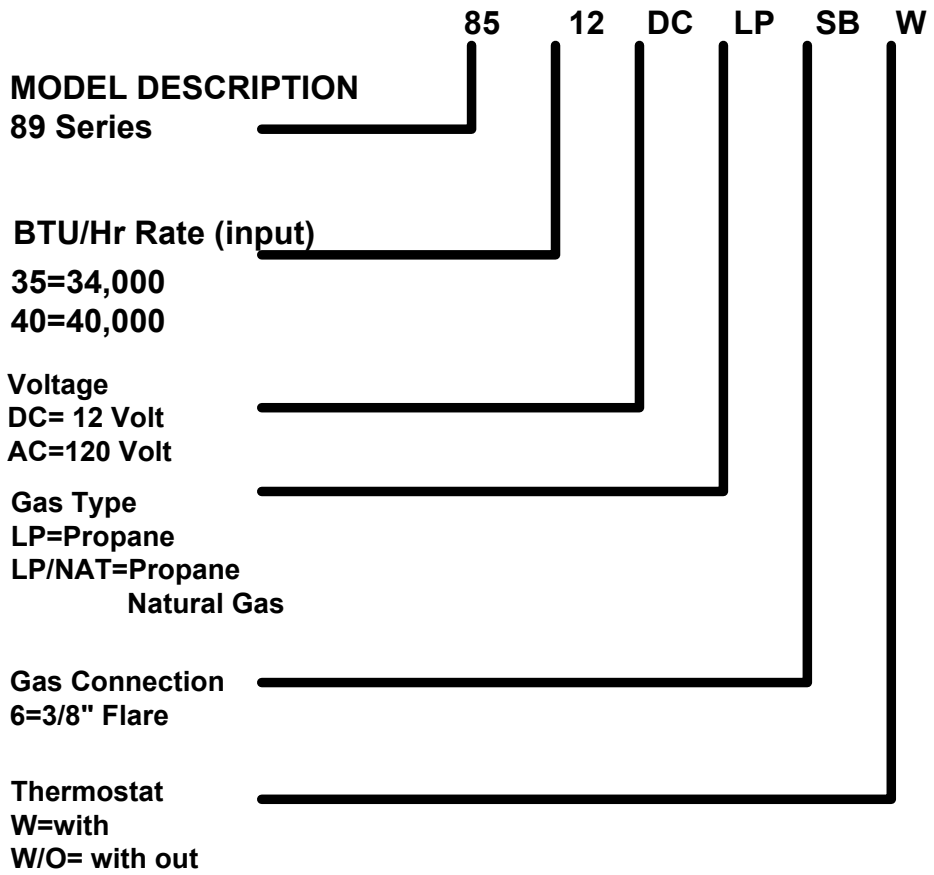

Applications – This unit is typically installed in travel trailers, 5th wheels and motor homes.

Installation – This series of furnace can be installed either vertically or horizontally (there is only one vertical installation option with use only with specific flexible ducting locations). If installed vertically, the exhaust port must be located at the bottom. Extra care must also be given in sealing this type of installation. Consult the installation manual for details.

Heat Outlets – This furnace can be bottom discharged to a hard duct system, soft ducted out the back to a discharge plate into a hard duct system or completely soft ducted from a combination of the six outlets located on both sides and back of the furnace. Refer to the installation manual for the ducting requirements of the specific model of furnace.

Serviceability - This entire furnace is serviceable without removing it from the RV when installed with the outer door option. Therefore, there is no need to bench test it. All components are accessible by merely opening the access door. We strongly recommend trouble-shooting the furnace while it is installed in the RV.

Power Consumption – The DC furnace is designed to draw 11.0 amps and the AC model draws 3.2 amps. Refer to the furnace specification decal when trouble-shooting its electrical system.

Wiring Diagrams 8900 Models

IMPORTANT

If any original wire has to be replaced, it must be replaced with type 105°C or its equivalent. Note: Wire colors may be different then original wiring.

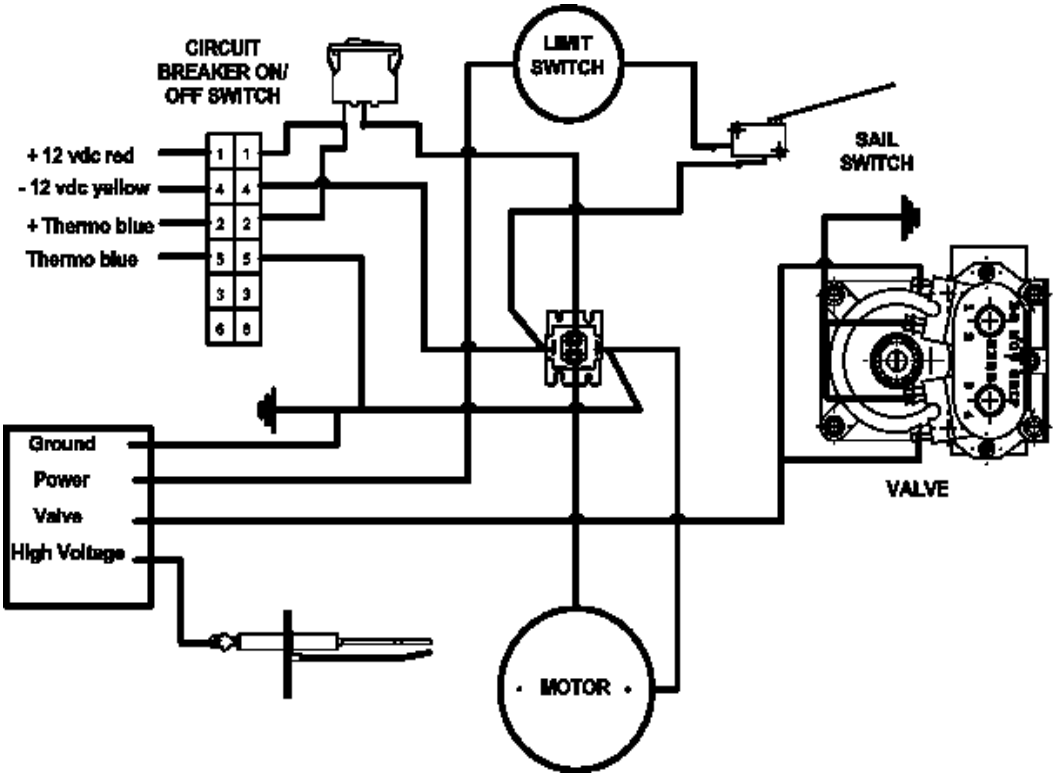

Fig 1 89-II DC Wiring Local Sense

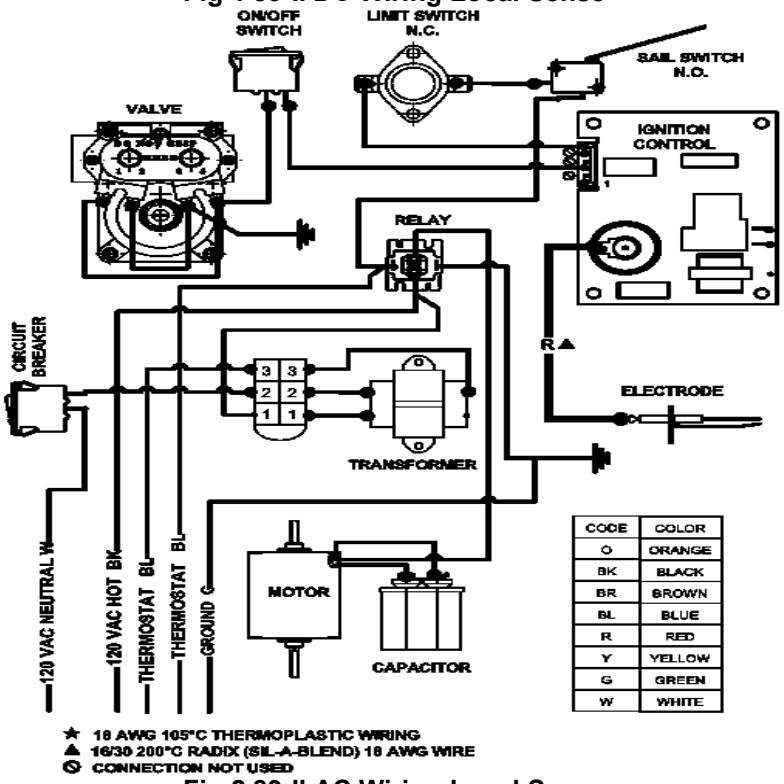

Fig 2 89-II AC Wiring Local Sense

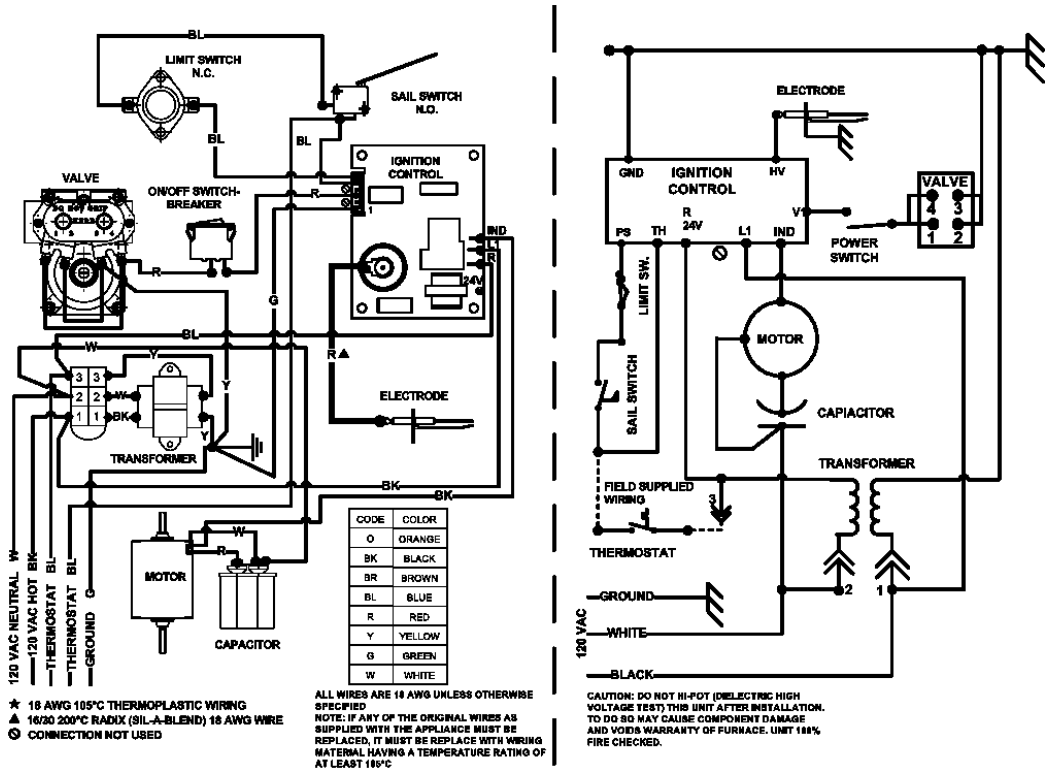

Fig 3 89-III AC Wiring Local Sense

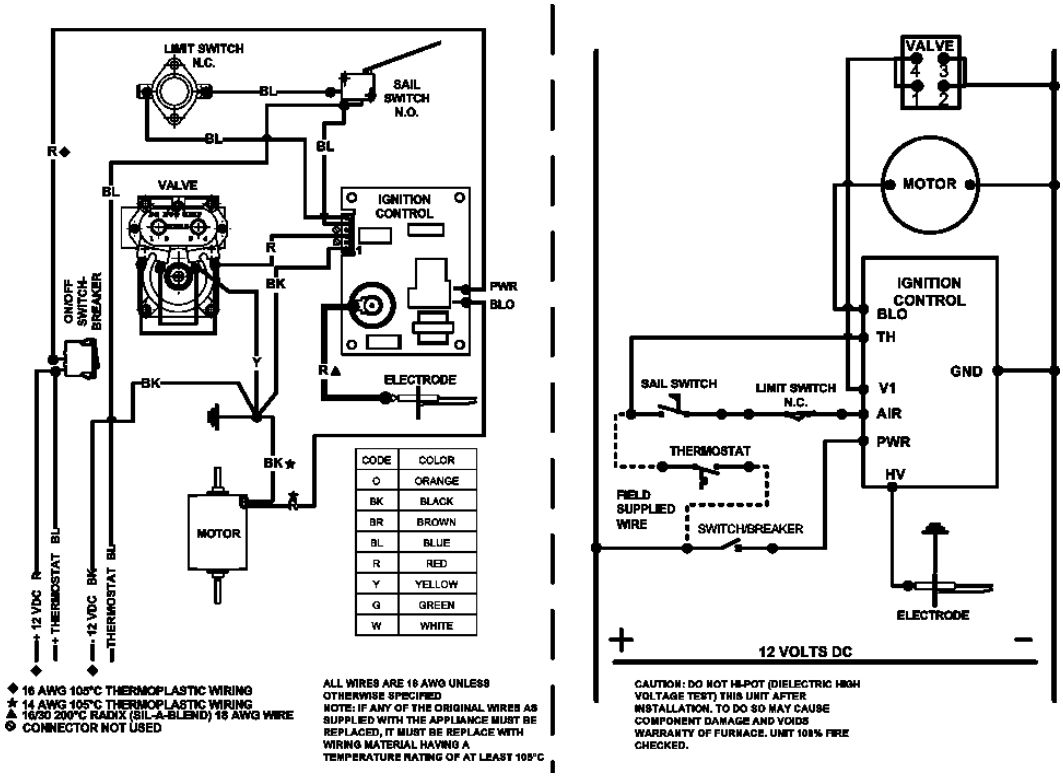

Fig 4 89-III DC Wiring Local Sense

85 / 89 2-Stage SERIES Model Identification

85 / 89 Series Two Stage Model Identification

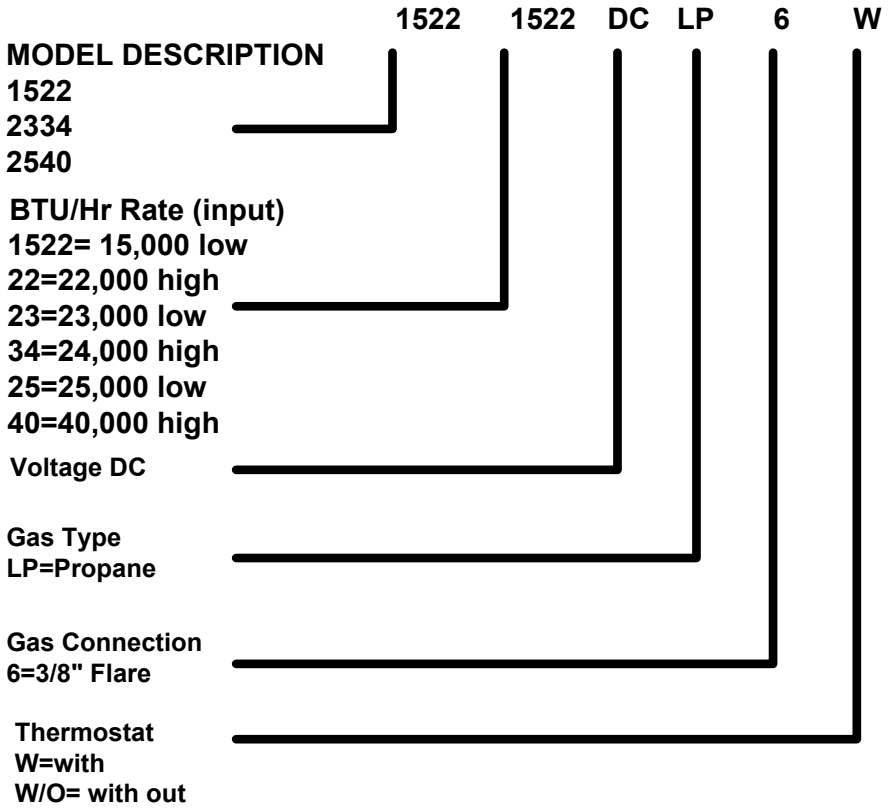

Applications – This unit is typically installed in travel trailers, 5th wheels and motor homes.

Installation – This series of furnace can be installed either vertically or horizontally (8900 series has only one model 2540 that can be vertical installation with only specific flexible ducting locations). If installed vertically, the exhaust port must be located at the bottom. Extra care must also be given in sealing this type of installation. Consult the installation manual for details.

Heat Outlets – This furnace can be bottom discharged to a hard duct system, soft ducted out the back to a discharge plate into a hard duct system or completely soft ducted from a combination of the six (8900) or eleven (8500) outlets located on the specific furnace casing of the furnace. Refer to the installation manual for the ducting requirements of the specific model of furnace.

Serviceability - This entire furnace is serviceable without removing it from the RV when installed with the outer door option. Therefore, there is no need to bench test it. All components are accessible by merely opening the access door. We strongly recommend trouble-shooting the furnace while it is installed in the RV.

Power Consumption – The DC furnace is designed to draw s 10.0 to 16.0 amps and the AC model draws 3.4 amps. Refer to the furnace specification decal when trouble-shooting electrical systems.

Wiring Diagrams 2-Stage Models

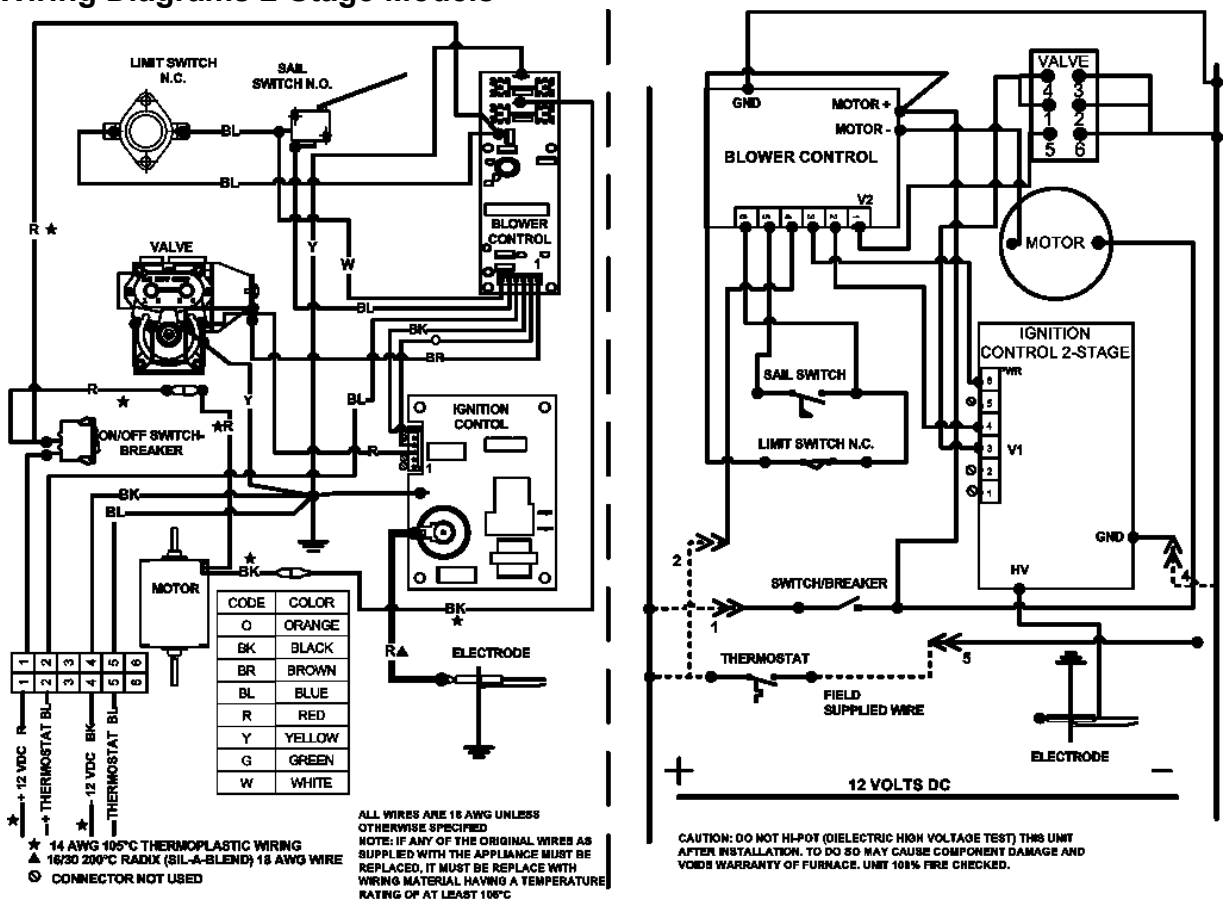

Fig 1 2-STAGE with Field Plug

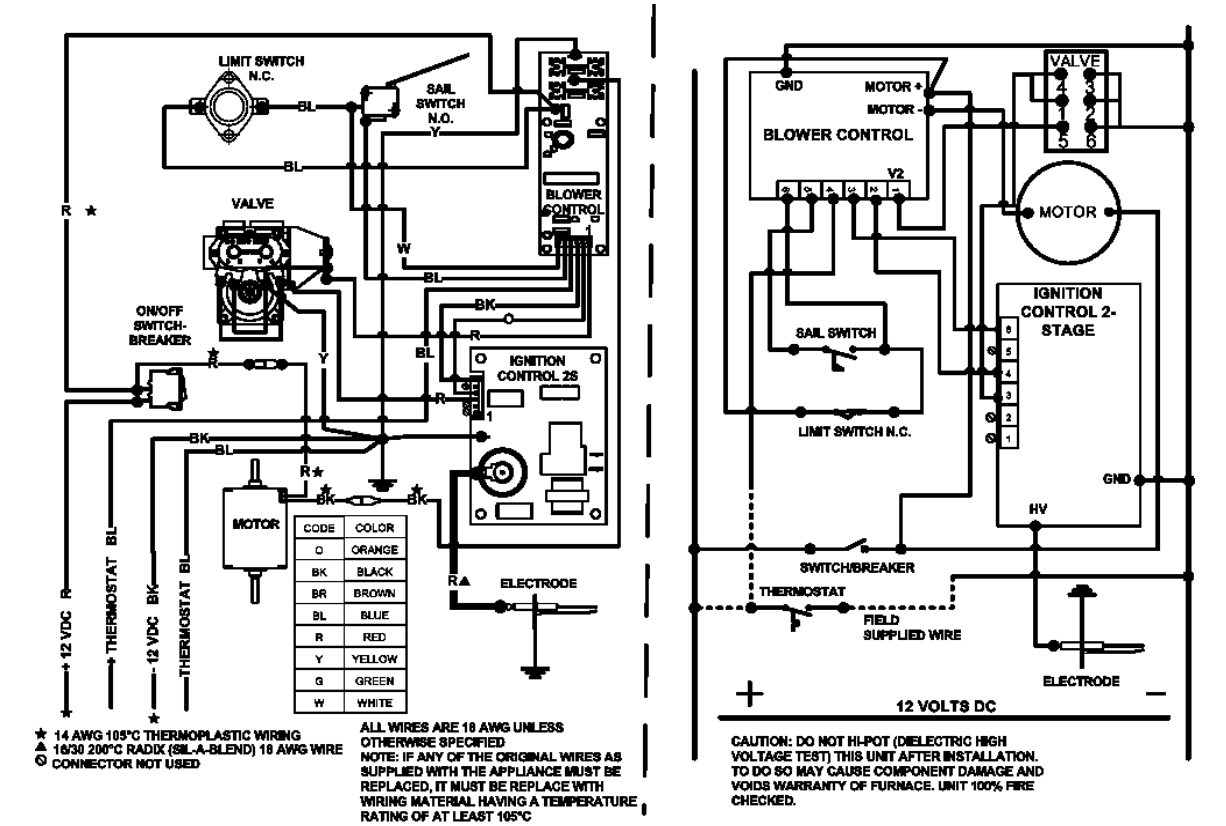

Fig 2 2-STAGE without Field Plug

Model HFH 2000 Bi Metal Thermostat

⚠ WARNING
PRODUCT DAMAGE

- Disconnect electricity to the appliance before installation or service. Reconnect then through.
- DO NOT short control terminals at appliance t test system. The room thermostat will be damaged
- DO NOT locate thermostat in a humid area. The life expectancy will be reduced.
- Wiring must conform to local codes and ordinances.
- When appliances have time delay controls the system operation will lag behind the thermostat call for heat.

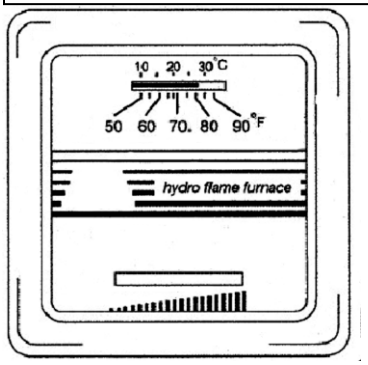

DESCRIPTION
The HFH-2000 Room Thermostat controls a gas heating system. It senses the room temperature and automatically opens or closes the ignition circuit to the valve or a relay in a heating appliance.

There are two main assemblies, a cover and a base. The cover has a decorative face and comes with a thermometer. The temperature scales are Fahrenheit and Celsius. There are four internal ribs which fit into guides in the base for centering and holding the cover to the base.

The base mounts to the wall with two #6 screws. Leveling is not required for the unit to function. The system wiring is connected to the thermostat with two screws provided on the back of the base. On the base face side is located the bimetal coil, a magnet, contacts, adjustable anticipator, a temperature setting lever and an “OFF” switch. The thermostat can be adjusted for more even heat; the thermostat heat anticipator can be set. The lever at the base of the thermostat is used to set the temperature to the desired comfort level. Starting from the left side with the coolest setting and increasing temperature setting as you move to the right as indicated by the increase in bar height shown on the thermostat cover.

SPECIFICATION – MODEL 1H1C

Color – White	Part No. 38453
Color – Brown	Part No. 38452
Electrical Rating	24 VAC volt nominal (30 VAC 1.0 AMP maximum 12 VDC nominal
Application	Two wire heating only
Anticipation	0.1 to 1.0 AMP adjustable
Temperature range	50°F to 90°F, 10°C to 30°C
Temperature differential	4°F, 2°C
Size	3” X 3-1/8” X 1-1/2” approximately

INSTALLATION & OPERATION

For accurate temperature control and comfort, correct location is very important.

New Installation – Thermostat Location

- Locate the thermostat on an inside wall about 48” – 54” above the floor, where it is easy to install and adjust it should be in a room that is used often, such as a living room.
- DO NOT install the thermostat where there are unusual heating conditions such as direct sunlight, close to a lamp, radio, television, radiator, register, near a fireplace or other heat producing appliance.
- DO NOT locate in unusual cooling conditions, such as on the outside wall, or one separating an unheated room, or in drafts from stairwells doors or windows.
- DO NOT locate in a damp or humid area. This can shorten thermostat life due to corrosion.
- DO NOT locate where air circulation is poor, such as in a corner, alcove or behind an open door.
- DO NOT install unit until all construction work and painting have been completed.

Replacement Installation – Thermostat Location
When replacing an old thermostat, install the new one in the same location unless the above conditions suggest are otherwise.

⚠ WARNING MERCURY – HAZARDOUS WASTE
Some old thermostat may contain mercury. Handle with care. Dispose of properly.

Tools required
Wire stripper or knife, drill with 1/16” bit, screwdriver, level and a pencil.

Removing Old Thermostat
Please read all instruction carefully.

1. Disconnect electricity and turn off gas to the heater.
2. Remove cover from old thermostat.
3. Loosen all screws on the old thermostat and remove it from the wall.
4. Make note of wires and to which terminals they are attached as you disconnect them. For example: “yellow wire to terminal “Y”. Red wire to terminal “RH”, etc.
5. Strip insulation 3/8” from wire ends and clean off any corrosion.
6. Fill wall opening with non-combustible insulation to prevent drafts from affecting thermostat.

Installing New Thermostat
1. Remove front cover of new thermostat by inserting a finger in the side of the thermostat and gently prying away each corner. Remove base. Fig. 1 from cover.
2. Place base, FIG. 2 on wall over wall opening. Mark wall with a pencil at mounting holes as shown in FIG. 2.
3. Drill two holes with 1/16” bit, 1/4” deep.
4. Bring wires up to back side of thermostat base and attach while wire to terminal marked “W” and red wire to terminal marked “R” as shown in FIG. 2
5. Fasten loosely to wall using two mounting screws. Place a level against the bottom of the base, adjust unit until it is level and then tighten mounting screws to screws to secure.
6. Find anticipator setting on old thermostat. Setting on new thermostat should be the same. Do this by carefully sliding the long pointer, FIG 1, over desired number printed on the anticipator. If old anticipator setting cannot be determined, look on the gas control on the furnace, or set at .5. During heating season, furnace should operate about five times an hour. If adjustments are necessary, move heat anticipator pointer slightly and recheck. NOTE: Set pointer to 1.2 for mill volts systems.
7. Attach front cover to base.
8. Turn electricity and gas on and set pointer to on bottom of thermostat to mid-point and adjust for setting to desired comfort level.

Thermostat can only control temperature near it. If you find that it is uncomfortable some distance away from the thermostat, change the setting in order to compensate for this.

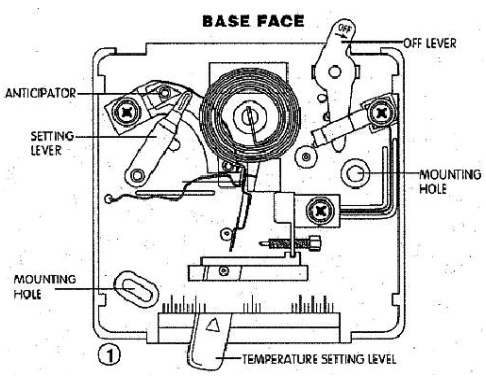

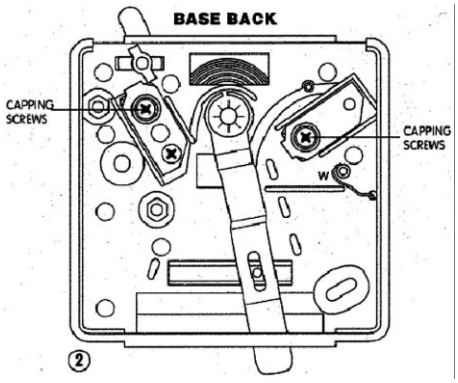

DIGITAL THERMOSTAT MODEL 1H2C

This thermostat has been designed to operate standard air conditioning units in conjunction with a RV furnace.

Specifications

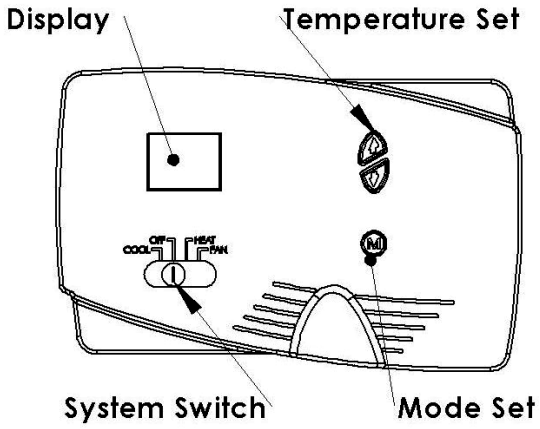

SLIDE SWITCH				SCROLL ORDER OF DISPLAYED MODES			OPERATING
LEFT		RIGHT					
COOL	OFF	HEAT	FAN				Furnace Operation
		•		HI			Furnace cycles to satisfy set point.
COOL	OFF	HEAT	FAN				Air Conditioner Operation
•				AU			Air conditioner automatically switches compressor and high and low speed fan when cycling to satisfy set point.
•					HI		Air conditioner compressor and high speed fan cycle to satisfy set point.
•						LO	Air conditioner compressor and low speed fan cycle to satisfy set point.
COOL	OFF	HEAT	FAN				Fan Operation
			•		HI		Air conditioner fan runs at high speed to circulate air.
			•			LO	Air conditioner fan runs at low speed to circulate air.
COOL	OFF	HEAT	FAN				Off
	•			OF			No operation occurs.

Specifications……..

Operating Voltage	**9 VDC to 18 VDC**
Current Consumption at 12 VDC	**100mA**
Operating Temperature	**-40°F to +180°F**
Room Temperature Range	**+55°F to +90°F**
Room Temperature Display Range	**+35°F to +99°F**
Thermostat Accuracy	**+/- 1°F**
Switching Capability A/C	**Up to 24 VAC (max. 2 amps)**

Thermostat Installation

1. Thermostat is very sensitive. HANDLE WITH CARE AT ALL TIMES.
2. Locate thermostat 48” to 54” above main floor level on an INTERIOR wall. Pick a dry area where air circulation is good. EXTERIOR wall location must have a ¾” spacer between thermostat and exterior wall.

3. Be sure all electrical power has been disconnected from the air conditioner, furnace and the power supply.
4. Do not install the thermostat where there are unusual heating conditions: such as direct sunlight, heat producing appliances (television, radio, wall lamp, etc.) or a furnace or air conditioner supply register.

ATTACHING THE WALL THERMOSTAT

5. Separate the thermostat body from the sub-base by gently squeezing the top and bottom, connecting wiring per requirements. Attach thermostat sub-base to the wall at desired mounting location.

WIRING REQUIREMENTS FOR THERMOSTAT

12 VDC ANALOG A/C SYSTEMS (RVP®)		
THERMOSTAT TERMINAL # (L-R)	**WIRE FROM FURNACE FUNCTION**	**WIRE FROM A/C FUNCTION**
1	-12 Vdc ground	
2	Not Used	Not used
3 & 4 use jumper	+12 Vdc	
5		A/C Compressor
6		High Fan
7		Low Fan
8	Furnace Control	

7.5 VDC ANALOG A/C SYSTEMS (DOMETIC®)		
THERMOSTAT TERMINAL # (L-R)	**WIRE FROM FURNACE FUNCTION**	**WIRE FROM A/C FUNCTION**
1	-12 Vdc ground	
2	Not Used	
3	+12 Vdc	
4		7.5 Vdc
5		A/C Compressor
6		High Fan
7		Low Fan
8	Furnace Thermostat	

DIGITAL THERMOSTAT MODEL 2H2C Two Stage

This thermostat has been designed to operate standard air conditioning units in conjunction with an Two Stage RV furnace.

Specifications

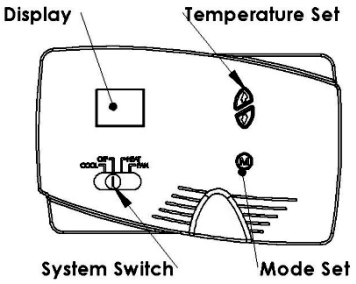

Operating Voltage	**9 VDC to 18 VDC**
Current Consumption at 12 VDC	**100mA**
Operating Temperature	**-40°F to +185°F**
Room Temperature Range	**+55°F to +90°F**
Room Temperature Display Range	**+35°F to +99°F**
Thermostat Accuracy	**+/- 1°F**
Switching Capability A/C	**Up to 24 VAC (max. 2 amps)**

Thermostat Installation

1. Thermostat is very sensitive. HANDLE WITH CARE AT ALL TIMES.
2. Locate thermostat 48” to 54” above main floor level on an INTERIOR wall. Pick a dry area where air circulation is good. EXTERIOR wall location must have a ¾” spacer between thermostat and exterior wall.
3. Be sure all electrical power has been disconnected from the air conditioner, furnace and the power supply.
4. Do not install the thermostat where there are unusual heating conditions: such as direct sunlight, heat producing appliances (television, radio, wall lamp, etc.) or a furnace or air conditioner supply register.

ATTACHING THE WALL THERMOSTAT

1. Separate the thermostat body from the sub-base by gently squeezing the top and bottom, connecting wiring per requirements. Attach thermostat sub-base to the wall at desired mounting location.

SYSTEM SLIDE SWITCH				Scroll Order Of Displayed Modes					OPERATIONS
LEFT		RIGHT							
COOL	OFF	HEAT	FAN						**Furnace Operations**
		•		AU					Furnace automatically switches between high and low BTU valve and high and low speed fan when cycling to satisfy set point.
		•			HI				Furnace high BTU valve and low speed furnace fan cycle to satisfy set point.
		•				LO			Furnace low BTU valve and low speed furnace fan cycle to satisfy set point.
		•					HF		Furnace fan runs at high speed to circulate air. Air conditioner fan does not run.
		•						LF	Furnace fan runs at low speed to circulate air. Air conditioner fan does not run.
COOL	**OFF**	**HEAT**	**FAN**	**Scroll Order Of Displayed Modes**					**Air Conditioner Operation**
•				AU					Air conditioner automatically switches compressor and high and low speed fan when cycling to satisfy set point.
•					HI				Air conditioner compressor and high speed fan operate to satisfy set point.
•						LO			Air conditioner compressor and low speed fan operate to satisfy set point.
•							HF		Air conditioner fan runs at high speed to circulate air. Furnace fan does not run.
•								LF	Air conditioner fan runs at low speed to circulate air. Furnace fan does not run.
COOL	**OFF**	**HEAT**	**FAN**	**Scroll Order Of Displayed Modes**					**Fan Operation**
			•		HI				Air conditioner fan and furnace fan run at high speed to circulate air.
			•			LO			Air conditioner fan and furnace fan run at low speed to circulate air.
COOL	**OFF**	**HEAT**	**FAN**	**Scroll Order Of Displayed Modes**					**OFF**
•				OF					

WIRING REQUIREMENTS FOR TWO STAGE THERMOSTAT

12 VDC ANALOG A/C SYSTEMS (RVP®)		
THERMOSTAT terminal # (L-R)	**WIRE FROM FURNACE FUNCTION**	**WIRE FROM A/C FUNCTION**
1	-12 Vdc ground	
2	Not Used	Not Used
3 use jumper between 3 & 4	+12 Vdc	
4		
5		A/C Compressor
6		High Fan
7		Low Fan
8	Furnace Thermostat	

7.5 VDC ANALOG A/C SYSTEMS (DOMETIC®)		
THERMOSTAT TERMINAL # (L-R)	**WIRE FROM FURNACE FUNCTION**	**WIRE FROM A/C FUNCTION**
1	-12 Vdc ground	
2	Not Used	
3	+12 Vdc	
4		7.5 Vdc
5		A/C Compressor
6		High Fan
7		Low Fan
8	Furnace Thermostat	

Sequence of Operation – DC Models (Standard Units)

The ON/OFF switch allows power to pass to the circuit breaker and the thermostat.

↓

The thermostat controls the operating circuit to the furnace by reacting to room temperature. When room temperature is below the thermostat set point, the contact closes to allow current to flow to the **relay (relay can be either external or part of the ignition control board).**

↓

The circuit breaker limits amperage draw of motor.

↓

The relay allow current to pass to the motor by closing a switch within the relay. Voltage from the thermostat activates the relay to turn the fan on. This takes 1-25 seconds **(on units with relay on the ignition control board there is only a 1-2 second delay)**.

↓

Current flows to the motor to operate the blower. One end of the motor shaft is for the circulating air wheel and the other side is for the combustion air wheel.

↓

Circulating air blows against the sail switch and closes the contacts, completing the circuit. The sail switch is a safety device that insures air flow before ignition.

↓

The limit switch is a safety device that protects the furnace from overheating. The contacts in the limit switch open at a given temperature setting, shutting off power to the electronic ignition system that controls the gas valve.

↓

As power is applied to the circuit board, the system closes the following:

1. A timing circuit allows the blower to purge the chamber (15-17 seconds).
2. The board supplies current to the gas valve and causes it to open.
3. As the valve opens, the board sends a high voltage spark to the electrode at the burner. The board detects the presence of a flame. If the flame is not sensed after approximately six seconds, the board will lock out (after three tries for ignition, the control will lockout for one hour unless power is removed or thermostat is cycled).shutting off power will restart the cycle.
4. If the system does not ignite and the thermostat remains closed, the blower will remain on until the thermostat is reset manually on units with an external relay **(units with the relay on the ignition control will shut the blower off even if the thermostat contacts remain closed)**. If the thermostat is has not be satisfied within one hour the system will try the ignition cycle again.

↓

When the thermostat senses the desired room air temperature contact open, removing power from the ignition system and shutting off the gas valve. The blower runs until the relay opens (90 seconds) the circuit shutting off current to the motor.

On newer control a diagnostic error code light has been added by counting the flashes an error code can be determined. See diagnostic information for code failures.

⚠ WARNING

FURNACE PRODUCES HIGH TEMPERATURE

- Locate furnace out of traffic and away from furniture and draperies.
- Do not touch or put combustibles near appliance. Hot surface temperature may occur.
- Supervise young children in the same room as the furnace
- Do not place clothing or flammable materials on or near the furnace.

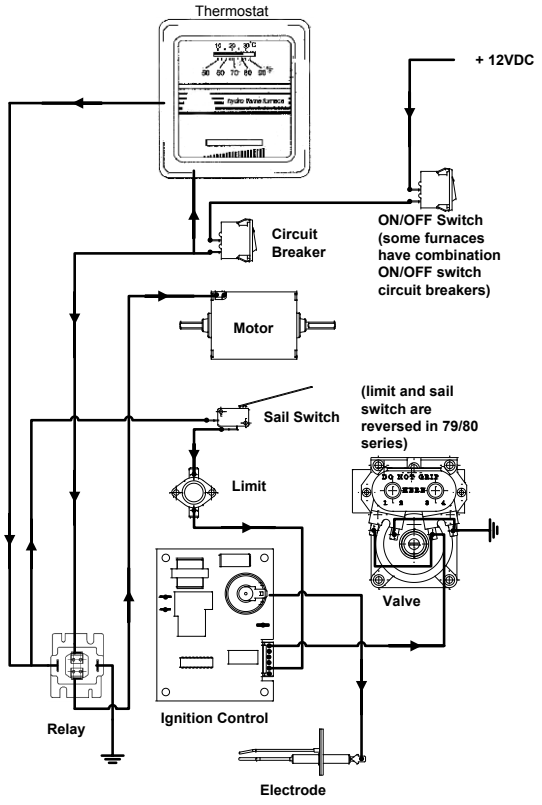

Number of Flashes	Diagnostic Information
1 w/ 3 sec. pause	Air Flow / Limit Fault
2 w/ 3 sec. pause	Flame Sense Fault
3 w/ 3 sec. pause	Ignition Lockout Fault

Steady ON no Flashing	Internal Control Failure

Sequence of Operation – DC Models (2- Stage Excalibur™ Furnaces ONLY)

The digital thermostat controls the operating circuit to the furnace by reacting to room temperature. When the room temperature is below the thermostat set point by 2°F a heat demand signal will be sent to the controller module).

↓

The ON/OFF switch is an agency safety power shut off to the furnace ignition and gas valve systems.

↓

The circuit breaker limits amperage draw of the motor.

↓

Current flow to the controller module and during the first seconds the micro-processor confirms inputs and verifies correct operation of safety redundancies. This module will perform the following diagnostic checks of the system.

a. Sail Switch is open
b. Internal Microprocessor faults
c. Voltage inputs
d. Ignition
e. Open Limit Switch

In the event of a failure, an LED on the controller module will flash a code. On newer control a diagnostic error code light has been added by counting the flashes an error code can be determined. See diagnostic information for code failures.

↓

The motor receives current from the controller module and will run at high speed or low speed depending on the demand signal the digital thermostat sends to the controller module. One end of the motor shaft is for the circulating air wheel and the other end is for the combustion air wheel.

↓

Circulating air blows against the sail switch and closes the contacts, completing the circuit. The sail switch is a safety device that insures air flow before ignition.

↓

The limit switch is a safety device that protects the furnace from overheating, the contacts in the limit switch open at a given temperature setting, shutting off power. This activates the open limit switch diagnostics and the LED on the controller module flash shutting down the gas valve. See Chart.

↓

As power is applied to the circuit board, the system does the following:

a. Timing circuits allow the blower to purge the heat chamber for 15 seconds.
b. When current is supplied to the gas valve it opens to high burn stage. (The controller module activates the low burn operation on the valve.)
c. As the valve opens, the ignition module sends a high voltage spark to the electrode at the burner. The ignition module detects the presence of a flame. If the flame is not sensed after 7 seconds of sparking a signal is sent to the controller module that there is no ignition and shuts off the valve. After another 24 second purge, it will try again. After a third try, the controller will go into "soft" lockout, timing for one hour and the diagnostic LED will flash a code, See Chart. After the timed hour, the controller will initiate (3) more tries for ignition. If there is no ignition, the timing sequence begins again.
d. If the system does not ignite and the thermostat is still calling for a heat demand, the blower will for 90 seconds as a post purge then shut off.

↓

When the thermostat senses the desired room air temperature, a signal is sent to the controller module to shut down operation of the gas valve and run the blower for 90 seconds as a post purge of heat from the furnace heat chamber.

Two-Stage operation in automatic mode, when temperature is within 1°F of the set point of thermostat the furnace will start in low fire mode. If temperature is above 1°F of the set point of thermostat the furnace will start in high fire mode. Thermostat can also be set to manual for either high or low modes this will not allow the unit to switch automatically with temperature changes.

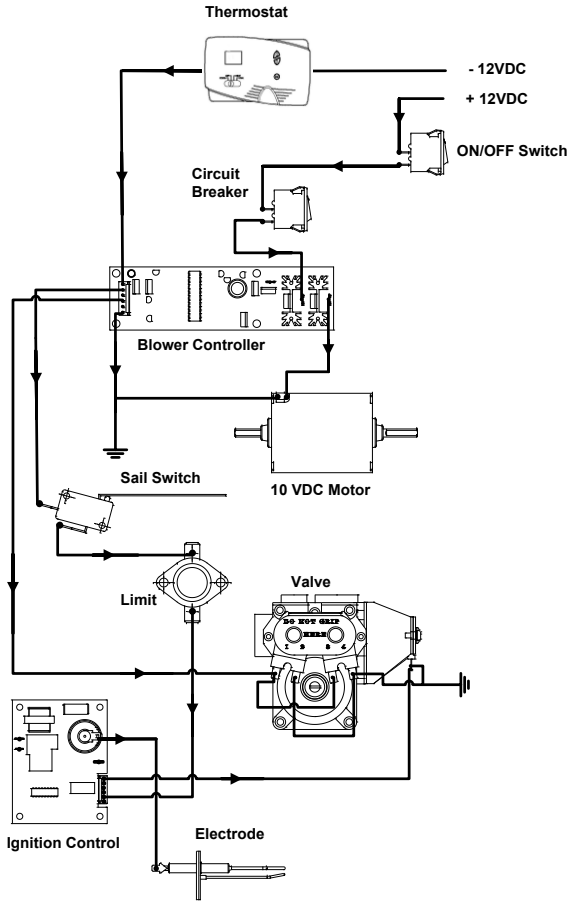

Number of Flashes	Diagnostic Information
1	Low Input Voltage
2	Ignition Failure
3	Open High Limit
4	Stuck APS (sail switch)
5	Module Fault

Sequence of Operation – Pilot Models

The thermostat controls the operating circuit to the furnace by reacting to room temperature to open and close a set of contact points which allow current to flow to the relay.

↓

The relay receives the current and allows current to pass through to the circuit breaker by closing a switch within the relay. This is done by a heater coil within the relay which actuates a bi-metal disc closing the relay circuit. This takes 1-25 seconds.

↓

The circuit breaker is placed in line to the monitor the amperage draw of the motor. It is an over load and safety protection for the motor.

↓

The current flows to the motor to operate the blower. One end of the motor shaft is for the circulating air wheel and the other side is for the combustion air wheel.

↓

As the circulating air, blows against the sail switch and closes the contacts, completing the circuit. The sail switch is a safety device that insures air flow before ignition.

↓

The limit switch is a safety device that protects the furnace from overheating. The contacts in the limit switch open at a given temperature setting, shutting off power to the electronic ignition system that controls the gas valve.

↓

The next section of operation is controlled by the valve and pilot. Once the power is applied to the valve, the following steps are:

1. Set gas valve knob to the pilot setting to light the pilot.
   a. Light pilot
2. Set gas valve knob to the ON position for burner operation.
3. While ON stand by, if the pilot goes out and the thermostat closes, the blower will come on, but the valve will remain closed. At this time, the pilot must be relit for burner operation.

Note: The blower will remain running until the thermostat contact opens.

↓

As the thermostat senses the room air temperature, the contacts will open removing power from the valve which will shut off the gas. The blower will remain on until the heater coil within the relay cools and the relay opens and stops the current flow to the motor 90 – 120 seconds.

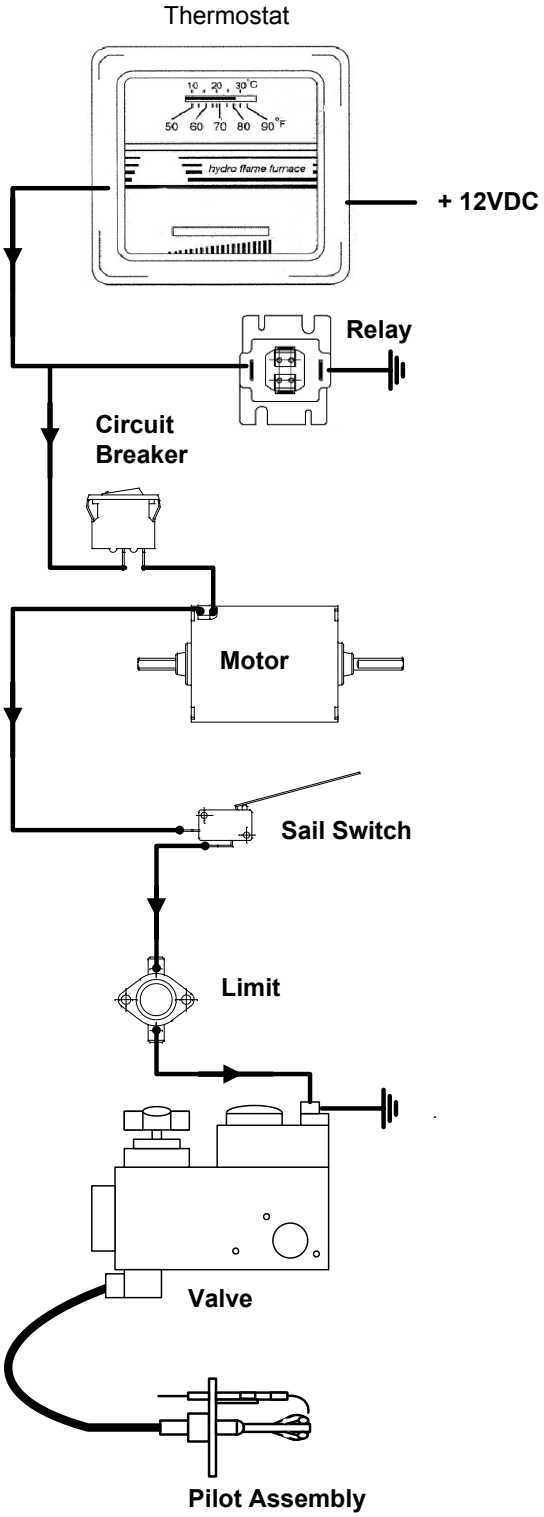

Sequence of Operation – AC Models

Operating Circuitry 24 VAC
The transformer receives 120 VAC which it converts to 24VAC for the operating circuitry.

The thermostat controls the operating circuit to the furnace by reacting to room temperature When room temperature is below the thermostat set point, the contacts close to allow current to flow to the relay (On new control the relay is built into the ignition control). The relay receives 24 VAC and energizes a heater coil within the relay **(with relay on board models timing is down through the micro).** This activates a bi-metal disc which closes the relay circuit. This takes 17-20 seconds **(On control with a built in relay there is only a 1-2 second delay)**.

Once the relay circuit is closed, 120 VAC flows to the motor and allow the blower to run. One end of the motor is for the circulating air wheel and the other end is for the combustion air wheel.

As the circulating air, blows against the sail switch and closes the contacts, completing the circuit. The sail switch is a safety device that insures air flow before ignition.

The limit switch is a safety device that protects the furnace from overheating. The contacts in the limit switch open at a given temperature setting, shutting off power to the electronic ignition system that controls the gas valve.

As power is applied to the electronic ignition circuit board, the system does the following:

1. A timing circuit allows the blower to purge the chamber (15 -17 seconds).
2. The board supplies current to the gas valve and causes it to open. There is an electrical switch in line to the valve to allow power to be manually shut off to the valve. This switch must be on for the furnace to operate. (Switch may be separate or combined with the circuit breaker).
3. As the valve opens, the board sends a high voltage spark to the electrode at the burner. The board detects the presence of a flame, if the flame is not sensed after seven seconds; the board will lock out, shutting off power to the valve.
4. If the system does not ignite and the thermostat remains closed, the blower will remain on until the thermostat is reset manually **(On new controls with the built in relay the system will automatically shut the blower off if even if the thermostat remains closed).**

As the thermostat senses the room air temperature, the contacts will open removing power from the valve which will shut off the gas. The blower will remain on until the heater coil within the relay cools and the relay opens and stops the current flow to the motor **(with relay on board models timing is down through the micro).**

On newer control a diagnostic error code light has been added by counting the flashes an error code can be determined. See diagnostic information for code failures.

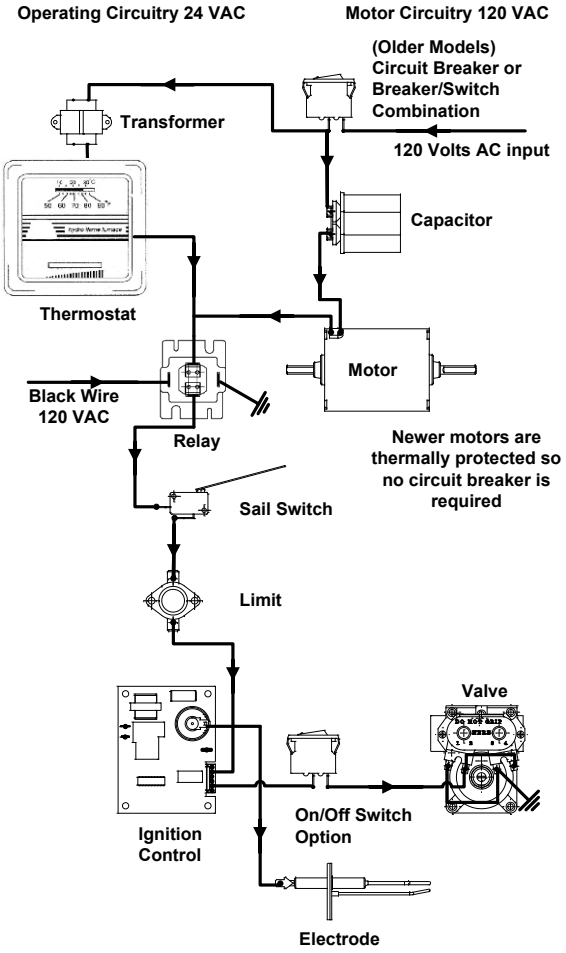

Number of Flashes	Diagnostic Information
1	Low Input Voltage
2	Ignition Failure
3	Open High Limit
4	Stuck APS (sail switch)
5	Module Fault

Critical Installation Criteria

⚠ WARNING
CRITICAL INSTALLATION CRITERIA

- Do not install the furnace on material that restricts return air, such as carpet, or any soft material, such as vinyl.
- Do not install furnace where clearance to combustibles cannot be maintained.
- Do not modify the furnace in any way.
- Do not alter the furnace for a positive grounding system.
- Do not HI-POT this furnace unless the electronic ignition system (circuit board) has been disconnected.
- Do not use a battery charger to supply power to DC model furnace when testing.
- Do not use 120 volt AC current with DC models.
- Do not use the furnace cabinet area as a storage compartment.
- Do not vent this furnace with a venting system serving any other appliance.
- Do not vent this furnace to an outside enclosed porch area.
- This furnace is not to be used for temporary heating of buildings or structures under construction.
- Locate the furnace in an area that will not be blocked by snow.
- Locate the furnace in an area where the flue gases will not cause building materials to degrade over time.
- Install furnace so electrical components are protected from water.
- Do not use closeable registers when minimum ducting cannot be maintained.
- Wire furnace direct to battery when possible.
- Use a minimum of 22 gauge wire for the thermostat.
- Use a minimum of 18 gauge wire to the furnace from the power supply unless otherwise need to keep voltage drop to a minimum.
- Follow wiring code and gauge when replace or fixing.
- Hold both fittings with a wrench when tightening gas connections
- Always meet or exceed minimum ducting requirements.
- Always meet minimum or exceed minimum return air requirements.
- Isolate return air passage from range compartment.

⚠ WARNING
CARBON MONOXIDE POISONING

- Furnace must be installed and vented to these instructions.
- Improper installation, adjustment, alterations, service or maintenance can cause injury or property damage.
- Negative pressure produced by the furnace can affect the combustion air or venting of other appliances if installed in an improper location.

For assistance or additional information, consult a qualified installer, service agency or gas supplier.

ANNUAL PREVENTATIVE MAINTENANCE INSPECTION

The following preventive maintenance and safety checks should be performed by a qualified RV technician once a year, or more, depending on the use of the furnace. Failure to properly maintain the furnace may void the furnace warranty and can result in unsafe furnace operation. Preventive maintenance is not covered under warranty.

⚠ WARNING

- Installation, repairs and preventative maintenance should be done by a qualified service person only.
- The furnace should be inspected before use and at least annually by a qualified service person.
- Frequent cleaning may be required due to excessive lint from carpeting, bedding material, pet hair, etc. It is imperative that control compartments, burners and circulating air passageways of the furnace be kept clean.

⚠ WARNING
• Label all wires prior to disconnection when servicing. Wiring errors can cause improper and dangerous operation. Verify proper operation after servicing.

AIR WHEEL
The air wheel should be clean and clear of obstructions. Starting the furnace with something in the blower will damage the wheel, making replacement necessary.

BURNER
The Burners requires no adjustments, but should be inspected annually. Burners should be cleaned with a wire brush to remove debris and corrosion builds up. If screen area show distortion or larger holes than the rest of the screen burner needs to be replaced.

COMBUSTION CHAMBER
Check the air intake and flue areas of the furnace for internal obstructions, such as wasp or bird nests. The life of the combustion chamber is a function of the amount of time that the furnace has operated. Therefore, it is essential to inspect the chamber for cracks and holes. Have the chamber replaced if it has any cracks or holes – this condition not field repairable. Chamber should be cleaned if obstructions are present, by removing the chamber and flushing the unit out with water.

CONTROL COMPARTMENT
Clean the control compartment to remove dirt and lint.

DUCTING
The heat ducts should be clean and clear of obstructions. Check for proper duct connection. Any ducts disconnected from the furnace or outlets must be reattached. Replacement duct must be rated 200°F minimum rated.

GAS PRESSURE
Using a U-Tube water manometer, with the furnace and all of the gas appliances operating, the pressure should be 11" W.C. (water column) or 27 mbar. Improper gas pressure can cause the furnace to work inconsistently and create unbalanced combustion resulting in sooting or pre-mature failure of the heat chamber.

GAS SUPPLY SYSTEM
Perform a pressure-drop test according to current ANSI standards, to insure that there are no gas leaks.

GASKETS
Inspect all gaskets for tight seals. Do not reuse gaskets always replace with new gaskets!

GENERAL
Check that the physical support of the furnace is sound and without sagging, cracks, gaps, etc.

MOTOR
The motor is lubricated and permanently sealed. It requires no oiling. Brushes and armatures are not replaceable.

RETURN AIR
The return air passage should be clean and clear of obstructions and meet the minimum square inches as specified in the installation instructions. Make sure combustibles are not stored around the furnace or any other items.

VENTING
After checking and clearing, if necessary, the draft cap assembly must have the proper overlap between the exhaust tube and the furnace chamber tube. Any air leakage at these joins may cause improper combustion. Drat cap assembly must overlap no less than 1-1/4" (32 mm), and be positioned against the door screen for proper function.

VOLTAGE
Voltage should be between 10.5 and 13.5 VDC at the furnace during operation. The power at the furnace needs to be checked with each of the following power sources when applicable: generator, battery, and converter. Low voltage can cause the furnace to overheat and cycle. High voltage can cause unbalanced combustion, and excessive motor wear. Note: to increase motor life the furnace should be wired directly through the battery.

WIRE CONNECTIONS
Check the furnace for loses or disconnected wires.

Mechanical Thermostat

WHAT IS A THERMOSTAT?

- It is an ON/OFF switch controlled by a bi-metal coil which opens and closes an electrical contact by sensing changes in the ambient temperature.
- With its contacts close, it supplies power to the time delay relay (or power to the ignition control on new systems) which in turn closes a contact that sends power to the blower motor.
- Normally, the thermostat contacts are closed if the blower is running.
- The hydro flame thermostat is equipped with a heat anticipator which allows one to adjust the length of the heating cycles. A furnace should cycle 5-6 times an hour.
  a. The anticipator is set at 1.0 on all hydro flame thermostats. If you want to shorten the heating cycle, move the anticipator to a lower amp setting. You should not set lower than .48 which is the amperage rating of the gas valve. Setting any lower could burn out the anticipator wire.

Note: heat anticipator adjustments are not covered under warranty.

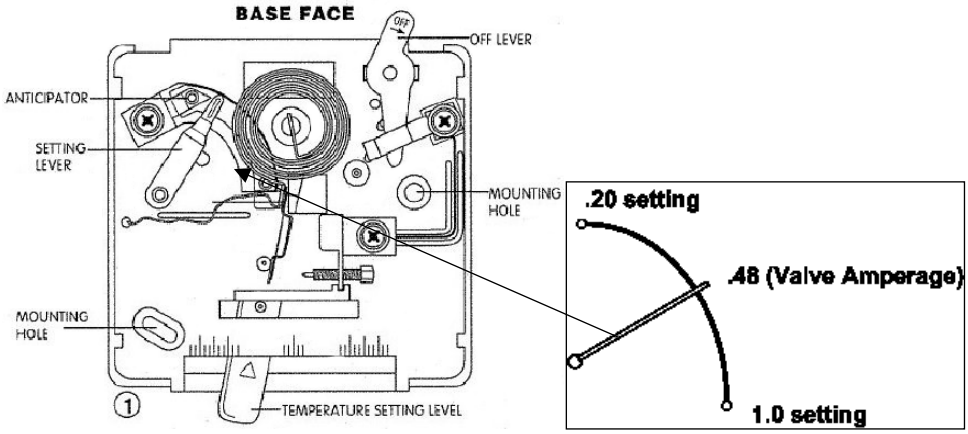

Heat/Cool thermostat are being used in conjunction with air conditioners and our furnace. The warranty, installation instructions and diagnostic information is provided by the manufacturer of the thermostat. However, if you need to isolate a furnace problem or a dual thermostat problem, by-pass the furnace wires at the thermostat. If the furnace ignites and heats, you have a thermostat problem. If the furnace does not run, the problem is in the furnace, and you should consult the trouble shooting guides in the back of this book.

THERMOSTAT LOCATION

- It should be on an inside wall 48” to 54” above the main floor level on an inside wall.
- It should not be near areas of extreme heat or cold.
- It should not be located directly across from a heating duct.
- If installed on an outside wall, a ¾” spacer must be used behind base of thermostat (wood block or similar material). This will allow the thermostat to sense the air temperature in the room and not the temperature of the wall.
- A minimum of 22 gauge wire should be used to connect the thermostat to the furnace. We recommend 18 gauges stranded wire.

Circuit Breaker & Motor

The circuit breaker is actually a re-settable heat sensitive device designed to protect the blower motor. In a furnace, this heat evidences itself in the form of an amp draw. Therefore, since there are different size motors, there are different amperage ratings on circuit breakers. When replacing a breaker, do so with the same amperage rated breaker.

The breakers used on our furnaces are externally mounted and are of a slow blow style. This means that due to their location on our furnaces, the heat of the furnace cannot affect their operation. Likewise, short amperage spikes will not cause them to trip either. The motor will have to produce an excessive and prolonged amperage draw to trip it.

Circuit breaker trips, it does so because a problem exists. After resetting it, voltage and amperage draws should be taken to determine where the problem is these readings will determine if you have a power source, breaker or motor problem.

On our 79 and 85 series furnaces, we have two different types of breakers. The earlier 79 and 85 models and all 89 models used a rectangular shaped slow blow breaker. Its sole purpose was to protect the motor. On late model 79 and 85 models, we started using a finger-size combination breaker on on/off switch. Code required us to be able to shut the gas off at the appliance when servicing it. This switch accomplishes this by shutting off power to the blower motor, which in turn prevents the gas ignition system from coming on.

Therefore, it is not only important to use the same amperage rated breaker, but also the same style of breaker.

As stated earlier, there are different size motors as well. They are different because they must be compatible with the various BUT capacities. Each BUT of furnace requires a specific motor RPM in order for proper ignition and combustion to take place.

It is very important that the correct motor be used for each model of furnace, to identify the correct motor. Older models have “PF” embossed in the metal housing along with a part number. New model have sticker giving the correct Dometic part number. A cross reference service parts list is given in the end of this book.

A new motor has been designed into all of the 85 and 89 series DC furnaces. This new motor design wires attached to the motors resulting better and longer brushes to increase motor life. As a result, the motor kit will not contain a motor mount bracket, the motor and installation instructions will add a little more time to the installation process. However, these are the only motors that will be available for replacements in the field.

Circuit Boards

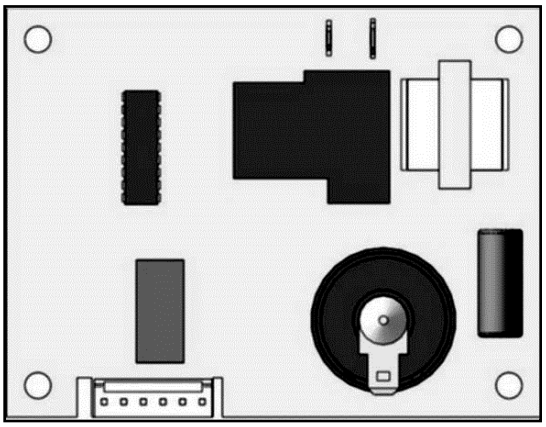

The circuit board has three functions: create a spark, open the gas valve and lock-out when one of the prior two functions, do not occur during the ignition cycle. As long as the circuit board is receiving the minimum micro-amps from the electrode assembly, it will not lock out. It has a 15 second ignition delay as well. This delay allows the furnace to purge any un-burnt gas in the combustion chamber before ignition occurs.

We have used two basic types of circuit boards. The first is the remote sense analog circuit board used for a number of years. A single trial ignition board works in conjunction with either a dual or remote sense electrode. Electrodes come either with one or two porcelain/sensing probes. *This style board use an external relay which did not allow for the furnace blower to shut off if the ignition did not occur and the thermostat contact remain closed*.

The new board, which is currently used, is a micro-processor board. It has three trial ignitions and operates in conjunction with a single or local sense electrode (an electrode that has only one probe that both sparks and senses). **This style board use an internal relay which allow the furnace blower to shut off even if the ignition did not occur and the thermostat contact remain closed**.

Various versions of the 12VDC analog board have been used. The catalog numbers of those boards and are noted below. Fortunately, the local sense micro-processor board is the only one you will have to stock for replacement on a 12VDC furnace. Plastic spacers will be provided with the board so that it can be mounted on metal surfaces that you may encounter some-times on various models of our furnace. The only other circuit board that you have to stock is the AC version.

CATALOG # ON BOARD		ORDER-SERVICE PART NUMBER	
Manufacture Number	**Manufacture**	**Description of Control**	**Part Number**
05-159007-103	Fenwal	Old Style, Uncovered, 12 Vdc	36716
05-309017-153	Fenwal	Uncovered, No Legs, Single Try 12 Vdc	36716
06-235132-001	Fenwal	Single Try, Uncovered With Legs, 12 Vdc	36716
05-505650-153	Fenwal	Three Trial, Uncovered, Micro-Processor, 12 Vdc	36716
05-299004-153	Fenwal	Three Trial, Ac	37515
	Channel	2-Stage Ignition Board	37965
	Channel	2-Stage Motor Control Board	37966
	Fenwal	Relay On Board	36716
	Fenwal	Relay On Board With Blower Control Retrofit Kit	31501
35-535911-113	Fenwal	156 Pin Connection DC Board	33488
35-615931-113	Fenwal	156 Pin Connection AC Board	33487
	Fenwal	89 AC Replacement Kit	37515
	Channel	2-Stage DC Replacement Kit	34696
	Winsson	156 Pin Connection DC Board	30575
	Winsson	156 Pin Connection AC Board	30574

Relay

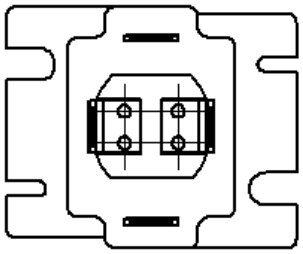

This component is commonly referred to as a time delay relay (TDR). The same relay is used on the 7900, 8012, 8500 and 8900 series furnaces. **Note** this part is only available while current supplies last.
Function – The relay has one primary function.
To purge the plenum of heat and the chamber of any un-burnt gases after each heating cycle

Operation – The motor voltage path of relay is normally open. There should always be voltage from the circuit breaker to the relay terminal of the circuit breaker. There should always be continuity between the thermostat terminal connection and ground terminal connection of the relay.

Only when the thermostat contacts are closed is voltage supplied to the thermostat terminal of the relay. This voltage heats a coil in the relay body. In approximately 20 seconds, this heated coil causes a bimetal disc to close. Voltage now passes through the relay and on to the motor, which in turn should allow the furnace to ignite and start a heating cycle.

When a heating cycle is completed, the contacts of the thermostat open and voltage ceases to the heater coil of the relay. In approximately 45-90 seconds, the heater coil cools down, the bi-metal disc opens and voltage ceases to the motor as well.

AMP Draw – The relay should draw no more than 1 amp. If the relay should draw more than 1 amp, it will burn out the heat anticipator located inside the thermostat.

Sail Switch

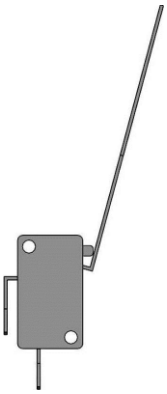

The sail switch is an air proving device. It is used as a safety component that will not let ignition occur until it sees air produced from the motor wheel. It insures that the combustion wheel is rotating fast enough so that there is a proper air for gas mixture for smooth ignition.

There are different size sail switches. The noticeable difference is the size of the paddle and the switch. Each switch is matched to the size of the motor it must respond to on older models. New 7900-II and 8012-II series units have two switches one for all the 7900 series and one for the 8012 unit. The new 8500-IV and 8900-III series have only one switch for both the 8500 series and one for the 8900 series.

When the paddle of the switch is depressed, there should be continuity through the switch. If a sail switch needs to be replaced, it can be replaced with the current series switch. If a larger switch than the original is used, it will probably not close when the motor produces the required air flow and therefore keeping ignition from occurring.

The most common problems with these switches are bent paddles, loose wire connections or an obstruction between the paddle and switch contact. If continuity cannot be read through the switch, the switch must be replaced.

Limit Switch

The limit switch is a very important safety device on a furnace. The function of a limit switch is to protect the furnace from overheating. These switches come in a variety of temperature ratings and are located at critical locations above the heat chamber on the various models of the furnaces. Therefore, it is very important that when one of these switches is replaced, you do so with the properly temperature rated switch.

Failure to do so could causes an unsafe condition with the heating system. When in doubt as to whether you are using the proper limit switch for a furnace, look at the temperature setting located at the base of the switch and match it to the temperature and related switch noted below.

Part Number 36205 was a different type of limit switch was use for a short period. This switch does not reset itself it is a manually reset limit requiring resting by the operator and was only used on 89-II furnaces. It was located above the chamber and tripped in the event of a burn through the chamber area.

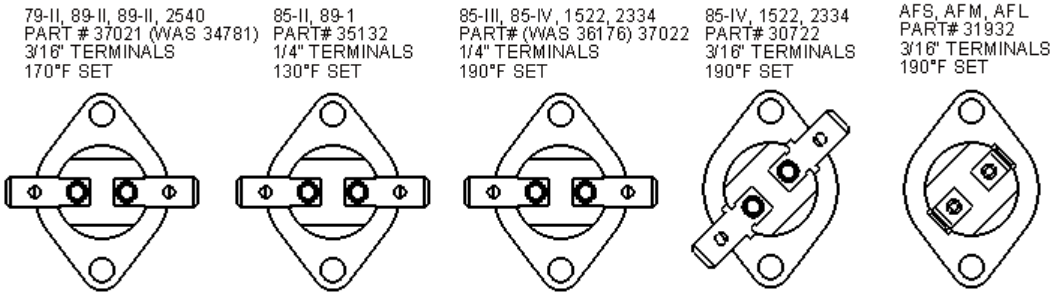

Dual Solenoid Gas Valve

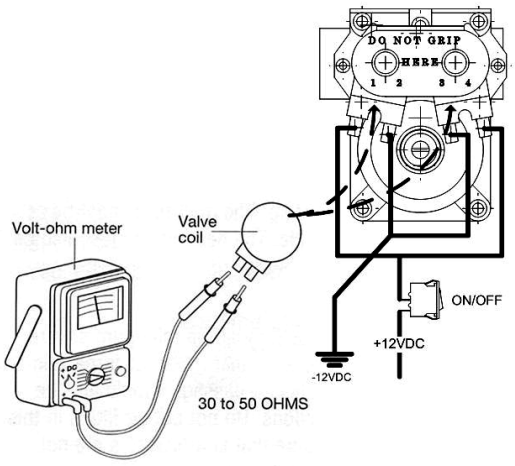

We use a dual solenoid gas valve on all or our furnaces. The valve requires a minimum of 9.0 VDC in order to open and when open, should draw no more than .48 amps.

Later model furnaces have an ON/OFF switch on the wire to the gas valve. This replaces the manual shut-off that was used on earlier model furnaces. You can now electrically shut off the gas to the valve with this switch before servicing the furnace.

When these valves become inoperative, it is typically one or both of the coils that fail. In order to determine which coil is a fault, you need to conduct a continuity test on both leads of each coil. The resistance on a good coil will be 30-50 ohms. If the resistance is not in this range, the coil is defective and must be replaced.

The coils on these valves are wired in parallel. Therefore, when replacing the wires on these coils, it is important that they be attached per the diagram. The red 12VDC supply wires must be attached to terminals 1 and 4 and the ground wires must be attached to terminal 2 and 3. If the coils are mistakenly wired in series and there is a marginal supply voltage, there will be a voltage drop from coil to coil and the will not open.

Burner Head, Electrode and Valve Assembly

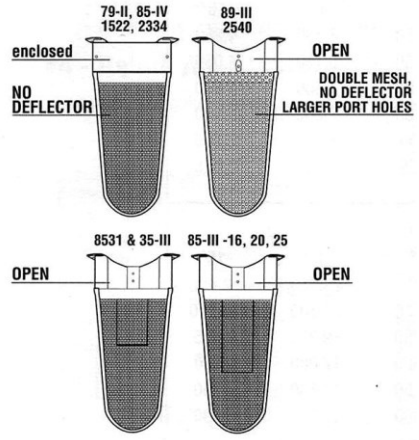

The burner head, electrode and gas valve on the late model 79 series furnaces are individually accessible. However, to service these same components on the late model 85 and 89 series, remove the complete assembly.

The different models and /or BTU ranges of furnaces use different burner heads. These burners differ by the size of the top gas port holes or the deflector that runs through the throat of the burner. If the wrong one is used, it may cause an ignition, sooting or flame sense problem.

When an electrode assembly is installed on a furnace, they will already be in a fixed and predetermined position above the burner. The only adjustment that you may need to do is on the sparking and ground electrode points. This gap should be 1/8". However, when the porcelain on an electrode assembly becomes cracked, it will not function properly and will have to be replaced. When doing so use the proper electrode assembly for the model of furnace being serviced.

There are only two versions of the solenoid valve available for the models of furnaces noted above. These two valves are identical except for the gas inlet porting on them (side or front). As stated earlier in this manual through, the coils are what usually breakdown but they are easily replaceable.

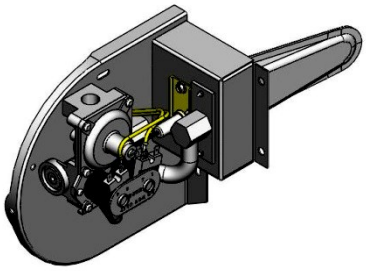

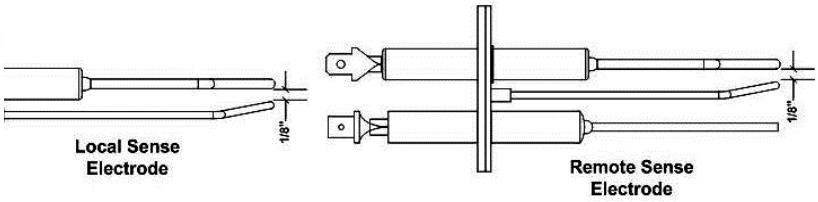

The 4 Always

Remember that you are working on a heating system and not just a furnace. A majority of furnace problems lie outside of the product itself. Therefore, when trouble-shooting a furnace problem, always check the following items before testing or replacing components.

#1- Gas Pressure
The gas pressure should be set at a minimum of 11" W.C. with a minimum of 50% and ideally 100% of the gas fired appliances operating. You should test this pressure with a U-tube Manometer only. If you choose to use a dial-type manometer, calibrate it often with a U-tube manometer.

#2- Voltages
Voltage to the furnace should be between 10.5 and 13.5 VDC during operation with the interior lights ON and OFF. This check should be made with the battery, converter or generator when applicable. Use a digital or analog multi meter when taking voltage readings. Do not use a test light. It does not provide enough useful information for proper diagnosis.

#3- Ducting
Always make sure that the furnace has at least the minimum number of ducts (not including closeable outlets) called out in the installation instructions. Check for proper duct connections at the furnace and heat registers, collapsed ducts and holes in the ducting. The duct runs must be a straight and tight as possible. The heat ducts must also be clean and clear of obstructions.

#4- Return Air
The return air passage should meet the minimum square inches as specified for the particular model of furnace in the installation instructions. This air passage should also be clean and clear of obstructions. Do not put air filters in this passage way. Also, make sure that combustibles are not stored in the furnace compartment.

#1 – Gas Pressure

A furnace is a consumer's friend when the outside temperature gets colder. Unfortunately though, cold is an enemy of LP gas. The BTU capacity of LP per volume decreases as the outside temperature gets colder. Therefore, based on how full the LP tanks are, the ambient temperature outside and how many BTU's the furnace is, there may not be enough gas to sustain ignition on the furnace.

Using the charts below, let's say that a 40,000 BTU furnace won't fire we also know that the 65 lb. LP bottle on the RV is 40% full and it is 0°F degrees outside. One's first thought might be that the burner or valve is bad. However, if we use the chart, the vaporization capacity of the tank in these conditions is only 38,500 BTU's. The furnace is not going to perform very well because there is insufficient BTU capacity in the tank. This make for a lean gas/air mixture which may not be able to be sense by the ignition control to maintain continuous operations.

If you were to put an insulated fire resistant blanket over the tanks and a 75 watt light bulb under that, you would probably raise the temperature of the bottles 10-20°F degrees and almost double the BTU capacity of the tank to vaporize the propane for proper operation. So keep in mind that a furnace problem is not always a component problem.

20 lb. Bottle (*30 lb. bottle multiply rate shown X 1.40)

% Full	+20°F	0°F	-5°F	-10°F	-15°F
60%	36,000	18,000	12,750	8,500	4,250
50%	32,400	16,200	12,150	8,100	4,050
40%	28,800	14,400	11,400	7,600	3,800
30%	25,200	12,600	10,450	7,300	3,150
20%	21,600	10,800	8,100	5,400	2,700
10%	16,200	8,100	6,075	4,050	2,025

65 lb. Under Mount LP Gas Tank BTU available at					
% Full	**+20°F**	**0°F**	**-5°F**	**-10°F**	**-15°F**
60%	95,600	47,800	36,000	23,900	12,100
50%	86,000	43,000	32,250	31,500	11,750
40%	77,000	38,500	29,250	19,250	9,625
30%	68,000	34,000	25,500	17,000	8,500
20%	58,000	29,000	21,750	14,500	7,250
10%	43,200	21,600	16,200	10,800	5,400

#2- Voltages

Voltage to the furnace should be between 10.5 and 13.5 VDC during operation with the interior lights ON and OFF. This check should be made with the battery, converter or generator when applicable. Use a digital or analog multi meter when taking voltage readings. Do not use a test light. It does not provide enough useful information for proper diagnosis.

#3- Minimum Ducting Requirements

The various BTU sizes of 85, 89 and 2-stage series furnaces require a minimum number of square inches of heat ducting. The most common size of soft ducting is 4” diameter. Therefore, since a 4” duct is equal to 12 square inches, we can call out the minimum number of ducts needed for the models of furnaces as noted below.

Furnace Model	Minimum Ducting	Minimum Ducts
8516, 8520	24 sq. in.	2
8525, 8531, 1522	36 sq. in.	3
8535, 8935, 8940, 2334, 2540	48 sq. in.	4

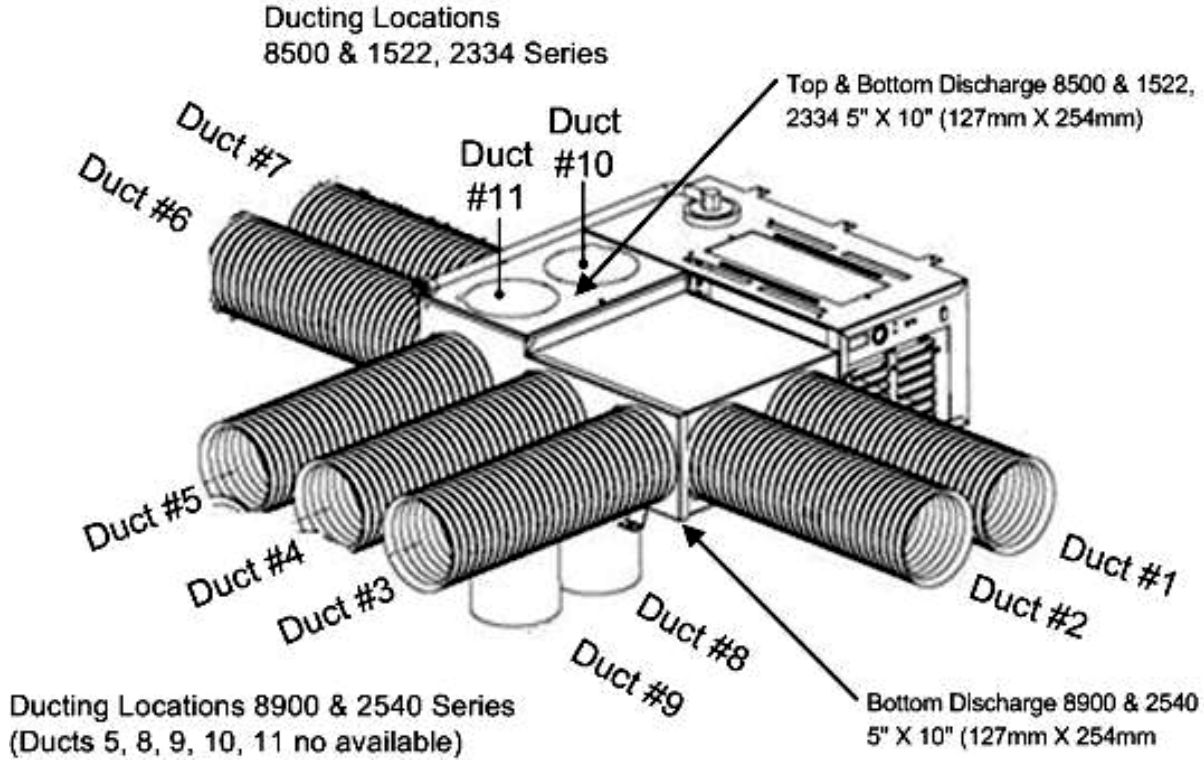

CAUTION – Ducting Installation
4" Flexible Hose

- Each 90° bend adds the equivalent of 10 feet of ducting hose
- Ducting should be securely attached to the furnace
- Each run should be a short and straight as possible and pulled tight

2" Flexible Hose

- 2- 2" duct runs do not equal one 4" duct a 2" duct is only 3 sq. inches of open area.
- 2" duct adapters are available
- 2" ducts are ideally suited for bathroom and holding tank compartments.
- 2" ducts are option in addition to what ducting requirements are needed.

Closeable Outlets

- A closeable outlet does not contribute to the minimum of total outlet recommended for a furnace.

Bottom Discharge

- Furnace must be completely sealed t floor and plenum with a bottom discharge gasket, with no air gaps
- If furnace is installed in middle of run, the main duct run must be a minimum of 24 sq. inches on both sides
- If furnace is installed at the end of the run, the main duct must be 48 sq. inches

#4- Return Air

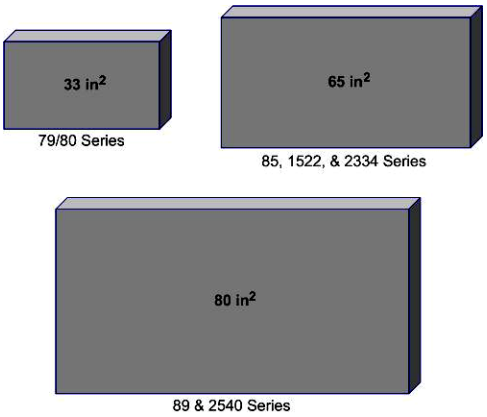

This return air requirement can be met in a couple of ways.

- The return air grille mounted on an inside wall of the trailer, exposed to the cabinet area of the furnaces is the most common mounting used on the 85, 89 and 2-Stage series furnaces.
- Another option is to provide openings at various locations in the furnace cabinet area capable of drawing air from inside the trailer (i.e., routed holes at bases of sofas or walls, etc.)

The total square inches of openings must meet minimum requirements.
Do not place any types of air filter in front of or behind the return air door. Blocking this area will substantially decrease the return air causing – less air delivery to the heat registers – short cycle of the furnace – limiting of the furnace.
We recommend electrical air filters that can be placed anywhere in the open living area of the recreation vehicle. They can be purchase in most stores.
Remember the better the return air supply to the furnace the better the furnace will function and give better heating circulation to the RV.

Trouble Shooting Guides

Guides are only intended for use on Dometic products by service technicians who have successfully completed Dometic training. This guide should be used in conjunction with the appropriate Instruction Manual provided with the product and any applicable Industry Standards. This is not intended to be a complete list. Please direct questions concerning service of Dometic products to 1-866-869-3118 option 5 before proceeding.

Mechanical Thermostat

*** NOT COVERED UNDER WARRANTY**

CAUSE	SOLUTION
BLOWER DOES NOT RUN	
Temperature selector out of place	Re-set to desired position
Thermostat wires broken or disconnected	Repair or replace *
Heat anticipator burned out	Dead short. Repair short and then replace thermostat. *
	Faulty relay drawing more than 1 amp. Replace relay and thermostat.
No continuity through thermostat with contacts closed and switch on.	Replace thermostat.
Continuity through thermostat with contacts closed and switch on.	• Check and reestablish power to thermostat • Reset tripped circuit breaker • Correct poor ground • Correct any loose wires • Replace defective relay • Replace defective motor.
FURNACE DOES NOT CYCLE PROPERLY	
Furnace cycles too quickly	Move anticipator to a higher amp setting to lengthen cycle. NOT covered under warranty Thermostat located too close to a heat duct. Move thermostat or duct outlet. *
High temperature variance	Move anticipator to a lower anticipator setting to shorten cycle. *
Note: When the anticipator is set properly and the heating system has operated for a few hours, the furnace should cycle 5-6 time per hour.	

BURNER FAILS TO IGNITE AND - BLOWER FAILS TO RUN	
No electrical power to the furnace	Reconnect or replace power source. *
Thermostat defective	Replace thermostat
Thermostat wires broken or shorted	Replace wire or wires *
Current overload protector device	Reset circuit breaker. Check amp draw from motor
Defective or tripped (circuit breaker)	According to furnace specifications

Furnace – Electronic Ignition Models

*** NOT COVERED UNDER WARRANTY**

CAUSE	SOLUTION
Blower relay defective	Replace relay
Wire off motor	Reconnect wire
Wire off relay	Reconnect wire
Improper ground	Clean and secure grounds *
Blower motor defective	Replace motor

BLOWER RUNS – BUT FAILS TO IGNITE	
Low voltage/High voltage	Correct power supply *
Gas pressure incorrect	Set pressure to a minimum of 11" W.C. with all appliances running. (Replace regulator if not obtainable) *
Furnace grounding wires not secure	Clean and secure grounds established *
Air intake restricted	Clean air intake *
Motor running slow	Check voltage first. If 12 VDC while running, replace motor
12 volt polarity reversed	Correct polarity *
Exhaust blocked	Clean exhaust *
Combustion air wheel loose	Reposition and tighten
Sail switch defective or wire off	Reconnect wire or replace
Limit switch defective or wire off	Reconnect wire or replace
Edge connector or circuit board dirty	Clean with pencil eraser *
Circuit Board defective	Clean plug contacts. If still defective, replace. (check on board tester when possible)
Gas valve defective	Replace valve or valve coil, depending on problem encountered
Main burner orifice blocked	Clean main burner orifice or replace.
High tension lead wire defective	Replace wire
Electrode out of adjustment	Adjust electrode (take care not to damage porcelain)
Electrode defective	Replace
Obstructed burner head	Clean burner head *

BURNER IGNITES BUT IGNITION SYSTEM "LOCKS OUT" AND TURNS BURNER OFF	
Low gas pressure	Set pressure to a minimum of 11" W.C. with all appliances running Replace regulator if not obtainable *
Exhaust blocked	Clean exhaust *
Combustion air wheel loose	Reposition wheel and tighten
Electrodes out of adjustment	Adjust electrode according to furnace specifications
Electrode defective	Replace electrode
Circuit Board defective	Clean plug contacts. If still defective, replace (Check on board tester when possible)
Flame sensor wire between electrode and circuit board defective	Replace wire
Air leakage at gaskets	Replace gasket
Defective heat exchanger	Replace heat exchanger
SOOT (caused by lazy yellow flame)	
Low gas pressure	Set pressure to a minimum of 11" W.C. with all appliances running. Replace regulator if not obtainable *
Low voltage	Correct power supply *
Air leakage at gaskets	Replace gaskets
Combustion wheel installed backwards or loose	Reposition wheel and tighten
Blockage in heating chamber or burner head	Clean or replace
Faulty motor	Replace motor
Wrong vent kit or draft cap	Replace with correct vent kit or draft cap
FAN RUNS CONTINUOUSLY WITH THERMOSTAT "OFF"	
Defective thermostat	Replace thermostat
Shorted thermostat leads	Replace wire or wires *
Defective relay	Replace relay

LIMITING = BURNER CYCLING ON AND OFF – BLOWER RUNS CONSTANTLY WITH THERMOSTAT ON

Restricted or insufficient discharge ducting	a. Ducting must meet furnace's minimum requirements * b. No excess ducting or unnecessary bends * c. All closeable registers must be fully open and unrestricted *
Furnace over fired	Set gas pressure to a minimum of 11" W.C. with all appliances running replace regulator, if not obtainable. Also, check main burner orifice, it must comply with furnace's specifications *
Restricted return air supply	Make sure return air meets furnace minimum requirements *
Defective limit switch	Replace limit switch

Furnace – Electronic Ignition Models (continued)

*** NOT COVERED UNDER WARRANTY**

CAUSE	SOLUTION
BLOWER SHUTS OFF AT SAME TIME BURNER SHUTS OFF	
Wired wrong	Correct wiring *
Faulty relay	Replace relay

BLOWER VIBRATES OR IS NOISY	
Motor mount loose	Tighten motor mounting bracket a. Ducting must meet furnace's minimum requirements * b. No excess ducting or unnecessary bends * c. All closeable registers must be fully open and unrestricted*
Damaged blower wheel	Replace blower wheel
Motor shaft damaged	Replace motor

INSUFFICIENT HEAT	
Furnace under fired	1. Set gas pressure to 11" W.C. with all appliances running, replace regulator if not obtainable. Also check main burner orifice, it must comply with furnace's specifications 2. Check ducting and return air according to furnaces specifications *
Furnace improperly sized for coach/or conditions	Replace furnace with proper size

BURNER FAILS TO IGNITE AND - BLOWER FAILS TO RUN	
No electrical power to the furnace	Reconnect or replace power source *
Current overload protector device	Reset circuit breaker. Check amp draw from motor defective or tripped (circuit breaker) according to furnace's specifications
Thermostat defective	Replace thermostat
Thermostat wires broken	Replace wire or wires *
Blower motor defective	Replace motor
Blower relay defective	Replace relay
Wire off motor	Reconnect wire *
Wire off relay	Reconnect wire *
Improper ground	Clean and secure grounds *

BLOWER RUNS – BUT FAILS TO IGNITE (PILOT)	
Low Voltage/High Voltage	Correct power supply *
12 volt polarity reversed	Correct polarity *
Furnace grounding wires not secure	Clean and secure ground established *
Gas valve defective	Replace valve or valve coil, depending on problem encountered
Gas pressure incorrect	Set gas pressure to a minimum of 11" W.C. with all appliances running replace regulator, if not obtainable. Also, check main burner orifice, it must comply with furnace's specifications *
Limit switch defective or wire off	Reconnect wire or replace
Sail switch defective or wire off	Reconnect wire or replace
Burner orifice blocked	Clean main burner orifice or replace
Combustion air wheel loose	Reposition and tighten
Burner head adjustment	Reposition and tighten. Adjust burner according to furnace specifications
Exhaust blocked	Clean exhaust *
Air intake restricted	Clean air intake *
Broken or loose wire	Replace or tighten *
Motor running slow	Check voltage first. If 12 VDC while running, replace motor
Pilot orifice plugged	Clean or replace orifice *
Thermocouple defective	Replace thermocouple
Pilot assembly defective	Replace pilot assembly

BURNER CYCLING ON AND OFF – BLOWER RUNS CONTINUOUSLY WITH THERMOSTAT "ON"	
Restricted return air supply	Make sure return air meets furnace's minimum requirements *
Restricted discharge duct system	a. Ducting must meet furnace's minimum requirements * b. No excess ducting or unnecessary bends *

	c. All closeable registers must be fully open and unrestricted *
Defective limit switch	Replace limit switch
Furnace over fired	Set gas pressure to a minimum of 11” W.C. with all appliances running replace regulator, if not obtainable. Also, check main burner orifice, it must comply with furnace’s specifications *

BLOWER SHUTS OFF AT SAME TIME BURNER SHUTS OFF	
Faulty relay	Replace relay
Thermostat wired wrong	Correct wiring *

Furnace – Electronic Ignition Models (continued)

*** * NOT COVERED UNDER WARRANTY**

CAUSE	SOLUTION
BURNER FAILS TO IGNITE AND - BLOWER FAILS TO RUN	
No electrical power to the furnace	Reconnect or replace power source *
BLOWER VIBRATES OR IS NOISY	
Motor mount loose	Tighten motor mounting bracket a. Ducting must meet furnace’s minimum requirements * b. No excess ducting or unnecessary bends * c. All closeable registers must be fully open and unrestricted
Damaged blower wheel	Replace blower wheel
Motor shaft damaged	Replace motor
PILOT FAILS TO IGNITE OR STAY LIT	
Plugged pilot orifice	Clean or replace pilot orifice
Electrode out of adjustment	Adjust electrode to furnace’s specifications
Pilot tube defective	Replace tube
Piezo sparker defective	Replace sparker
Defective thermocouple	Replace thermocouple
Defective valve	Replace valve
Vent kit not sealed	Seal vent where it meets with the furnace *
MICA window missing	Replace MICA
Combustion air hose plugged or collapsed	Replace combustion hose
Water in propane	Add alcohol to the propane bottles *
Burner plate gasket or pilot gasket not sealed	Replace gaskets

LAZY FLAME (yellow)	
High gas pressure	Set gas pressure to a minimum of 11” W.C. with all appliances running replace regulator, if not obtainable. Also, check main burner orifice, it must comply with furnace’s specifications *
Burner out of adjustment	Adjust burner according to furnace specification
Combustion wheel installed backwards or loose (warranty covered only when improperly installed at the factory)	Reposition wheel and tighten
Air leakage at gaskets	Replace gaskets
Low voltage	Correct power supply *

FAN RUNS CONTINUOUSLY WITH THERMOSTAT “OFF”	
Shorted thermostat leads	Replace wire or wires *
Defective relay	Replace relay
Defective thermostat	Replace thermostat

INSUFFICIENT HEAT	
Furnace under fired	1. Set gas pressure to 11” W.C. with all appliances running, replace regulator if not obtainable. Also check main burner orifice, it must comply with furnace’s specifications 2. Check ducting and return air according to furnaces specifications *
Furnace limiting	Check ducting and return air. It must comply with furnace’s specifications *

Notes:

FURNACE TERMINOLOGY

Terminology	Definition
AC Motor	A Motor operating on 120 volts AC.
Adjustable Register	A heat outlet capable of being opened and closed
Air speed Indicators (anemometer)	(anemometer) A tool used to measure the velocity of air movement from a duct outlet
Ambient Air Temperature	Current room air temperature
Amp Draw	The amount of current required to run a given component
Burn Off	The time it takes for the furnace Combustion Chamber to burn off all the oils and lubes used in production
Burner	The component in the furnace where combustion occurs creating the main source of heat within the combustion chamber
Burner Flame Lift Off	When the flame lifts off the burner
Candling	A small flame at the main burner orifice when the valve is in a closed position
Circuit Breaker	A normally closed switch that automatically interrupts and electrical circuit under abnormal AMP load
Circulating Air	Air drawn into the furnace by the main air wheel then heated and forced out the heat outlets
Combustion Air	Air supplied to the burner specifically for combustion
Combustion Chamber	The component where combustion occurs and transfers heat to the circulating air
Converter	Component that is used to change 120 VAC to 12 VDC Available in linear, pharaoh-resonant and switching styles
Cycling	The normal on and off operation of the furnace controlled by the thermostat
DC Motor	Motor operating on 12 VDC
Ignition Circuit Board	A circuit board in the furnace controlling the ignition sequence and proves a flame has been established
Electrode	Both a conductor establishing and electrical spark at the burner to ignite the air to gas mixture, and a sensor to signal the circuit board the flame is established
Fan Switch	A normally open switch that closes at a set temperature allowing power flow to the motor, and allows the motor to run after the burner shuts down to cool down the combustion chamber
Field Electrical Hook Up	The wiring harness that connects the furnace to the coach wiring
Flair Fitting	Brass fitting used to connect the furnace to the gas supply using a flared copper tube
Flash Back	A condition when the flame burns back at the main burner orifice
Flex Ducting	A round, collapsible, wire reinforced product used to deliver the heated air from the furnace to the living area

Terminology	Definition
Forced Combustion	A type of combustion when a second air wheel is used to force air into the burner to increase the air to gas mixture
Gas Pressure	The amount of gas being supplied to the furnace, measured in inches of water column W.C.
Gas Valve	A mechanical device by which the flow of gas is started or stopped by and electrical signal
Gravity Combustion	A type of combustion using natural air flow to supply combustion air for the proper air to gas mixture at the burner
Hard Ducting	Ducting which is supplied below the floor line
Heat Anticipator	Component of a thermostat that can be adjusted to increase or decrease the length of the heating cycle
Heating Element	See combustion chamber
High Tension Lead Wire	The wire carrying the high voltage spark from circuit board to electrode
Incline Manometer	Tool used to measure static pressure of the furnace plenum
Junction Box	A enclosure inside the furnace which houses wire connections
Limit Switch	A normally closed switch that opens at a set temperature which does not allow the furnace to over heat
Limiting	A condition caused by over-heating the limit switch. The burner turns on and off rapidly during this condition
Loud Ignition	A condition where the air to gas mixture is off or the spark gap is incorrect and the burner lights with a loud noise
Main Burner Orifice	The orifice regulating the amount of gas delivered to the burner
Manifold	The piping which delivers gas from the gas connection to the valve or from the valve to the burner
Manual Reset Switch	A limit switch manually requires to be reset after a set temperature has been reached
Micro amps	Current sent back to the circuit board to establish the present of flame at the main burner
Mill volts	Voltage created by a thermocouple or thermopile to hold open a safety valve on pilot valve
Multi-Try Circuit Board	Circuit board providing 2 or 3 trials for ignition
O.E.M.	A manufacture of recreational vehicle, “Original Equipment Manufacture”
Pig Tail	See field electrical hook up

Pilot Light Assembly	An assembly used to light the burner on pilot models
Plenum	A enclosure that gathers air and redirects it to specify locations like the box around the combustion chamber
Power Supply	A source of electrical power, usually a converter, inverter or battery

FURNACE TERMINOLOGY (continued)

Terminology	Definition
Primary Air	A portion of the combustion air directed into the main burner
Resonating	A whining noise created by a burner, air movement, blower out of balance
Return Air	Air pulled into the furnace, heated, force through duct outlets back to the living area
Safety Lockout	Circuit board not sensing a flame, cutting power to the gas valve
Sail Switch	Air proving switch that will engage when the blower motor provides enough air to close the switch.
Secondary Air	Combustion air that is forced around the burner to complete combustion
Sensor Wire	Wire carrying an electrical signal from the electrode back to the circuit board on a remote sense system
Slope Gauge	See incline manometer
Soot	A black powder created when incomplete combustion occurs normally shows at exhaust opening
Start Capacitor	A device giving an electrical boost to the A/C motor during start up
Static Pressure	Amount of pressure inside the furnace plenum or duct caused by the ability of not being able to dispel air from duct outlets
Thermocouple	Safety device used to generate an electrical current sent to the gas valve (pilot) to hold the valve open.
Thermopile	Safety device used to generate more current than a thermocouple to send an electrical current to the gas valve (pilot) to hold the valve open
Thermostat	Device used with the furnace to sense room temperature and regulate the room air temperature
Time Delay Relay	A normally open relay, When activated closes, sending power to the blower motor. When deactivated allows blower to run for a period of time to cool the combustion chamber
Transformer	Device reducing 120 VAC to 24 VAC
U-Tube	Tool measuring gas pressure in inches of water W.C.
VOM **Volt Ohm Meter**	Meter reading voltage, OHMS resistance
Valve Coil	Electromagnetic coil on gas valve used to open and close the valve to start and stop gas flow

NOTE:

FLAT RATE SCHEDULE

DOMETIC
1120 North Main Street • Elkhart, IN 46514
PHONE: 574•264•2131 FAX: 574•206•9713
www.atwoodmobile.com

Hydro Flame ™ Furnaces and Detectors

Flat Rate Schedule

02/19/15

TIME ALLOWANCE SCHEDULE in hours:	85 IV 1522 2334 DC89 III, 2540	AFS, AFM, AFL	AC89 III	79 II 8012 II
Complete **FURNACE**	1.0	1.00	1.00	1.00
Air Box Extension				.50
Air Wheel (Circulating)	.50	.50	.50	1.00
Air Wheel (Combustion)	1.00	1.00	1.00	1.00
Blower Housing	.50	.50	.50	
Burner	.60	.60	.60	.60
Burner Box	.70	.70	.70	
Burner Plate				.60
Burner Plate Gasket				.50
Circuit Breaker	.25	.25	.25	.50
Draft Cap	.25	.25	.25	
Circuit Board	.50	.50	.50	.50
Electrode	.60	.8	.6	.70
Exhaust Tube		.30		.50
Gasket Comb. Chamber	1.50	1.50	1.50	
Limit Switch	.90	.5	.9	.60
Manifold Inlet	.70	.70	.70	
Manifold Outlet	.70	1.00	.70	.80
Motor	1.0	1.25	1	1.15
Motor Bracket	1.00	1.00	1.00	
Motor Capacitor			.25	
Motor Mounting Wall	1.50		1.50	
Orifice (Burner)	.60	.60	.60	.80
Sail Switch	.50	.30	.50	.80
Thermostat	.25	.25	.25	.25
Transformer			.50	
Valve	.80	.80	.80	1.00
Valve Bracket	.60	.60	.60	.80
Wiring Harness	1.00	1.00	1.00	1.00

Complete DETECTORS	.25
Complete Convertor	1.00
Door Furnace	.50
All wire repairs (except harness)	.25
Heat/Cool Thermostat	1.00
2 Stage (add)	.50

NOTES:

1. 2nd and subsequent repairs are paid at flat rate less .5 hrs. If flat rate is .5 hrs or less, 2nd and subsequent repairs are paid at ½ flat rate
2. All flat rates include diagnostic time and when applicable, gas leak test.
3. Additional .50 hrs for removal and replacement of door less furnaces (LD models).

See Attached

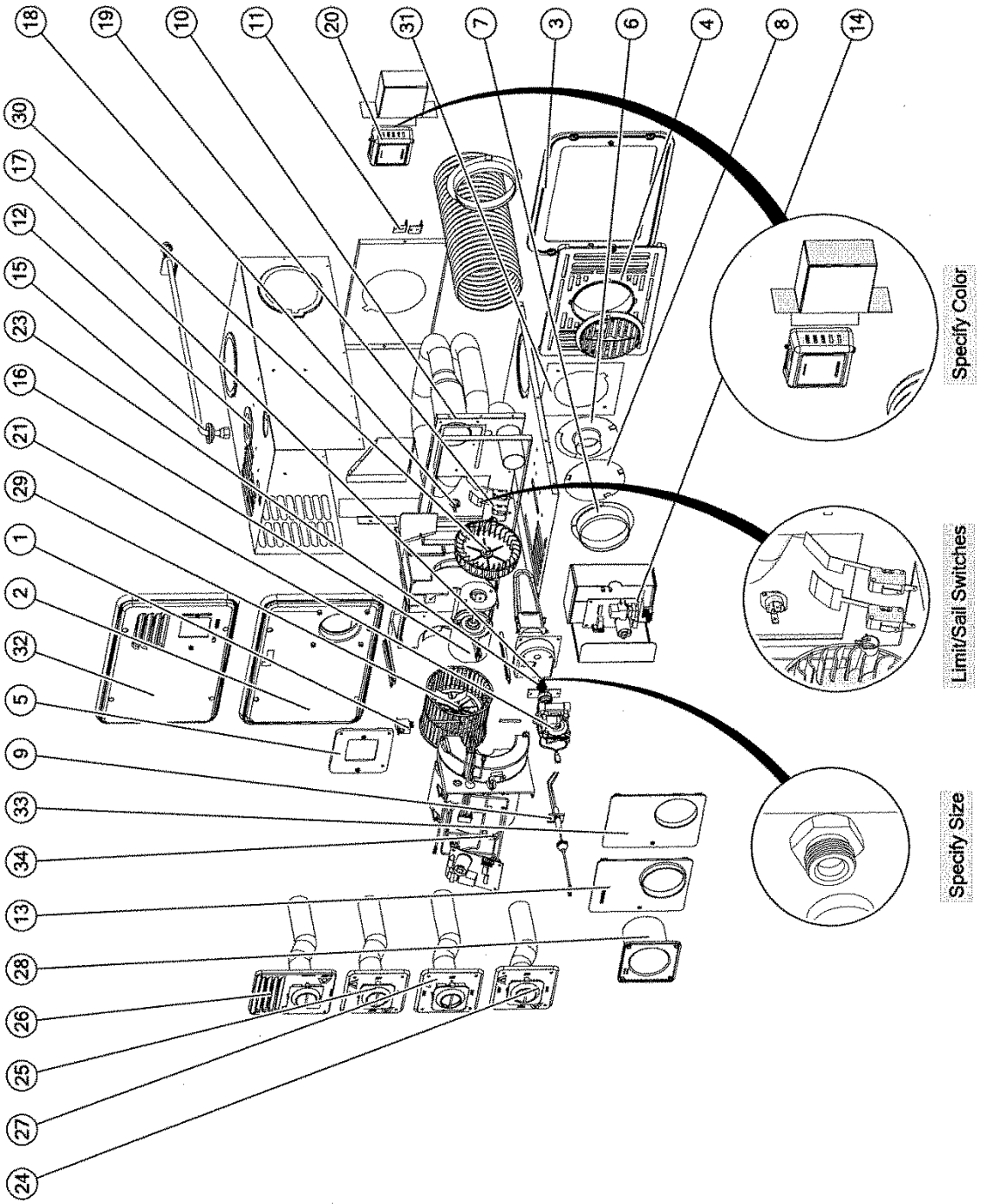
18
19
10
11
20
31
7
3
6
4
8
14
30
17
12
15
23
16
21
29
1
2
32
5
9
33
34
13
28
26
25
27
24
Specify Color
Limit/Sail Switches
Specify Size

AFS Service Parts

Category	P/N	Description NS= PART NOT SHOWN	AFSAD12111	AFSD12111	AFSD16111	AFSD20111	AFSDA12121	AFSD12121	AFSD16121	AFSD20121	AFSAD12131	AFSD12131	AFSD16131	AFSD20131	AFSAD12141	AFSD12141	AFSD16141	AFSD20141	BALLON
Breaker, Circuit																			
	30322	KIT, BREAKER CIRCUIT 7AMP	☐	☐	☐	☑	☐	☐	☐	☑	☐	☐	☐	☑	☐	☐	☐	☑	1
	30320	KIT, BREAKER CIRUCIT 5AMP	☑	☑	☑	☐	☑	☑	☑	☐	☑	☑	☑	☐	☑	☑	☑	☐	1
Doors																			
	32344	KIT, DOOR ASM S #44 BLACK	☑	☑	☑	☑	☐	☐	☐	☐	☑	☑	☑	☑	☑	☑	☑	☑	2
	30641	KIT, DOOR S #34 ARCTIC WHITE L	☑	☑	☑	☑	☐	☐	☐	☐	☑	☑	☑	☑	☑	☑	☑	☑	32
	31840	KIT, DOOR S #44 BLACK L	☑	☑	☑	☑	☐	☐	☐	☐	☑	☑	☑	☑	☑	☑	☑	☑	32
	30260	KIT, FRONT GRILL LD	☐	☐	☐	☐	☑	☑	☑	☑	☐	☐	☐	☐	☐	☐	☐	☐	3
	30259	KIT, FRONT GRILL OD	☑	☑	☑	☑	☐	☐	☐	☐	☑	☑	☑	☑	☑	☑	☑	☑	4
	31876	KIT, VENT ADAPTER DOOR	☑	☑	☑	☑	☐	☐	☐	☐	☑	☑	☑	☑	☑	☑	☑	☑	5
Ducting																			
	36688	ADAPTER,DUCT,2 INCH	☑	☑	☑	☑	☑	☑	☑	☑	☑	☑	☑	☑	☑	☑	☑	☑	6
	31474	ADAPTER,DUCT,4 INCH	☑	☑	☑	☑	☑	☑	☑	☑	☑	☑	☑	☑	☑	☑	☑	☑	7
	31361	PLATE, DUCT COVER, 4 INCH	☑	☑	☑	☑	☑	☑	☑	☑	☑	☑	☑	☑	☑	☑	☑	☑	8
Electrode																			
	35100	KIT, ELECTRODE ASM SML	☑	☑	☑	☑	☑	☑	☑	☑	☑	☑	☑	☑	☑	☑	☑	☑	9
Elements																			
	35711	KIT, HEAT EXCHANGER S	☑	☑	☑	☑	☑	☑	☑	☑	☑	☑	☑	☑	☑	☑	☑	☑	10
General Parts																			
	31244	KIT, CASING LEG	☑	☑	☑	☑	☑	☑	☑	☑	☑	☑	☑	☑	☑	☑	☑	☑	11
	35706	KIT, GAS LINE GROMMET	☑	☑	☑	☑	☑	☑	☑	☑	☑	☑	☑	☑	☑	☑	☑	☑	12
Igniton, Controls																			
	31501	KIT,UNIVERSAL IGNITION DC	☑	☑	☑	☑	☑	☑	☑	☑	☑	☑	☑	☑	☑	☑	☑	☑	14
	32353	KIT,UNIVERSAL IGNITION DC SMT	☑	☑	☑	☑	☑	☑	☑	☑	☑	☑	☑	☑	☑	☑	☑	☑	14
Manifold																			
	35712	KIT, MANIFOLD EXT ASM SML	☐	☐	☐	☐	☑	☑	☑	☑	☑	☑	☑	☑	☑	☑	☑	☑	15
	32349	KIT, MANIFOLD, INLET SML	☑	☑	☑	☑	☑	☑	☑	☑	☑	☑	☑	☑	☑	☑	☑	☑	NS
Motors																			
	30758	KIT, MOTOR S12-16	☐	☑	☑	☐	☐	☑	☑	☐	☐	☑	☑	☐	☐	☑	☑	☐	16
	30760	KIT, MOTOR S20	☐	☐	☐	☑	☐	☐	☐	☑	☐	☐	☐	☑	☐	☐	☐	☑	16
	30778	KIT, MOTOR SA12	☑	☐	☐	☐	☑	☐	☐	☐	☑	☐	☐	☐	☑	☐	☐	☐	16
Orifices																			
	31083	KIT, ORIFICE #56 LP	☐	☐	☑	☐	☐	☐	☑	☐	☐	☐	☑	☐	☐	☐	☑	☐	17
	31086	KIT, ORIFICE #60 LP	☑	☑	☐	☐	☑	☑	☐	☐	☑	☑	☐	☐	☑	☑	☐	☐	17
	30789	KIT, ORIFICE 1.25MM LP	☐	☐	☐	☑	☐	☐	☐	☑	☐	☐	☐	☑	☐	☐	☐	☑	17
Switches, Limit																			
	31091	KIT, LIMIT SWITCH 190	☑	☑	☑	☑	☑	☑	☑	☑	☑	☑	☑	☑	☑	☑	☑	☑	18
Switches, Sail																			
	31093	KIT, SAIL SWITCH SM	☑	☑	☑	☐	☑	☑	☑	☐	☑	☑	☑	☐	☑	☑	☑	☐	19
	31094	KIT, SAIL SWITCH SML	☐	☐	☐	☑	☐	☐	☐	☑	☐	☐	☐	☑	☐	☐	☐	☑	19
Thermostats																			
	32300	THERMOSTAT,HEAT ONLY,BLACK	☑	☑	☑	☑	☑	☑	☑	☑	☑	☑	☑	☑	☑	☑	☑	☑	20
	38452	THERMOSTAT,HEAT ONLY,BROWN	☑	☑	☑	☑	☑	☑	☑	☑	☑	☑	☑	☑	☑	☑	☑	☑	20
	38453	THERMOSTAT,HEAT ONLY,WHITE	☑	☑	☑	☑	☑	☑	☑	☑	☑	☑	☑	☑	☑	☑	☑	☑	20

AFS Service Parts

Category	P/N	Description NS= PART NOT SHOWN	AFSAD12111	AFSD12111	AFSD16111	AFSD20111	AFSDA12121	AFSD12121	AFSD16121	AFSD20121	AFSAD12131	AFSD12131	AFSD16131	AFSD20131	AFSAD12141	AFSD12141	AFSD16141	AFSD20141	BALLON
Valves																			
	31096	KIT, 12 DC VALVE V1 SML	☑	☑	☑	☑	☑	☑	☑	☑	☑	☑	☑	☑	☑	☑	☑	☑	21
	31097	KIT, VALVE 12 VDC STR SML	☑	☑	☑	☑	☑	☑	☑	☑	☑	☑	☑	☑	☑	☑	☑	☑	23
	31098	KIT, VALVE 12VDC TOP SML	☑	☑	☑	☑	☑	☑	☑	☑	☑	☑	☑	☑	☑	☑	☑	☑	23
Vent, Exhaust																			
	31808	KIT, DOOR VENT ASM .750 V4	☐	☑	☐	☐	☐	☐	☐	☐	☐	☑	☐	☐	☐	☑	☐	☐	24
	31798	KIT, DOOR VENT ASM .830 V4	☐	☐	☐	☑	☐	☐	☐	☐	☐	☐	☐	☑	☐	☐	☐	☑	24
	31777	KIT, DOOR VENT ASM .875 V4	☑	☐	☑	☐	☐	☐	☐	☐	☑	☐	☑	☐	☑	☐	☑	☐	24
	30579	KIT, LD VENT .688 V3	☐	☐	☐	☐	☐	☑	☐	☐	☐	☐	☐	☐	☐	☐	☐	☐	26
	30580	KIT, LD VENT .750 V3	☐	☐	☐	☐	☐	☐	☐	☑	☐	☐	☐	☐	☐	☐	☐	☐	26
	31266	KIT, LD VENT .750 V4	☐	☐	☐	☐	☐	☑	☐	☐	☐	☐	☐	☐	☐	☐	☐	☐	25
	30936	KIT, LD VENT .750 V4 SW	☐	☐	☐	☐	☐	☑	☐	☐	☐	☐	☐	☐	☐	☐	☐	☐	27
	30581	KIT, LD VENT .830 V3	☐	☐	☐	☐	☑	☐	☑	☐	☐	☐	☐	☐	☐	☐	☐	☐	26
	31269	KIT, LD VENT .830 V4	☐	☐	☐	☐	☐	☐	☐	☑	☐	☐	☐	☐	☐	☐	☐	☐	25
	30718	KIT, LD VENT .830 V4 SMW	☐	☐	☐	☐	☐	☐	☐	☑	☐	☐	☐	☐	☐	☐	☐	☐	27
	31271	KIT, LD VENT .875 V4	☐	☐	☐	☐	☑	☐	☑	☐	☐	☐	☐	☐	☐	☐	☐	☐	25
	30937	KIT, LD VENT .875 V4 MW	☐	☐	☐	☐	☑	☐	☑	☐	☐	☐	☐	☐	☐	☐	☐	☐	27
	30197	VENT COVER PANEL SM V2-W	☐	☐	☐	☐	☑	☑	☑	☑	☐	☐	☐	☐	☐	☐	☐	☐	13
	30456	VENT COVER PANEL SM V3	☐	☐	☐	☐	☑	☑	☑	☑	☐	☐	☐	☐	☐	☐	☐	☐	13
	31923	VENT PANEL EXTENSION SM V1	☐	☐	☐	☐	☑	☑	☑	☑	☐	☐	☐	☐	☐	☐	☐	☐	NS
	30457	VENT PANEL EXTENSION SML V3	☐	☐	☐	☐	☑	☑	☑	☑	☐	☐	☐	☐	☐	☐	☐	☐	33
	30611	VENT PANEL EXTENSION SML V4	☐	☐	☐	☐	☑	☑	☑	☑	☐	☐	☐	☐	☐	☐	☐	☐	26
Wheels																			
	31113	KIT, BLOWER WHEEL S	☑	☑	☑	☑	☑	☑	☑	☑	☑	☑	☑	☑	☑	☑	☑	☑	28
	33128	KIT, COMBUSTION WHEEL	☑	☑	☑	☑	☑	☑	☑	☑	☑	☑	☑	☑	☑	☑	☑	☑	29
Wiring																			
	31114	KIT, DC WIRING HARNESS	☑	☑	☑	☑	☑	☑	☑	☑	☑	☑	☑	☑	☑	☑	☑	☑	34

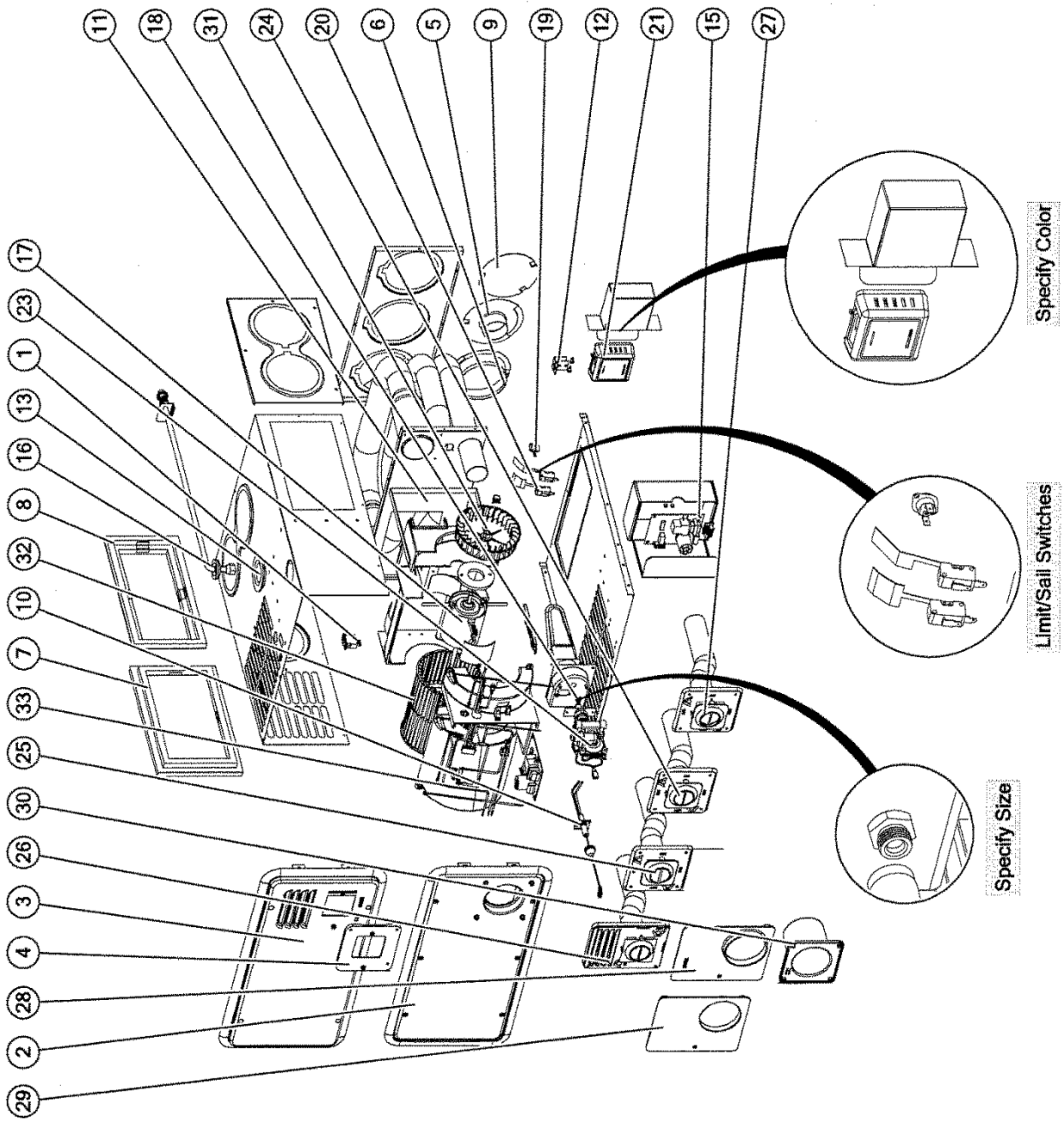
11
18
31
24
20
6
5
9
19
12
21
15
27
17
23
1
13
16
8
32
10
7
33
25
30
26
3
4
28
2
29
Specify Color
Limit/Sail Switches
Specify Size

AFM Service Parts

NS=PART NOT SHOWN

Category	P/N	Description	AFMD16111	AFMD20111	AFMD25111	AFMD30111	AFMD35111	AFMD16121	AFMD20121	AFMD25121	AFMD30121	AFMD35121	AFMD16131	AFMD20131	AFMD25131	AFMD30131	AFMD35131	AFMD16141	AFMD20141	AFMD25141	AFMD30141	AFMD35141	AFMD16151	AFMD20151	AFMD25151	AFMD30151	AFMD35151	Balloon
Breaker, Circuit																												
	30335	KIT, BREAKER CIRCUIT 10AMP	☐	☐	☑	☑	☐	☐	☐	☑	☑	☐	☐	☐	☑	☑	☐	☐	☐	☑	☑	☐	☐	☐	☑	☑	☐	1
	30322	KIT, BREAKER CIRCUIT 7AMP	☑	☑	☐	☐	☐	☑	☑	☐	☐	☐	☑	☑	☐	☐	☐	☑	☑	☐	☐	☐	☑	☑	☐	☐	☐	1
	30337	KIT, BREAKER CIRCUIT 15AMP	☐	☐	☐	☐	☑	☐	☐	☐	☐	☑	☐	☐	☐	☐	☑	☐	☐	☐	☐	☑	☐	☐	☐	☐	☑	1
Doors																												
	30539	KIT, DOOR M #34 ARCTIC WHITE L	☑	☑	☑	☑	☑	☐	☐	☐	☐	☐	☑	☑	☑	☑	☑	☑	☑	☑	☑	☑	☑	☑	☑	☑	☑	3
	30637	KIT, DOOR M #44 BLACK L	☑	☑	☑	☑	☑	☐	☐	☐	☐	☐	☑	☑	☑	☑	☑	☑	☑	☑	☑	☑	☑	☑	☑	☑	☑	3
	31863	KIT, DOOR M-F #34 ARTIC WHITE	☑	☑	☑	☑	☑	☐	☐	☐	☐	☐	☑	☑	☑	☑	☑	☑	☑	☑	☑	☑	☑	☑	☑	☑	☑	2
	31874	KIT, DOOR M-F #44 BLACK	☑	☑	☑	☑	☑	☐	☐	☐	☐	☐	☑	☑	☑	☑	☑	☑	☑	☑	☑	☑	☑	☑	☑	☑	☑	2
	31876	KIT, VENT ADAPTER DOOR	☑	☑	☑	☑	☑	☐	☐	☐	☐	☐	☑	☑	☑	☑	☑	☑	☑	☑	☑	☑	☑	☑	☑	☑	☑	4
Ducting																												
	36688	ADAPTER,DUCT,2 INCH	☑	☑	☑	☑	☑	☑	☑	☑	☑	☑	☑	☑	☑	☑	☑	☑	☑	☑	☑	☑	☑	☑	☑	☑	☑	5
	31474	ADAPTER,DUCT,4 INCH	☑	☑	☑	☑	☑	☑	☑	☑	☑	☑	☑	☑	☑	☑	☑	☑	☑	☑	☑	☑	☑	☑	☑	☑	☑	6
	30205	KIT, ADAPTER PLATE SIDE DISCH	☑	☑	☑	☑	☑	☑	☑	☑	☑	☑	☑	☑	☑	☑	☑	☑	☑	☑	☑	☑	☑	☑	☑	☑	☑	7
	30261	KIT, BOTTOM PLATE ADAPTER ASM	☑	☑	☑	☑	☑	☑	☑	☑	☑	☑	☑	☑	☑	☑	☑	☑	☑	☑	☑	☑	☑	☑	☑	☑	☑	8
	31361	PLATE, DUCT COVER, 4 INCH	☑	☑	☑	☑	☑	☑	☑	☑	☑	☑	☑	☑	☑	☑	☑	☑	☑	☑	☑	☑	☑	☑	☑	☑	☑	9
Electrode																												
	35100	KIT, ELECTRODE ASM SML	☑	☑	☑	☑	☑	☑	☑	☑	☑	☑	☑	☑	☑	☑	☑	☑	☑	☑	☑	☑	☑	☑	☑	☑	☑	10
Elements																												
	35710	KIT, HEAT EXCHANGER M	☑	☑	☑	☑	☑	☑	☑	☑	☑	☑	☑	☑	☑	☑	☑	☑	☑	☑	☑	☑	☑	☑	☑	☑	☑	11
General Parts																												
	31244	KIT, CASING LEG	☑	☑	☑	☑	☑	☑	☑	☑	☑	☑	☑	☑	☑	☑	☑	☑	☑	☑	☑	☑	☑	☑	☑	☑	☑	12
	35706	KIT, GAS LINE GROMMET	☑	☑	☑	☑	☑	☑	☑	☑	☑	☑	☑	☑	☑	☑	☑	☑	☑	☑	☑	☑	☑	☑	☑	☑	☑	13
Igniton, Controls																												
	31501	KIT,UNIVERSAL IGNITION DC	☑	☑	☑	☑	☑	☑	☑	☑	☑	☑	☑	☑	☑	☑	☑	☑	☑	☑	☑	☑	☑	☑	☑	☑	☑	15
	32353	KIT,UNIVERSAL IGNITION DC SMT	☑	☑	☑	☑	☑	☑	☑	☑	☑	☑	☑	☑	☑	☑	☑	☑	☑	☑	☑	☑	☑	☑	☑	☑	☑	15
Manifold																												
	35712	KIT, MANIFOLD EXT ASM SML	☐	☐	☐	☐	☐	☑	☑	☑	☑	☑	☑	☑	☑	☑	☑	☑	☑	☑	☑	☑	☑	☑	☑	☑	☑	16
	32349	KIT, MANIFOLD, INLET SML	☑	☑	☑	☑	☑	☑	☑	☑	☑	☑	☑	☑	☑	☑	☑	☑	☑	☑	☑	☑	☑	☑	☑	☑	☑	NS
Motors																												
	30720	KIT, MOTOR L35-40 M35	☐	☐	☐	☐	☑	☐	☐	☐	☐	☑	☐	☐	☐	☐	☑	☐	☐	☐	☐	☑	☐	☐	☐	☐	☑	17
	30730	KIT, MOTOR M16-20	☑	☑	☐	☐	☐	☑	☑	☐	☐	☐	☑	☑	☐	☐	☐	☑	☑	☐	☐	☐	☑	☑	☐	☐	☐	17
	30722	KIT, MOTOR M25-30	☐	☐	☑	☑	☐	☐	☐	☑	☑	☐	☐	☐	☑	☑	☐	☐	☐	☑	☑	☐	☐	☐	☑	☑	☐	17

AFM Service Parts

Category	P/N	Description	AFMD16111	AFMD20111	AFMD25111	AFMD30111	AFMD35111	AFMD16121	AFMD20121	AFMD25121	AFMD30121	AFMD35121	AFMD16131	AFMD20131	AFMD25131	AFMD30131	AFMD35131	AFMD16141	AFMD20141	AFMD25141	AFMD30141	AFMD35141	AFMD16151	AFMD20151	AFMD25151	AFMD30151	AFMD35151	Ballon
Orifices																												
	31078	KIT, ORIFICE #50 LP	☐	☐	☐	☐	☑	☐	☐	☐	☐	☑	☐	☐	☐	☐	☑	☐	☐	☐	☐	☑	☐	☐	☐	☐	☑	18
	31081	KIT, ORIFICE #52 LP	☐	☐	☐	☑	☐	☐	☐	☐	☑	☐	☐	☐	☐	☑	☐	☐	☐	☐	☑	☐	☐	☐	☐	☑	☐	18
	31083	KIT, ORIFICE #56 LP	☑	☐	☐	☐	☐	☑	☐	☐	☐	☐	☑	☐	☐	☐	☐	☑	☐	☐	☐	☐	☑	☐	☐	☐	☐	18
	30829	KIT, ORIFICE 1.30MM LP	☐	☑	☐	☐	☐	☐	☑	☐	☐	☐	☐	☑	☐	☐	☐	☐	☑	☐	☐	☐	☐	☑	☐	☐	☐	18
	30845	KIT, ORIFICE 1.45MM LP	☐	☐	☑	☐	☐	☐	☐	☑	☐	☐	☐	☐	☑	☐	☐	☐	☐	☑	☐	☐	☐	☐	☑	☐	☐	18
Switches, Limit																												
	31091	KIT, LIMIT SWITCH 190	☑	☑	☑	☑	☑	☑	☑	☑	☑	☑	☑	☑	☑	☑	☑	☑	☑	☑	☑	☑	☑	☑	☑	☑	☑	19
Switches, Sail																												
	31093	KIT, SAIL SWITCH SM	☑	☑	☐	☐	☐	☑	☑	☐	☐	☐	☑	☑	☐	☐	☐	☑	☑	☐	☐	☐	☑	☑	☐	☐	☐	20
	31094	KIT, SAIL SWITCH SML	☐	☐	☑	☑	☑	☐	☐	☑	☑	☑	☐	☐	☑	☑	☑	☐	☐	☑	☑	☑	☐	☐	☑	☑	☑	20
Thermostats																												
	32300	THERMOSTAT,HEAT ONLY,BLACK	☑	☑	☑	☑	☑	☑	☑	☑	☑	☑	☑	☑	☑	☑	☑	☑	☑	☑	☑	☑	☑	☑	☑	☑	☑	21
	38452	THERMOSTAT,HEAT ONLY,BROWN	☑	☑	☑	☑	☑	☑	☑	☑	☑	☑	☑	☑	☑	☑	☑	☑	☑	☑	☑	☑	☑	☑	☑	☑	☑	21
	38453	THERMOSTAT,HEAT ONLY,WHITE	☑	☑	☑	☑	☑	☑	☑	☑	☑	☑	☑	☑	☑	☑	☑	☑	☑	☑	☑	☑	☑	☑	☑	☑	☑	21
Valves																												
	31096	KIT, 12 DC VALVE V1 SML	☑	☑	☑	☑	☑	☑	☑	☑	☑	☑	☑	☑	☑	☑	☑	☑	☑	☑	☑	☑	☑	☑	☑	☑	☑	23
	31097	KIT, VALVE 12 VDC STR SML	☑	☑	☑	☑	☑	☑	☑	☑	☑	☑	☑	☑	☑	☑	☑	☑	☑	☑	☑	☑	☑	☑	☑	☑	☑	23
	31098	KIT, VALVE 12VDC TOP SML	☑	☑	☑	☑	☑	☑	☑	☑	☑	☑	☑	☑	☑	☑	☑	☑	☑	☑	☑	☑	☑	☑	☑	☑	☑	23
Vent, Exhaust																												
	31777	KIT, DOOR VENT ASM .875 V4	☑	☐	☐	☐	☐	☐	☐	☐	☐	☐	☑	☐	☐	☐	☐	☑	☐	☐	☐	☐	☑	☐	☐	☐	☐	24
	31809	KIT, DOOR VENT ASM 1.10 V4	☐	☐	☑	☐	☐	☐	☐	☐	☐	☐	☐	☐	☑	☐	☐	☐	☐	☑	☐	☐	☐	☐	☑	☐	☐	24
	31722	KIT, DOOR VENT SM NB V4	☐	☑	☐	☑	☑	☐	☐	☐	☐	☐	☐	☑	☐	☑	☑	☐	☑	☐	☑	☑	☐	☑	☐	☑	☑	24
	30582	KIT, LD VENT .875 V3	☐	☐	☐	☐	☐	☑	☐	☑	☐	☐	☐	☐	☐	☐	☐	☐	☐	☐	☐	☐	☐	☐	☐	☐	☐	26
	30937	KIT, LD VENT .875 V4 MW	☐	☐	☐	☐	☐	☑	☐	☐	☐	☐	☐	☐	☐	☐	☐	☐	☐	☐	☐	☐	☐	☐	☐	☐	☐	27
	31273	KIT, LD VENT 1.10 V4	☐	☐	☐	☐	☐	☐	☐	☑	☐	☐	☐	☐	☐	☐	☐	☐	☐	☐	☐	☐	☐	☐	☐	☐	☐	24
	32311	KIT, LD VENT 1.10 V4 LW	☐	☐	☐	☐	☐	☐	☐	☑	☐	☐	☐	☐	☐	☐	☐	☐	☐	☐	☐	☐	☐	☐	☐	☐	☐	27
	30583	KIT, LD VENT 1.100 V3	☐	☐	☐	☐	☐	☐	☐	☐	☑	☑	☐	☐	☐	☐	☐	☐	☐	☐	☐	☐	☐	☐	☐	☐	☐	26
	30578	KIT, LD VENT NB V3	☐	☐	☐	☐	☐	☐	☑	☐	☐	☐	☐	☐	☐	☐	☐	☐	☐	☐	☐	☐	☐	☐	☐	☐	☐	10
	31813	KIT, LD VENT NB V4	☐	☐	☐	☐	☐	☐	☑	☐	☑	☑	☐	☐	☐	☐	☐	☐	☐	☐	☐	☐	☐	☐	☐	☐	☐	25
	32296	KIT, LD VENT NB V4 SMW	☐	☐	☐	☐	☐	☐	☑	☐	☑	☑	☐	☐	☐	☐	☐	☐	☐	☐	☐	☐	☐	☐	☐	☐	☐	27
	30197	VENT COVER PANEL SM V2-W	☐	☐	☐	☐	☐	☑	☑	☑	☑	☑	☐	☐	☐	☐	☐	☐	☐	☐	☐	☐	☐	☐	☐	☐	☐	29
	30456	VENT COVER PANEL SM V3	☐	☐	☐	☐	☐	☑	☑	☑	☑	☑	☐	☐	☐	☐	☐	☐	☐	☐	☐	☐	☐	☐	☐	☐	☐	29

NS=PART NOT SHOWN

AFM Service Parts

NS=PART NOT SHOWN

Category	P/N	Description	AFMD16111	AFMD20111	AFMD25111	AFMD30111	AFMD35111	AFMD16121	AFMD20121	AFMD25121	AFMD30121	AFMD35121	AFMD16131	AFMD20131	AFMD25131	AFMD30131	AFMD35131	AFMD16141	AFMD20141	AFMD25141	AFMD30141	AFMD35141	AFMD16151	AFMD20151	AFMD25151	AFMD30151	AFMD35151	Ballon
	31923	VENT PANEL EXTENSION SM V1	☐	☐	☐	☐	☐	☑	☑	☑	☑	☑	☐	☐	☐	☐	☐	☐	☐	☐	☐	☐	☐	☐	☐	☐	☐	NS
	30457	VENT PANEL EXTENSION SML V3	☐	☐	☐	☐	☐	☑	☑	☑	☑	☑	☐	☐	☐	☐	☐	☐	☐	☐	☐	☐	☐	☐	☐	☐	☐	29
	30611	VENT PANEL EXTENSION SML V4	☐	☐	☐	☐	☐	☑	☑	☑	☑	☑	☐	☐	☐	☐	☐	☐	☐	☐	☐	☐	☐	☐	☐	☐	☐	30
Wheels																												
	33126	KIT, BLOWER WHEEL & CLAMP	☑	☑	☑	☑	☑	☑	☑	☑	☑	☑	☑	☑	☑	☑	☑	☑	☑	☑	☑	☑	☑	☑	☑	☑	☑	32
	33128	KIT, COMBUSTION WHEEL	☑	☑	☑	☑	☑	☑	☑	☑	☑	☑	☑	☑	☑	☑	☑	☑	☑	☑	☑	☑	☑	☑	☑	☑	☑	31
Wiring																												
	31114	KIT, DC WIRING HARNESS	☑	☑	☑	☑	☑	☑	☑	☑	☑	☑	☑	☑	☑	☑	☑	☑	☑	☑	☑	☑	☑	☑	☑	☑	☑	33

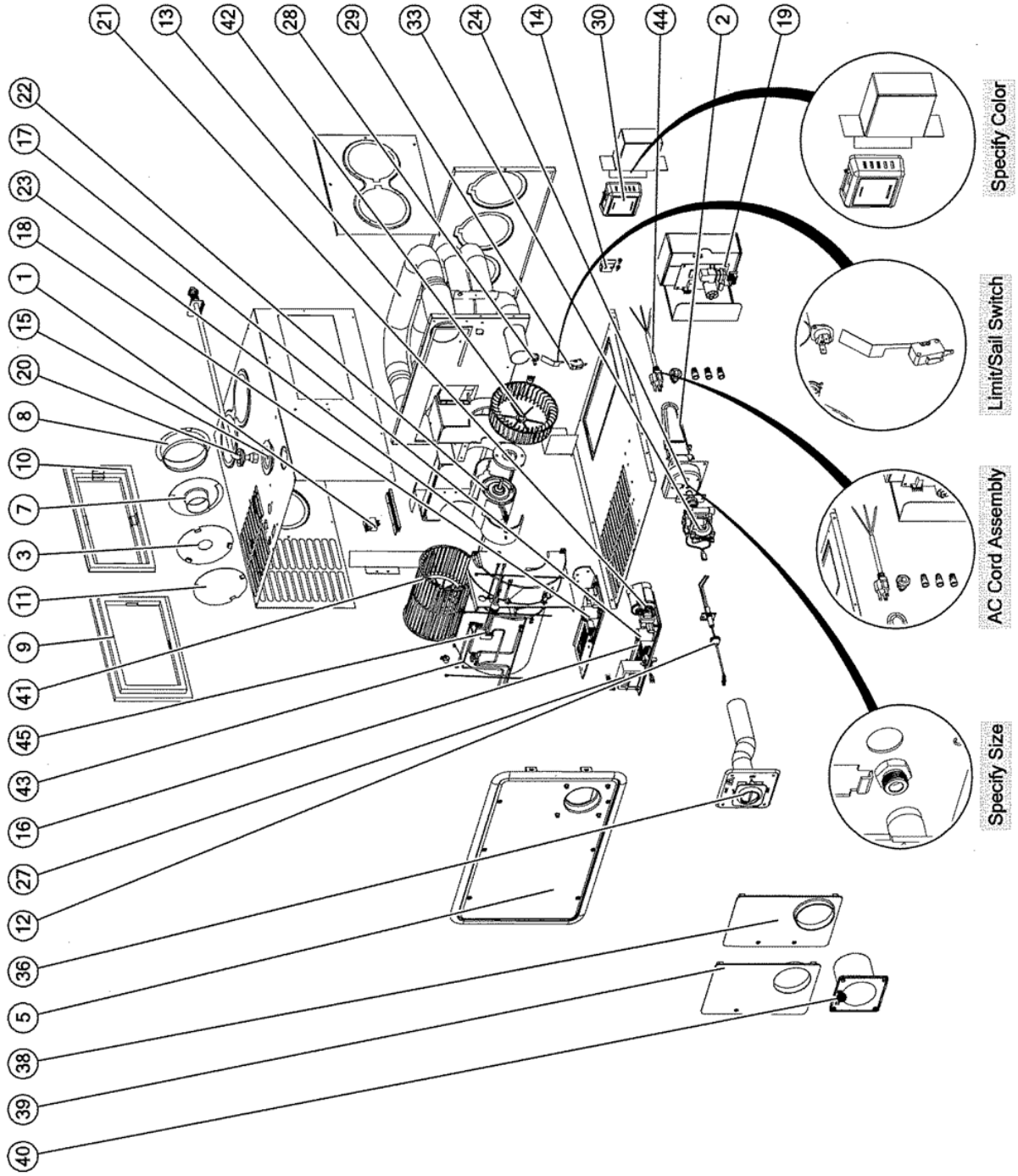
21
13
42
28
29
33
24
14
30
44
2
19
22
17
23
18
1
15
20
8
10
7
3
11
9
41
45
43
16
27
12
36
5
38
39
40
Specify Color
Limit/Sail Switch
AC Cord Assembly
Specify Size

AFL Service Parts

Category	P/N	Description	AFLA35211	AFLA40211	AFLD35111	AFLD40111	AFLA35221	AFLA40221	AFLD35121	AFLD40121	AFLA35231	AFLA40231	AFLD35131	AFLD40131	Ballon
		NS=PART NOT SHOW													
Breaker, Circuit															
	34015	CIRCUIT BREAKER/ON-OFF SWITCH	☐	☐	☑	☑	☐	☐	☑	☑	☐	☐	☑	☑	1
	32345	KIT, C/B/ON-OFF SWITCH	☐	☐	☑	☑	☐	☐	☑	☑	☐	☐	☑	☑	1
Burners															
	30209	KIT, BURNER HEAD LP/NAT GAS	☑	☑	☑	☑	☑	☑	☑	☑	☑	☑	☑	☑	2
	31089	KIT, COMBUSTION AIR RESTRICTOR	☑	☑	☐	☐	☑	☑	☐	☐	☑	☑	☐	☐	3
Doors															
	30487	KIT, DOOR L #34 ARCTIC WHITE L	☑	☑	☑	☑	☐	☐	☐	☐	☑	☑	☑	☑	4
	30499	KIT, DOOR L #44 BLACK L	☑	☑	☑	☑	☐	☐	☐	☐	☑	☑	☑	☑	4
	31845	KIT, DOOR L-F #34 ARTIC WHITE	☑	☑	☑	☑	☐	☐	☐	☐	☑	☑	☑	☑	5
	31861	KIT, DOOR L-F #44 BLACK	☑	☑	☑	☑	☐	☐	☐	☐	☑	☑	☑	☑	5
Ducting															
	36688	ADAPTER,DUCT,2 INCH	☑	☑	☑	☑	☑	☑	☑	☑	☑	☑	☑	☑	7
	31474	ADAPTER,DUCT,4 INCH	☑	☑	☑	☑	☑	☑	☑	☑	☑	☑	☑	☑	8
	30205	KIT, ADAPTER PLATE SIDE DISCH	☑	☑	☑	☑	☑	☑	☑	☑	☑	☑	☑	☑	9
	30261	KIT, BOTTOM PLATE ADAPTER ASM	☑	☑	☑	☑	☑	☑	☑	☑	☑	☑	☑	☑	10
	31361	PLATE, DUCT COVER, 4 INCH	☑	☑	☑	☑	☑	☑	☑	☑	☑	☑	☑	☑	11
Electrode															
	35100	KIT, ELECTRODE ASM SML	☑	☑	☑	☑	☑	☑	☑	☑	☑	☑	☑	☑	12
Elements															
	35707	KIT, HEAT EXCHANGER L	☑	☑	☑	☑	☑	☑	☑	☑	☑	☑	☑	☑	13
General Parts															
	31244	KIT, CASING LEG	☑	☑	☑	☑	☑	☑	☑	☑	☑	☑	☑	☑	14
	35706	KIT, GAS LINE GROMMET	☑	☑	☑	☑	☑	☑	☑	☑	☑	☑	☑	☑	15
Igniton, Controls															
	31243	KIT, BRACKET, AC DSI L	☑	☑	☐	☐	☑	☑	☐	☐	☑	☑	☐	☐	16
	30621	KIT, DSI BOARD AFL AC	☑	☑	☐	☐	☑	☑	☐	☐	☑	☑	☐	☐	17
	32354	KIT, DSI BOARD AFL AC SMT	☑	☑	☐	☐	☑	☑	☐	☐	☑	☑	☐	☐	17
	30627	KIT,DSI BOARD AFL DC	☐	☐	☑	☑	☐	☐	☑	☑	☐	☐	☑	☑	18
	32352	KIT,DSI BOARD AFL DC SMT	☐	☐	☑	☑	☐	☐	☑	☑	☐	☐	☑	☑	18
	31501	KIT,UNIVERSAL IGNITION DC	☐	☐	☑	☑	☐	☐	☑	☑	☐	☐	☑	☑	19
	32353	KIT,UNIVERSAL IGNITION DC SMT	☐	☐	☑	☑	☐	☐	☑	☑	☐	☐	☐	☑	14
Manifold															
	35712	KIT, MANIFOLD EXT ASM SML	☐	☐	☐	☐	☑	☑	☑	☑	☑	☑	☑	☑	20
Motors															
	34039	CPCTR,4UF 370VAC 10%	☑	☑	☐	☐	☑	☑	☐	☐	☑	☑	☐	☐	21
	30710	KIT MOTOR AC AL35-40	☑	☑	☐	☐	☑	☑	☐	☐	☑	☑	☐	☐	22
	30720	KIT, MOTOR L35-40 M35	☐	☐	☑	☑	☐	☐	☑	☑	☐	☐	☑	☑	23
Orifices															
	30861	KIT, ORIFICE #30 NAT	☐	☑	☐	☐	☐	☑	☐	☐	☐	☑	☐	☐	24
	30887	KIT, ORIFICE #48 LP	☐	☐	☐	☑	☐	☐	☐	☑	☐	☐	☐	☑	24
	31077	KIT, ORIFICE #49 LP	☐	☑	☐	☐	☐	☑	☐	☐	☐	☑	☐	☐	24
	31078	KIT, ORIFICE #50 LP	☐	☐	☑	☐	☐	☐	☑	☐	☐	☐	☑	☐	24
	31080	KIT, ORIFICE #51 LP	☑	☐	☐	☐	☑	☐	☐	☐	☑	☐	☐	☐	24
	31088	KIT, ORIFICE 3.0MM LP	☑	☐	☐	☐	☑	☐	☐	☐	☑	☐	☐	☐	24

AFL Service Parts

Category	P/N	Description NS=PART NOT SHOW	AFLA35211	AFLA40211	AFLD35111	AFLD40111	AFLA35221	AFLA40221	AFLD35121	AFLD40121	AFLA35231	AFLA40231	AFLD35131	AFLD40131	Ballon
	30216	KIT,CONVERSION 35K LA	☑	☐	☐	☐	☑	☐	☐	☐	☑	☐	☐	☐	NS
	30219	KIT,CONVERSION 40K LA	☐	☑	☐	☐	☐	☑	☐	☐	☐	☑	☐	☐	NS
Power Supplies															
	31095	KIT, TRANSFORMER AC	☑	☑	☐	☐	☑	☑	☐	☐	☑	☑	☐	☐	27
Switches															
	31092	KIT, SWITCH ON/OFF	☑	☑	☐	☐	☑	☑	☐	☐	☑	☑	☐	☐	NS
Switches, Limit															
	31091	KIT, LIMIT SWITCH 190	☑	☑	☑	☑	☑	☑	☑	☑	☑	☑	☑	☑	28
Switches, Sail															
	31094	KIT, SAIL SWITCH SML	☑	☑	☑	☑	☑	☑	☑	☑	☑	☑	☑	☑	29
Thermostats															
	32300	THERMOSTAT,HEAT ONLY,BLACK	☑	☑	☑	☑	☑	☑	☑	☑	☑	☑	☑	☑	30
	38452	THERMOSTAT,HEAT ONLY,BROWN	☑	☑	☑	☑	☑	☑	☑	☑	☑	☑	☑	☑	30
	38453	THERMOSTAT,HEAT ONLY,WHITE	☑	☑	☑	☑	☑	☑	☑	☑	☑	☑	☑	☑	30
Valves															
	31098	KIT, VALVE 12VDC TOP SML	☐	☐	☑	☑	☐	☐	☑	☑	☐	☐	☑	☑	33
	31099	KIT, VALVE 24VAC TOP LA	☑	☑	☐	☐	☑	☑	☐	☐	☑	☑	☐	☐	33
Vent, Exhaust															
	31777	KIT, DOOR VENT ASM .875 V4	☐	☐	☑	☐	☐	☐	☐	☐	☐	☐	☑	☐	37
	31812	KIT, DOOR VENT ASM .930 V4	☑	☐	☐	☐	☐	☐	☐	☐	☑	☐	☐	☐	37
	31809	KIT, DOOR VENT ASM 1.10 V4	☐	☑	☐	☑	☐	☐	☐	☐	☐	☑	☐	☑	37
	30582	KIT, LD VENT .875 V3	☐	☐	☐	☐	☐	☐	☑	☐	☐	☐	☐	☐	37
	31271	KIT, LD VENT .875 V4	☐	☐	☐	☐	☐	☐	☑	☐	☐	☐	☐	☐	37
	32299	KIT, LD VENT .875 V4 LW	☐	☐	☐	☐	☐	☐	☑	☐	☐	☐	☐	☐	37
	30937	KIT, LD VENT .875 V4 MW	☐	☐	☐	☐	☐	☐	☑	☐	☐	☐	☐	☐	37
	32332	KIT, LD VENT .93 V4 LW	☐	☐	☐	☐	☑	☐	☐	☐	☐	☐	☐	☐	37
	30584	KIT, LD VENT .930 V3	☐	☐	☐	☐	☑	☐	☑	☐	☐	☐	☐	☐	37
	31274	KIT, LD VENT .930 V4	☐	☐	☐	☐	☑	☐	☐	☐	☐	☐	☐	☐	37
	31273	KIT, LD VENT 1.10 V4	☐	☐	☐	☐	☐	☑	☐	☑	☐	☐	☐	☐	37
	32311	KIT, LD VENT 1.10 V4 LW	☐	☐	☐	☐	☐	☑	☐	☑	☐	☐	☐	☐	37
	30940	KIT, LD VENT 1.10 V4 MLW	☐	☐	☐	☐	☐	☑	☐	☑	☐	☐	☐	☐	37
	30583	KIT, LD VENT 1.100 V3	☐	☐	☐	☐	☐	☑	☐	☑	☐	☐	☐	☐	37
	30457	VENT PANEL EXTENSION SML V3	☐	☐	☐	☐	☑	☑	☑	☑	☐	☐	☐	☐	39
	30611	VENT PANEL EXTENSION SML V4	☐	☐	☐	☐	☑	☑	☑	☑	☐	☐	☐	☐	40
Wheels															
	33126	KIT, BLOWER WHEEL & CLAMP	☑	☑	☑	☑	☑	☑	☑	☑	☑	☑	☑	☑	39
	30619	KIT, COMBUSTION WHEEL L	☑	☑	☑	☑	☑	☑	☑	☑	☑	☑	☑	☑	40
Wiring															
	31123	KIT, AC WIRING HARNESS L	☑	☑	☐	☐	☑	☑	☐	☐	☑	☑	☐	☐	41
	30623	KIT, CORD ASM AFL	☑	☑	☐	☐	☑	☑	☐	☐	☑	☑	☐	☐	42
	31114	KIT, DC WIRING HARNESS	☐	☐	☑	☑	☐	☐	☑	☑	☐	☐	☑	☑	43

7900-II / 8012-II Series Furnace Parts

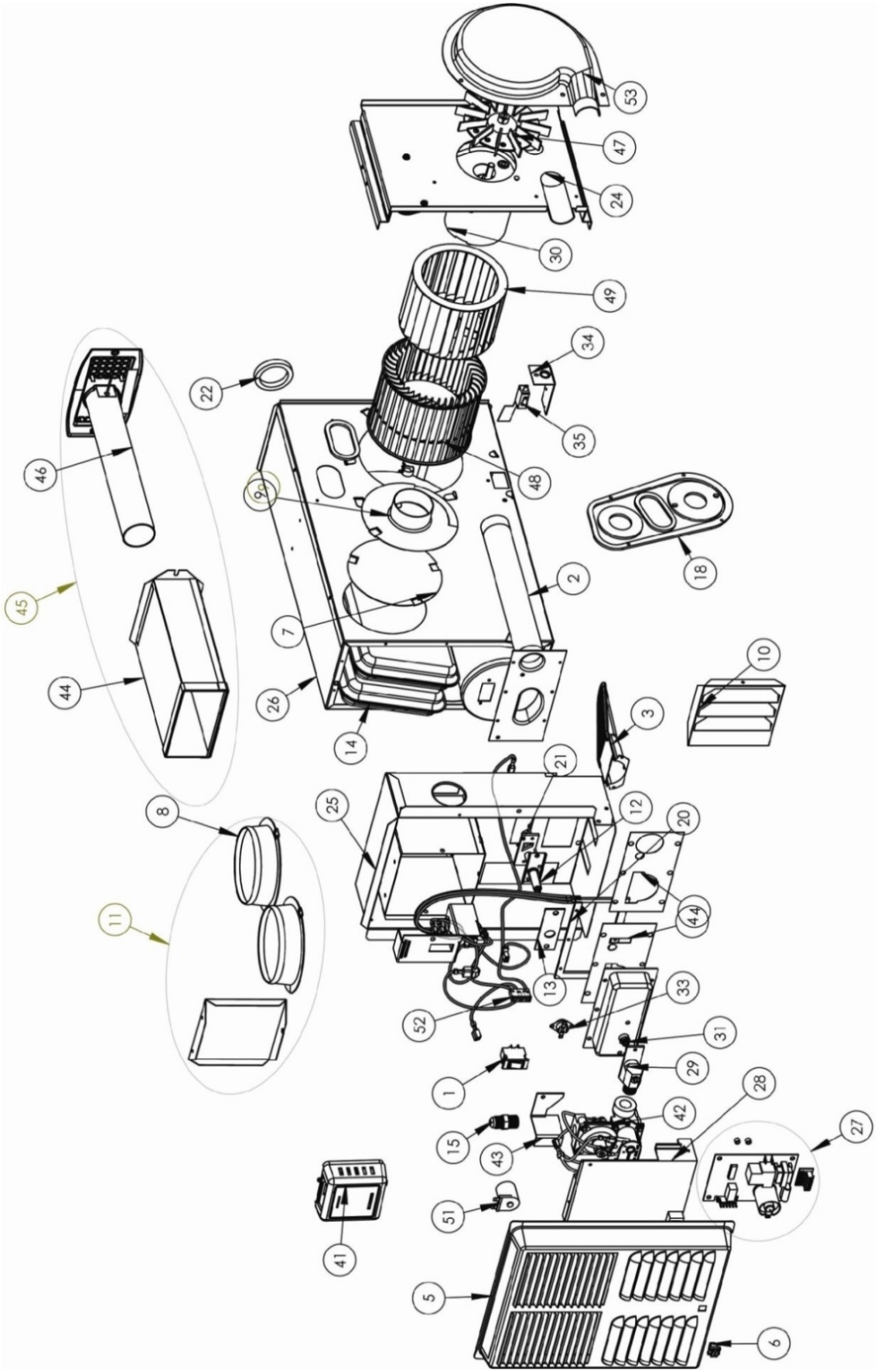

7900 - 8012 Service Parts

Category	P/N	Descriptions NS = PART NOT SHOWN	8012	7912	7916	7920	8012_II	7912_II	7916_II	7920_II	Balloon
Orifices											
	31083	KIT, ORIFICE #56 LP	☐	☐	☑	☐	☐	☐	☑	☐	
	31087	KIT, ORIFICE #62 LP	☐	☑	☐	☐	☐	☑	☐	☐	
	30789	KIT, ORIFICE 1.25MM LP	☐	☐	☐	☑	☐	☐	☐	☑	
Igniton, Controls											
	31501	KIT,UNIVERSAL IGNITION DC	☑	☑	☑	☑	☑	☑	☑	☑	*27*
	32353	KIT,UNIVERSAL IGNITION DC SMT	☑	☑	☑	☑	☑	☑	☑	☑	
Wheels											
	33124	KIT,COMBUSTION WHEEL 79/80	☑	☑	☑	☑	☑	☑	☑	☑	*47*
	33431	WHEEL,BLOWER 80	☑	☐	☐	☐	☑	☐	☐	☐	*49*
Vent, Exhaust											
	35955	KIT,VENT A, 79-II, ALUMINIZED	☐	☐	☐	☐	☑	☑	☑	☑	*45*
	35956	KIT,VENT B, 79-II, ALUMINIZED	☐	☐	☐	☐	☑	☑	☑	☑	*45*
	35957	KIT,VENT C, 79-II, ALUMINIZED	☐	☐	☐	☐	☑	☑	☑	☑	*45*
Electrode											
	37517	ELECTRODE, CHF2 ASSY	☐	☐	☐	☐	☑	☑	☑	☑	*12*
	36998	ELECTRODE, CHF4 ASSY	☐	☐	☐	☐	☑	☑	☑	☑	*12*
	33234	KIT,76/79,ELECTRODE	☑	☑	☑	☑	☐	☐	☐	☐	*NS*
Gasket											
	35890	GASKET,79/80,BURNER PLATE	☐	☐	☐	☐	☑	☑	☑	☑	*20*
	32172	GASKET,ELECTRODE	☑	☑	☑	☑	☑	☑	☑	☑	*NS*
	37100	GASKET,ELECTRODE,SINGLE SENSE	☐	☐	☐	☐	☑	☑	☑	☑	*21*
Elements											
	35903	WELD,79/80,CHAMBER	☐	☐	☐	☐	☑	☑	☑	☑	*14*
Motors											
	31036	MOTOR, 79	☐	☑	☑	☑	☐	☑	☑	☑	*30*
	36122	MOTOR, 8012	☐	☐	☐	☐	☑	☐	☐	☐	*30*
Thermostats											
	32300	THERMOSTAT,HEAT ONLY,BLACK	☑	☑	☑	☑	☑	☑	☑	☑	
	38452	THERMOSTAT,HEAT ONLY,BROWN	☑	☑	☑	☑	☑	☑	☑	☑	*41*
	38453	THERMOSTAT,HEAT ONLY,WHITE	☑	☑	☑	☑	☑	☑	☑	☑	*41*
Valves											
	38604	VALVE,SIDE OUTLET, 12VDC COIL	☐	☐	☐	☐	☑	☑	☑	☑	*42*
Wiring											
	34116	WIRE ASSY,HIGH TENSION 7 IN	☑	☑	☑	☑	☑	☑	☑	☑	*NS*
Doors											
	34271	DOOR ASSY,79/80 FRAME BLK #44	☐	☐	☐	☐	☑	☑	☑	☑	*5*
	37912	FASTENER,1/4-TURN, NYLATCH	☐	☐	☐	☐	☑	☑	☑	☑	*6*
Switches, Limit											
	37021	SWITCH,LIMIT 36TXV11,L170 TOD	☐	☐	☐	☐	☑	☑	☑	☑	*33*
Ducting											
	36688	ADAPTER,DUCT,2 INCH	☑	☑	☑	☑	☑	☑	☑	☑	*9*
	31474	ADAPTER,DUCT,4 INCH	☑	☑	☑	☑	☑	☑	☑	☑	*8*
	36959	DIRECTIONAL AIR BOX	☐	☐	☐	☐	☑	☑	☑	☑	*10*
	37452	KIT,79/80-II,SIDE DISCHARGE	☐	☐	☐	☐	☑	☑	☑	☑	*11*

7900 - 8012 Service Parts

Category	P/N	Descriptions NS = PART NOT SHOWN	8012	7912	7916	7920	8012_II	7912_II	7916_II	7920_II	Balloon
	31361	PLATE, DUCT COVER, 4 INCH	☑	☑	☑	☑	☑	☑	☑	☑	*7*
Switches, Sail											
	36680	SWITCH,SAIL, D41JRGAA	☐	☐	☐	☐	☑	☑	☑	☑	
	36134	SWITCH,SAIL, D41RGAB	☐	☐	☐	☐	☑	☐	☐	☐	*35*
General Parts											
	37951	BRACKET, DSI MOUNTING, PLASTIC	☑	☑	☑	☑	☑	☑	☑	☑	*28*
	35892	BURNER AIR TUBE 79/80	☐	☐	☐	☐	☑	☑	☑	☑	*2*

8500-IV LD & 2-Stage Series Furnace Parts

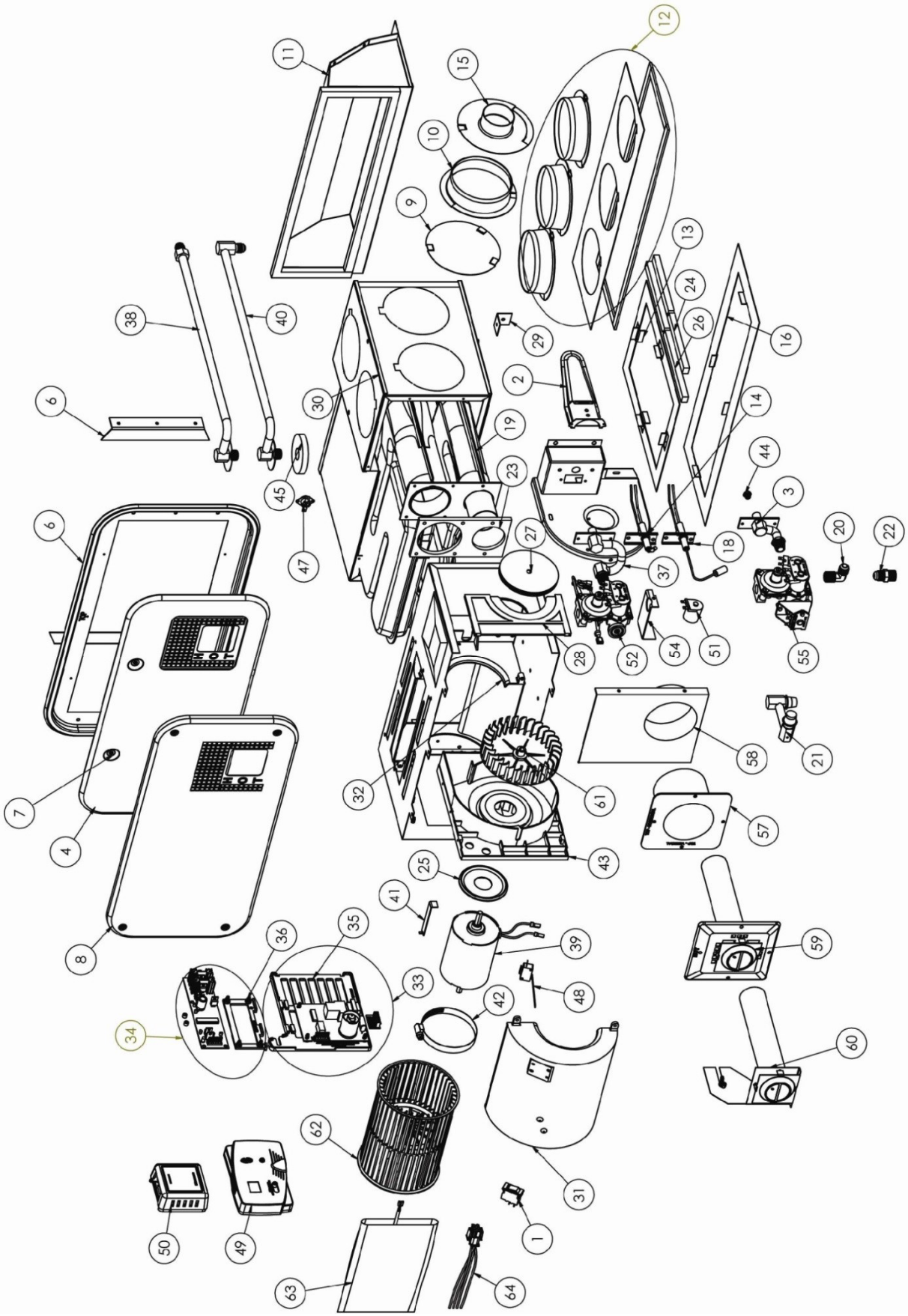

8500 Service Parts

Category	P/N	Descriptions NS = PART NOT SHOWN	8516	8520	8525	8531	8535	8516_II	8520_II	8525_II	8531_II	8535_II	8516_III	8520_III	8525_III	8531_III	8535_III	8516_IV	8520_IV	8525_IV	8531_IV	8535_IV	8516_LD	8520_LD	8525_LD	8531_LD	8535_LD	1522	1522_LD	2334	2334_LD	Ballon
Breaker, Circuit																																
	34015	CIRCUIT BREAKER/ON-OFF SWITCH	☐	☐	☐	☐	☐	☐	☐	☐	☐	☐	☐	☐	☐	☐	☐	☐	☐	☐	☐	☐	☐	☐	☐	☐	☐	☐	☐	☐	☑	1
	33781	KIT,W28 REPLACEMENT 10AMP C/B	☐	☐	☐	☐	☐	☐	☐	☐	☐	☐	☐	☐	☑	☑	☐	☐	☐	☐	☐	☐	☐	☐	☐	☐	☐	☐	☐	☐	☐	NS
	33782	KIT,W28 REPLACEMENT 15AMP C/B	☐	☐	☐	☐	☐	☐	☐	☐	☐	☐	☐	☐	☐	☐	☑	☐	☐	☐	☐	☐	☐	☐	☐	☑	☐	☑	☑	☐	☐	NS
	33780	KIT,W28 REPLACEMENT 7AMP C/B	☐	☐	☑	☐	☐	☐	☐	☑	☐	☐	☑	☑	☐	☐	☐	☐	☐	☐	☐	☐	☐	☐	☐	☐	☐	☐	☐	☐	☐	NS
Doors																																
	30120	85/89 RECESS PAN ASSY 44 1-PK	☐	☐	☐	☐	☐	☐	☐	☐	☐	☐	☐	☐	☐	☐	☐	☑	☑	☑	☑	☑	☐	☐	☐	☐	☐	☑	☐	☑	☐	
	33847	ASSY,85-II,DOOR LATCH,N/S	☐	☐	☐	☐	☐	☑	☑	☑	☑	☑	☑	☑	☑	☑	☑	☑	☑	☑	☑	☑	☐	☐	☐	☐	☐	☑	☐	☑	☐	7
	37117	BEZEL,ECONOMY PLASTIC STD DOOR	☐	☐	☐	☐	☐	☐	☐	☐	☐	☐	☐	☐	☐	☐	☐	☑	☑	☑	☑	☑	☐	☐	☐	☐	☐	☑	☐	☑	☐	
	36129	DOOR ASSY, DELUXE, #34 1-PK	☐	☐	☐	☐	☐	☑	☑	☑	☑	☑	☑	☑	☑	☑	☑	☑	☑	☑	☑	☑	☐	☐	☐	☐	☐	☑	☐	☑	☐	8
	34238	DOOR ASSY, DELUXE, 44 1-PK	☐	☐	☐	☐	☐	☑	☑	☑	☑	☑	☑	☑	☑	☑	☑	☑	☑	☑	☑	☑	☐	☐	☐	☐	☐	☑	☐	☑	☐	
	36942	DOOR ASSY, STANDARD, #34 1-PK	☐	☐	☐	☐	☐	☑	☑	☑	☑	☑	☑	☑	☑	☑	☑	☑	☑	☑	☑	☑	☐	☐	☐	☐	☐	☑	☐	☑	☐	8
	34237	DOOR ASSY, STANDARD, #44 1-PK	☐	☐	☐	☐	☐	☑	☑	☑	☑	☑	☑	☑	☑	☑	☑	☑	☑	☑	☑	☑	☐	☐	☐	☐	☐	☑	☐	☑	☐	8
Ducting																																
	36688	ADAPTER,DUCT,2 INCH	☑	☑	☑	☑	☑	☑	☑	☑	☑	☑	☑	☑	☑	☑	☑	☑	☑	☑	☑	☑	☑	☑	☑	☑	☑	☑	☑	☑	☑	15
	31474	ADAPTER,DUCT,4 INCH	☑	☑	☑	☑	☑	☑	☑	☑	☑	☑	☑	☑	☑	☑	☑	☑	☑	☑	☑	☑	☑	☑	☑	☑	☑	☑	☑	☑	☑	10
	37878	ASSY,EXT BOX ADAPTER 2-GASKETS	☐	☐	☐	☐	☐	☐	☐	☐	☐	☐	☑	☑	☑	☑	☑	☑	☑	☑	☑	☑	☑	☑	☑	☑	☑	☑	☑	☑	☑	11
	31361	PLATE, DUCT COVER, 4 INCH	☑	☑	☑	☑	☑	☑	☑	☑	☑	☑	☑	☑	☑	☑	☑	☑	☑	☑	☑	☑	☑	☑	☑	☑	☑	☑	☑	☑	☑	9
Electrode																																
	37057	ELECTRODE, CHF1 ASSY	☐	☐	☐	☐	☐	☐	☐	☐	☐	☐	☑	☑	☑	☑	☑	☑	☑	☑	☑	☑	☐	☐	☐	☐	☐	☑	☐	☑	☐	14
	36997	ELECTRODE, CHF3 ASSY	☐	☐	☐	☐	☐	☐	☐	☐	☐	☐	☑	☑	☑	☑	☑	☐	☐	☐	☐	☐	☐	☐	☐	☐	☐	☐	☐	☐	☐	NS
	36999	ELECTRODE, CHF5 ASSY	☑	☑	☑	☑	☑	☑	☑	☑	☑	☑	☐	☐	☐	☐	☐	☐	☐	☐	☐	☐	☐	☐	☐	☐	☐	☐	☐	☐	☐	NS
Elements																																
	37958	WELD,ELEMENT W/EXHAUST 16-25	☐	☐	☐	☐	☐	☐	☐	☐	☐	☐	☐	☐	☐	☐	☐	☑	☑	☑	☐	☐	☐	☐	☐	☐	☐	☑	☐	☐	☐	19
	34449	WELD,ELEMENT W/EXHAUST 16-25	☐	☐	☐	☐	☐	☐	☐	☐	☐	☐	☐	☐	☐	☐	☐	☐	☐	☐	☐	☐	☑	☑	☑	☐	☐	☐	☑	☐	☐	19
	37959	WELD,ELEMENT W/EXHAUST 31-35	☐	☐	☐	☐	☐	☐	☐	☐	☐	☐	☐	☐	☐	☐	☐	☐	☐	☐	☑	☑	☐	☐	☐	☐	☐	☐	☐	☑	☐	19
	34450	WELD,ELEMENT W/EXHAUST 31-35	☐	☐	☐	☐	☐	☐	☐	☐	☐	☐	☐	☐	☐	☐	☐	☐	☐	☐	☐	☐	☐	☐	☑	☑	☐	☐	☐	☐	☑	19
Gasket																																
	32841	GASKET MOTOR 85	☑	☑	☑	☑	☑	☑	☑	☑	☑	☑	☑	☑	☑	☑	☑	☐	☐	☐	☐	☐	☐	☐	☐	☐	☐	☐	☐	☐	☐	
	32172	GASKET,ELECTRODE	☑	☑	☑	☑	☑	☑	☑	☑	☑	☑	☐	☐	☐	☐	☐	☐	☐	☐	☐	☐	☐	☐	☐	☐	☐	☐	☐	☐	☐	NS
	37956	GASKET,EXHAUST WALL	☑	☑	☑	☑	☑	☑	☑	☑	☑	☑	☑	☑	☑	☑	☑	☑	☑	☑	☑	☑	☑	☑	☑	☑	☑	☑	☑	☑	☑	23
	37713	GASKET,MOTOR,89 DC,AC	☐	☐	☐	☐	☐	☐	☐	☐	☐	☐	☐	☐	☐	☐	☐	☐	☐	☐	☐	☐	☑	☑	☑	☑	☑	☐	☑	☐	☑	45

8500 Service Parts

Category	P/N	Descriptions NS = PART NOT SHOWN	8516	8520	8525	8531	8535	8516_II	8520_II	8525_II	8531_II	8535_II	8516_III	8520_III	8525_III	8531_III	8535_III	8516_IV	8520_IV	8525_IV	8531_IV	8535_IV	8516_LD	8520_LD	8525_LD	8531_LD	8535_LD	1522	1522_LD	2334	2334_LD	Ballon
General Parts																																
	37606	HOUSING, BLOWER 85-IV																✓	✓	✓	✓	✓	✓	✓	✓	✓	✓	✓	✓	✓	✓	32
	37605	HOUSING, BLOWER BACK 85-IV																✓	✓	✓	✓	✓	✓	✓	✓	✓	✓	✓	✓	✓	✓	31
	37411	PLATE,85,SLIDE,S/O											✓	✓	✓	✓	✓	✓	✓	✓	✓	✓						✓		✓		28
	37410	PLUG,85/89,S/O GAS INLET											✓	✓	✓	✓	✓	✓	✓	✓	✓	✓						✓		✓		27
Igniton, Controls																																
	34543	BRACKET, DSI AUXILIARY,PLASTIC																										✓	✓	✓	✓	36
	34541	BRACKET, DSI DC MOUNT, PLASTIC						✓	✓	✓	✓	✓	✓	✓	✓	✓	✓	✓	✓	✓	✓	✓	✓	✓	✓	✓	✓	✓	✓	✓	✓	35
	34696	KIT,DSI BOARD 2-STAGE REPLACE																										✓	✓	✓	✓	33
	31501	KIT,UNIVERSAL IGNITION DC	✓	✓	✓	✓	✓	✓	✓	✓	✓	✓	✓	✓	✓	✓	✓	✓	✓	✓	✓	✓	✓	✓	✓	✓	✓					33
	32353	KIT,UNIVERSAL IGNITION DC SMT											✓	✓	✓	✓	✓	✓	✓	✓	✓	✓	✓	✓	✓	✓	✓					
Manifold																																
	34530	MANIFOLD, EXTENDED 85 LD2																					✓	✓	✓	✓	✓		✓		✓	38
	37392	MANIFOLD, W/R 85/89-III											✓	✓	✓	✓	✓	✓	✓	✓	✓	✓						✓		✓		3
Motors																																
	37360	KIT,SERVICE MOTOR BRKT 85/89	✓	✓	✓	✓	✓	✓	✓	✓	✓	✓	✓	✓	✓	✓	✓															NS
	37359	KIT,SERVICE MOTOR W/LEADS											✓	✓																		NS
	37358	KIT,SERVICE MOTOR W/LEADS 8525													✓																	NS
	37357	KIT,SERVICE MOTOR W/LEADS85/89														✓	✓															NS
	38554	MOTOR, 2 STAGE 15/22																										✓	✓			39
	37964	MOTOR, 2 STAGE 23/34, 25/40																												✓	✓	39
	37696	MOTOR, 8516-20																✓	✓				✓	✓								39
	33219	MOTOR, 8516-20	✓	✓				✓	✓																							39
	32774	MOTOR, 8525			✓					✓																						39
	37697	MOTOR, 8525-31																		✓	✓				✓	✓						39
	33589	MOTOR, 8531-35									✓	✓																				39
	37698	MOTOR, 8535																			✓						✓					39
Orifices																																
	31080	KIT, ORIFICE #51 LP																												✓	✓	
	31081	KIT, ORIFICE #52 LP																			✓					✓						
	31082	KIT, ORIFICE #54 LP																										✓	✓			
	31083	KIT, ORIFICE #56 LP																✓					✓									

8500 Service Parts

Category	P/N	Descriptions NS = PART NOT SHOWN	8516	8520	8525	8531	8535	8516_II	8520_II	8525_II	8531_II	8535_II	8516_III	8520_III	8525_III	8531_III	8535_III	8516_IV	8520_IV	8525_IV	8531_IV	8535_IV	8516_LD	8520_LD	8525_LD	8531_LD	8535_LD	1522	1522_LD	2334	2334_LD	Ballon
	30789	KIT, ORIFICE 1.25MM LP	☐	☐	☐	☐	☐	☐	☐	☐	☐	☐	☐	☑	☐	☐	☐	☐	☑	☐	☐	☐	☐	☑	☐	☐	☐	☐	☐	☐	☐	
	30845	KIT, ORIFICE 1.45MM LP	☐	☐	☐	☐	☐	☐	☐	☐	☐	☐	☐	☐	☐	☐	☐	☐	☐	☑	☐	☐	☐	☐	☑	☐	☐	☐	☐	☐	☐	
Switches, Limit																																
	37022	SWITCH,LIMIT 36TXV11,L190 TOD	☐	☐	☐	☐	☐	☐	☐	☐	☐	☐	☑	☑	☑	☑	☑	☑	☑	☑	☑	☑	☑	☑	☑	☑	☑	☑	☑	☑	☑	47
	32927	SWITCH,LIMIT 60T11-312745	☑	☑	☑	☑	☑	☐	☐	☐	☐	☐	☐	☐	☐	☐	☐	☐	☐	☐	☐	☐	☐	☐	☐	☐	☐	☐	☐	☐	☐	
	35132	SWITCH,LIMIT INT01L-1441	☐	☐	☐	☐	☐	☑	☑	☑	☑	☑	☐	☐	☐	☐	☐	☐	☐	☐	☐	☐	☐	☐	☐	☐	☐	☐	☐	☐	☐	47
Switches, Sail																																
	36680	SWITCH,SAIL, D41JRGAA	☐	☐	☐	☐	☐	☑	☑	☑	☑	☑	☑	☑	☑	☑	☑	☑	☑	☑	☑	☑	☑	☑	☑	☑	☑	☑	☑	☑	☑	48
Thermostats																																
	38535	THERMOSTAT,2 STAGE-DM/RVP WHT	☐	☐	☐	☐	☐	☐	☐	☐	☐	☐	☐	☐	☐	☐	☐	☐	☐	☐	☐	☐	☐	☐	☐	☐	☑	☑	☑	☑	49
	38555	THERMOSTAT,DIGITAL 12VDC 1H/2C	☑	☑	☑	☑	☑	☑	☑	☑	☑	☑	☑	☑	☑	☑	☑	☑	☑	☑	☑	☑	☑	☑	☑	☑	☑	☐	☐	☐	☐	49
	38452	THERMOSTAT,HEAT ONLY,BROWN	☑	☑	☑	☑	☑	☑	☑	☑	☑	☑	☑	☑	☑	☑	☑	☑	☑	☑	☑	☑	☑	☑	☑	☑	☑	☐	☐	☐	☐	50
	38453	THERMOSTAT,HEAT ONLY,WHITE	☑	☑	☑	☑	☑	☑	☑	☑	☑	☑	☑	☑	☑	☑	☑	☑	☑	☑	☑	☑	☑	☑	☑	☑	☑	☐	☐	☐	☐	50
Valves																																
	31150	KIT, VALVE SIDE OUTLET, 12VDC	☐	☐	☐	☐	☐	☐	☐	☐	☐	☐	☑	☑	☑	☑	☑	☑	☑	☑	☑	☑	☐	☐	☐	☐	☐	☑	☐	☑	☐	NS
	31155	KIT, VALVE STRAIGHT, 12VDC	☐	☐	☐	☐	☐	☐	☐	☐	☐	☐	☐	☐	☐	☐	☐	☐	☐	☐	☐	☐	☑	☑	☑	☑	☑	☐	☐	☐	☐	
	38602	VALVE,2 STAGE, 12VDC COILS	☐	☐	☐	☐	☐	☐	☐	☐	☐	☐	☐	☐	☐	☐	☐	☐	☐	☐	☐	☐	☐	☐	☐	☐	☐	☑	☑	☐	☐	55
	38605	VALVE,2 STAGE, 12VDC COILS	☐	☐	☐	☐	☐	☐	☐	☐	☐	☐	☐	☐	☐	☐	☐	☐	☐	☐	☐	☐	☐	☐	☐	☐	☐	☐	☐	☑	☑	55
	38604	VALVE,SIDE OUTLET, 12VDC COIL	☐	☐	☐	☐	☐	☐	☐	☐	☐	☐	☑	☑	☑	☑	☑	☑	☑	☑	☑	☑	☑	☑	☑	☑	☑	☐	☐	☐	☐	52
	38607	VALVE,STRAIGHT, 12VDC COIL	☑	☑	☑	☑	☑	☑	☑	☑	☑	☑	☑	☑	☑	☑	☑	☐	☐	☐	☐	☐	☐	☐	☐	☐	☐	☐	☐	☐	☐	NS
Vent, Exhaust																																
	34422	ASSY,VENT 3/8 LD2	☐	☐	☐	☐	☐	☐	☐	☐	☐	☐	☐	☐	☐	☐	☐	☐	☐	☐	☐	☐	☐	☐	☑	☑	☑	☐	☑	☐	☑	59
	34423	ASSY,VENT 5/8 LD2	☐	☐	☐	☐	☐	☐	☐	☐	☐	☐	☐	☐	☐	☐	☐	☐	☐	☐	☐	☐	☑	☑	☐	☐	☐	☐	☐	☐	☐	59
	34410	INTAKE AIR ADAPTER LD2	☐	☐	☐	☐	☐	☐	☐	☐	☐	☐	☐	☐	☐	☐	☐	☐	☐	☐	☐	☐	☑	☑	☑	☑	☑	☐	☑	☐	☑	57
	38139	KIT,DRAFT SHIELD 16 & 20	☐	☐	☐	☐	☐	☐	☐	☐	☐	☐	☑	☑	☐	☐	☐	☑	☑	☐	☐	☐	☐	☐	☐	☐	☐	☐	☐	☐	☐	NS
	38141	KIT,DRAFT SHIELD 25, 31 & 35	☐	☐	☐	☐	☐	☐	☐	☐	☐	☐	☐	☐	☑	☑	☑	☐	☐	☑	☑	☑	☐	☐	☐	☐	☐	☑	☐	☑	☐	NS
Wheels																																
	33126	KIT, BLOWER WHEEL & CLAMP	☐	☐	☐	☐	☐	☐	☐	☐	☐	☐	☑	☑	☑	☑	☑	☑	☑	☑	☑	☑	☑	☑	☑	☑	☑	☑	☑	☑	☑	62
	33128	KIT, COMBUSTION WHEEL	☐	☐	☐	☐	☐	☑	☑	☑	☑	☑	☑	☑	☑	☑	☑	☑	☑	☑	☑	☑	☑	☑	☑	☑	☑	☑	☑	☑	☑	61
	33124	KIT,COMBUSTION WHEEL 79/80	☑	☑	☑	☐	☐	☐	☐	☐	☐	☐	☐	☐	☐	☐	☐	☐	☐	☐	☐	☐	☐	☐	☐	☐	☐	☐	☐	☐	☐	NS
Wiring																																
	36290	ASSY,FIELD PLUG 85-IV	☐	☐	☐	☐	☐	☑	☑	☑	☑	☑	☑	☑	☑	☑	☑	☑	☑	☑	☑	☑	☐	☐	☐	☐	☐	☐	☐	☐	☐	64

8500 Service Parts

Category	P/N	Descriptions NS = PART NOT SHOWN	8516	8520	8525	8531	8535	8516_II	8520_II	8525_II	8531_II	8535_II	8516_III	8520_III	8525_III	8531_III	8535_III	8516_IV	8520_IV	8525_IV	8531_IV	8535_IV	8516_LD	8520_LD	8525_LD	8531_LD	8535_LD	1522	1522_LD	2334	2334_LD	Ballon
	36327	ASSY,FIELD PLUG F/P	☐	☐	☐	☐	☐	☐	☐	☐	☐	☐	☑	☑	☑	☑	☑	☑	☑	☑	☑	☑	☐	☐	☐	☐	☐	☐	☐	☐	☐	64
	30229	KIT, WIRING HARNESS 85DC	☐	☐	☐	☐	☐	☐	☐	☐	☐	☐	☑	☑	☑	☑	☑	☑	☑	☑	☑	☑	☐	☐	☐	☐	☐	☐	☐	☐	☐	
	30007	KIT, WIRING,SERVICE 85/89 DC	☐	☐	☐	☐	☐	☐	☐	☐	☐	☐	☑	☑	☑	☑	☑	☐	☐	☐	☐	☐	☐	☐	☐	☐	☐	☐	☐	☐	☐	63

8900-IV DC & AC - LD & 2-Stage Series Furnace arts

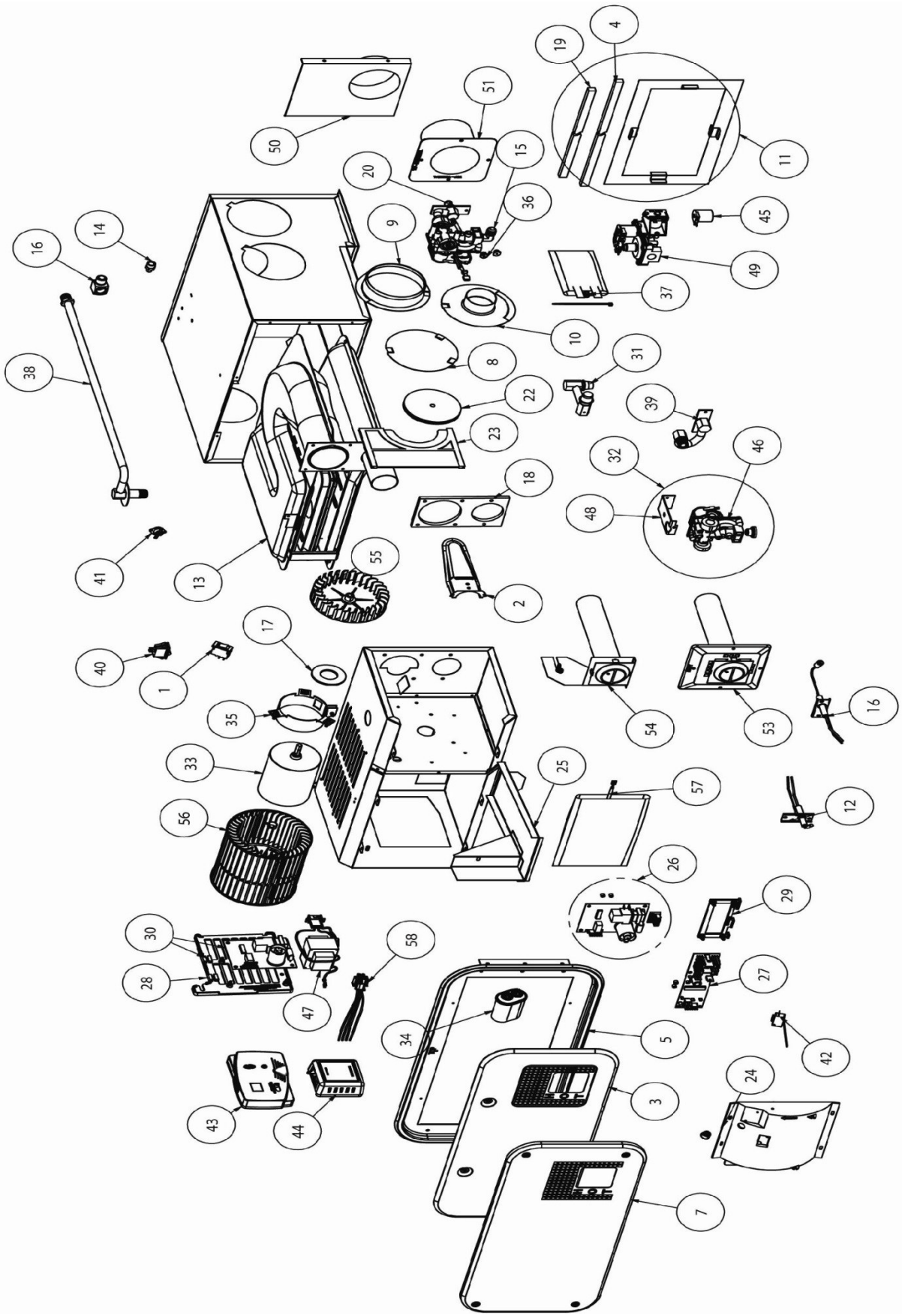

8900 Service Parts

NS = PART NOT SHOWN

Category	P/N	Descriptions	8935_DC	8940_DC	8935_AC	8940_AC	8935_AC_II	8935_DC_II	8940_AC_II	8940_DC_II	8935_DC_III	8940_DC_III	8935_AC_III	8940_AC_III	8935_DC_LD	8940_DC_LD	2540_DC	2540_DC_LD	Ballon
Breaker, Circuit																			
	34015	CIRCUIT BREAKER/ON-OFF SWITCH	☐	☐	☐	☐	☐	☐	☐	☐	☐	☐	☐	☐	☐	☐	☑	☑	1
	33782	KIT,W28 REPLACEMENT 15AMP C/B	☑	☑	☐	☐	☐	☑	☐	☑	☑	☑	☐	☐	☑	☑	☐	☐	1
Burners																			
	38548	KIT,BURNER/ELECTRODE	☑	☑	☑	☑	☐	☐	☐	☐	☐	☐	☐	☐	☐	☐	☐	☐	NS
Doors																			
	30120	85/89 RECESS PAN ASSY 44 1-PK	☐	☐	☐	☐	☐	☐	☐	☐	☑	☑	☑	☑	☐	☐	☑	☐	
	33847	ASSY,85-II,DOOR LATCH,N/S	☑	☑	☑	☑	☑	☑	☑	☑	☑	☑	☑	☑	☐	☐	☑	☐	NS
	37117	BEZEL,ECONOMY PLASTIC STD DOO	☐	☐	☐	☐	☐	☐	☐	☐	☑	☑	☑	☑	☐	☐	☑	☐	
	36129	DOOR ASSY, DELUXE, #34 1-PK	☑	☑	☑	☑	☑	☑	☑	☑	☑	☑	☑	☑	☐	☐	☑	☐	3
	34238	DOOR ASSY, DELUXE, 44 1-PK	☑	☑	☑	☑	☑	☑	☑	☑	☑	☑	☑	☑	☐	☐	☑	☐	
	36942	DOOR ASSY, STANDARD, #34 1-PK	☑	☑	☑	☑	☑	☑	☑	☑	☑	☑	☑	☑	☐	☐	☑	☐	7
	34237	DOOR ASSY, STANDARD, #44 1-PK	☑	☑	☑	☑	☑	☑	☑	☑	☑	☑	☑	☑	☐	☐	☑	☐	7
Ducting																			
	36688	ADAPTER,DUCT,2 INCH	☑	☑	☑	☑	☑	☑	☑	☑	☑	☑	☑	☑	☑	☑	☑	☑	10
	31474	ADAPTER,DUCT,4 INCH	☑	☑	☑	☑	☑	☑	☑	☑	☑	☑	☑	☑	☑	☑	☑	☑	9
	36897	KIT, ADAPTER PLATE 2- GASKETS	☐	☐	☐	☐	☐	☐	☐	☐	☑	☑	☑	☑	☑	☑	☑	☑	11
	31361	PLATE, DUCT COVER, 4 INCH	☑	☑	☑	☑	☑	☑	☑	☑	☑	☑	☑	☑	☑	☑	☑	☑	8
Electrode																			
	37057	ELECTRODE, CHF1 ASSY	☐	☐	☐	☐	☐	☐	☐	☐	☑	☑	☑	☑	☐	☐	☑	☐	12
	36997	ELECTRODE, CHF3 ASSY	☐	☐	☐	☐	☐	☐	☐	☐	☑	☑	☑	☑	☐	☐	☐	☐	NS
Elements																			
	34976	WELDMENT,ELEMENT 89-II	☑	☑	☑	☑	☑	☑	☑	☑	☑	☑	☑	☑	☐	☐	☑	☐	13
	34451	WELDMENT,ELEMENT, 89 LD2	☐	☐	☐	☐	☐	☐	☐	☐	☐	☐	☐	☐	☑	☑	☐	☑	13
Gasket																			
	32841	GASKET MOTOR 85	☑	☑	☑	☑	☑	☑	☑	☑	☐	☐	☐	☐	☐	☐	☐	☐	
	32172	GASKET,ELECTRODE	☑	☑	☑	☑	☑	☑	☑	☑	☐	☐	☐	☐	☐	☐	☐	☐	NS
	37956	GASKET,EXHAUST WALL	☑	☑	☑	☑	☑	☑	☑	☑	☑	☑	☑	☑	☑	☑	☑	☑	18
	37713	GASKET,MOTOR,89 DC,AC	☑	☑	☑	☑	☑	☑	☑	☑	☑	☑	☑	☑	☑	☑	☑	☑	17
General Parts																			
	34014	COVER,89,BLOWER BACK	☐	☐	☐	☐	☐	☐	☐	☐	☑	☑	☑	☑	☑	☑	☑	☑	24
	37442	PLATE,SLIDE,89-III,S/O	☐	☐	☐	☐	☐	☐	☐	☐	☑	☑	☑	☑	☐	☐	☑	☐	23
	37410	PLUG,85/89,S/O GAS INLET	☐	☐	☐	☐	☐	☐	☐	☐	☑	☑	☑	☑	☐	☐	☑	☐	22
Igniton, Controls																			
	34543	BRACKET, DSI AUXILIARY,PLASTIC	☐	☐	☐	☐	☐	☐	☐	☐	☐	☐	☐	☐	☐	☐	☑	☑	29
	34541	BRACKET, DSI DC MOUNT, PLASTIC	☑	☑	☐	☐	☐	☑	☐	☑	☑	☑	☐	☐	☑	☑	☑	☑	28
	34696	KIT,DSI BOARD 2-STAGE REPLACE	☐	☐	☐	☐	☐	☐	☐	☐	☐	☐	☐	☐	☐	☐	☑	☑	26
	32355	KIT,DSI BOARD 89AC REPLACEMENT	☐	☐	☐	☐	☑	☐	☑	☐	☐	☐	☑	☑	☐	☐	☐	☐	
	37515	KIT,DSI BOARD 89AC REPLACEMENT	☐	☐	☑	☑	☑	☐	☑	☐	☐	☐	☑	☑	☐	☐	☐	☐	30
	31501	KIT,UNIVERSAL IGNITION DC	☑	☑	☐	☐	☐	☑	☐	☑	☑	☑	☐	☐	☑	☑	☐	☐	26
Manifold																			
	37392	MANIFOLD, W/R 85/89-III	☐	☐	☐	☐	☐	☐	☐	☐	☑	☑	☑	☑	☐	☐	☑	☐	20

8900 Service Parts

NS = PART NOT SHOWN

Category	P/N	Descriptions	8935_DC	8940_DC	8935_AC	8940_AC	8935_AC_II	8935_DC_II	8940_AC_II	8940_DC_II	8935_DC_III	8940_DC_III	8935_AC_III	8940_AC_III	8935_DC_LD	8940_DC_LD	2540_DC	2540_DC_LD	Ballon
Motors																			
	34039	CPCTR,4UF 370VAC 10%	☐	☐	☑	☑	☑	☐	☑	☐	☐	☐	☑	☑	☐	☐	☐	☐	34
	37360	KIT,SERVICE MOTOR BRKT 85/89	☐	☐	☐	☐	☐	☐	☐	☐	☑	☑	☐	☐	☐	☐	☐	☐	35
	37357	KIT,SERVICE MOTOR W/LEADS85/89	☑	☑	☐	☐	☐	☑	☐	☑	☑	☑	☐	☐	☑	☑	☐	☐	NS
	37964	MOTOR, 2 STAGE 23/34, 25/40	☐	☐	☐	☐	☐	☐	☐	☐	☐	☐	☐	☐	☐	☐	☑	☑	33
	37698	MOTOR, 8535	☐	☐	☐	☐	☐	☐	☐	☐	☑	☑	☐	☐	☑	☑	☐	☐	33
	35122	MOTOR, AC 89	☐	☐	☑	☑	☑	☐	☑	☐	☐	☐	☑	☑	☐	☐	☐	☐	33
Orifices																			
	31080	KIT, ORIFICE #51 LP	☐	☐	☐	☐	☐	☑	☐	☐	☑	☐	☑	☐	☑	☐	☐	☐	
	36896	KIT,CONVERSION 35K 89-III	☐	☐	☑	☐	☑	☐	☐	☐	☐	☐	☑	☐	☐	☐	☐	☐	37
	36849	KIT,CONVERSION,40K,89-III	☐	☐	☐	☑	☐	☐	☑	☐	☐	☐	☐	☑	☐	☐	☐	☐	37
Power Supplies																			
	35121	ASSY,TRANSFORMER 89AC FURNACE	☐	☐	☑	☑	☑	☐	☑	☐	☐	☐	☑	☑	☐	☐	☐	☐	47
Switches																			
	31092	KIT, SWITCH ON/OFF	☐	☐	☐	☐	☐	☐	☐	☐	☐	☐	☑	☑	☐	☐	☐	☐	
Switches, Limit																			
	37021	SWITCH,LIMIT 36TXV11,L170 TOD	☐	☐	☐	☐	☑	☑	☑	☑	☑	☑	☑	☑	☑	☑	☑	☑	41
	35132	SWITCH,LIMIT INT01L-1441	☑	☑	☑	☑	☐	☐	☐	☐	☐	☐	☐	☐	☐	☐	☐	☐	41
Switches, Sail																			
	36680	SWITCH,SAIL, D41JRGAA	☑	☑	☑	☑	☑	☑	☑	☑	☑	☑	☑	☑	☑	☑	☑	☑	42
Thermostats																			
	38535	THERMOSTAT,2 STAGE-DM/RVP WHT	☐	☐	☐	☐	☐	☐	☐	☐	☐	☐	☐	☐	☐	☐	☑	☑	43
	38555	THERMOSTAT,DIGITAL 12VDC 1H/2C	☑	☑	☑	☑	☑	☑	☑	☑	☑	☑	☑	☑	☑	☑	☐	☐	43
	38452	THERMOSTAT,HEAT ONLY,BROWN	☑	☑	☑	☑	☑	☑	☑	☑	☑	☑	☑	☑	☑	☑	☐	☐	44
	38453	THERMOSTAT,HEAT ONLY,WHITE	☑	☑	☑	☑	☑	☑	☑	☑	☑	☑	☑	☑	☑	☑	☐	☐	44
Valves																			
	31909	KIT, VALVE AC 8940	☐	☐	☐	☐	☐	☐	☐	☐	☐	☐	☐	☑	☐	☐	☐	☐	
	31150	KIT, VALVE SIDE OUTLET, 12VDC	☐	☐	☐	☐	☐	☐	☐	☐	☑	☑	☐	☐	☐	☐	☑	☐	NS
	31159	KIT, VALVE STRAIGHT, 24VAC	☐	☐	☑	☑	☑	☐	☑	☐	☐	☐	☑	☑	☐	☐	☐	☐	
	31151	KIT,VALVE SIDE OUT 24 VAC	☐	☐	☐	☐	☐	☐	☐	☐	☐	☐	☑	☑	☐	☐	☐	☐	32
	38605	VALVE,2 STAGE, 12VDC COILS	☐	☐	☐	☐	☐	☐	☐	☐	☐	☐	☐	☐	☐	☐	☑	☑	49
	38604	VALVE,SIDE OUTLET, 12VDC COIL	☐	☐	☐	☐	☐	☐	☐	☐	☑	☑	☐	☐	☑	☑	☐	☐	46
	38603	VALVE,SIDE OUTLET, 24VAC COIL	☐	☐	☐	☐	☐	☐	☐	☐	☐	☐	☑	☑	☐	☐	☐	☐	46
	38607	VALVE,STRAIGHT, 12VDC COIL	☑	☑	☐	☐	☐	☑	☐	☑	☑	☑	☐	☐	☐	☐	☐	☐	NS
	38606	VALVE,STRAIGHT, 24VAC COIL	☐	☐	☑	☑	☑	☐	☑	☐	☐	☐	☑	☑	☐	☐	☐	☐	NS
Vent, Exhaust																			
	34422	ASSY,VENT 3/8 LD2	☐	☐	☐	☐	☐	☐	☐	☐	☐	☐	☐	☐	☐	☑	☐	☑	53
	34423	ASSY,VENT 5/8 LD2	☐	☐	☐	☐	☐	☐	☐	☐	☐	☐	☐	☐	☑	☐	☐	☐	53
	34410	INTAKE AIR ADAPTER LD2	☐	☐	☐	☐	☐	☐	☐	☐	☐	☐	☐	☐	☑	☑	☐	☑	51
	38139	KIT,DRAFT SHIELD 16 & 20	☐	☐	☐	☐	☐	☐	☐	☐	☑	☐	☑	☐	☑	☐	☐	☐	
	38141	KIT,DRAFT SHIELD 25, 31 & 35	☐	☐	☐	☐	☐	☐	☐	☐	☐	☑	☐	☑	☐	☐	☑	☐	NS
Wheels																			

8900 Service Parts

Category	P/N	Descriptions (NS = PART NOT SHOWN)	8935_DC	8940_DC	8935_AC	8940_AC	8935_AC_II	8935_DC_II	8940_AC_II	8940_DC_II	8935_DC_III	8940_DC_III	8935_AC_III	8940_AC_III	8935_DC_LD	8940_DC_LD	2540_DC	2540_DC_LD	Ballon
	33128	KIT, COMBUSTION WHEEL	☑	☑	☑	☑	☑	☑	☑	☑	☑	☑	☑	☑	☑	☑	☑	☑	55
	34099	KIT,BLOWER WHEEL 89 PLASTIC	☑	☑	☑	☑	☑	☑	☑	☑	☑	☑	☑	☑	☑	☑	☑	☑	56
Wiring																			
	30007	KIT, WIRING,SERVICE 85/89 DC	☐	☐	☐	☐	☐	☐	☐	☐	☑	☑	☐	☐	☐	☐	☐	☐	57

WARRANTY

Dometic
***hydro flame*™ FURNACE LIMITED WARRANTY**

Dometic Corporation warrants to the original owner and subject to the below mentioned conditions, that this hydro flame™ product will be free of defects in material or workmanship for a period of two years from the original date of purchase.
Dometic's liability hereunder is limited to the replacement of the product, repair of the product, or replacement of the product with a reconditioned product at the discretion of the manufacturer. This warranty is void if the product has been damaged by accident, unreasonable use, neglect, tampering or other cause not arising from defects in material workmanship.
This warranty extends to the original owner of the product only and is subject to the following conditions:

1. For two years from the date of purchase, Dometic will repair or replace any part defective in material or workmanship. This warranty includes reasonable labor charges required to remove and replace the part. Service calls to customer's location are not considered part of these charges and are, therefore, the responsibility of the owner.
2. This warranty does not cover the following items classified as normal maintenance:

- **ADJUSTING** – gas pressure, voltage, loose wire connections, and/or thermostat heat anticipator.
- **CLEANING** – air wheels, burner and/or burner orifice
- **CLEANING OR ADJUSTING** – heat chamber, heat ducting, return air opening, and/or exhaust tubes.

3. **In the event of a warranty claim, the owner must contact, in advance, either an authorized Dometic Service Center or the Dometic Service Department. Warranty clam service must be performed at an authorized Dometic Service Center (a list will be provided at no charge) or an approved by the Consumer Service Department, 1120 North Main, Elkhart, IN 46514 USA. Phone:** 1-866-869-3118**.**
4. RETURN PARTS MUST BE SHIPPED TO DOMETIC "PREPAID". Credit for shipping costs will be included with the warranty clam. The defective parts become the property of Dometic Corporation and must be returned to the **Dometic, 1120 North Main Street, Elkhart, IN 46514.**
5. This warranty applies only if the unit is installed according to the installation instructions provided and complies with local and state codes.
6. The warranty period on replacement parts is the unused portion of the original warranty period.
7. Damage or failure resulting from misuse (including failure to seek proper repair service). Misapplication, alternations, water damage, freezing or not using genuine Dometic parts are the owner's responsibility.
8. Dometic does not assume responsibility for any loss of use of vehicle, loss of time, inconvenience, expense for gasoline, telephone, travel, lodging, loss or damage to personal property or revenues. Some states do not allow the exclusion or limitation of incidental or consequential damages, so the above limitations or exclusions may not apply to you.
9. Any implied warranties are limited to (2) two years. Some states do not allow limitations on how long an implied warranty lasts, so the above limitation may not apply to you. This warranty gives you specific legal rights and you may also have other rights which vary from state to state.
10. Replacement parts purchased outside of the original furnace warranty carry a 90 day warranty. This includes the part at no charge and reasonable labor charges to replace it.

This hydro flame furnace is designed for use in recreation vehicles for the purpose of heating air as stated in the "data plate" attached to furnace. Any other use, unless authorized in writing by the Dometic Engineering Department, voids this warranty.

FURNACE EXTENDED SERVICE CONTRACT

TERM AND PROVISIONS:

1. Written approval by Dometic must be obtained prior to having any repairs made or parts replace under these Warranties at other than an Dometic Authorized Service Center. A list can be obtained by call 1-866-869-3118 or going on line at: Website http://www.atwoodmobile.com
2. Air freight or postage charges shall be borne by party claiming under Warranties. The Original Purchase shall have the full responsibility of making the furnace or RV available for repair or replacement at Dometic Corporation. Service calls are not covered under the normal two year warranty.
3. Atwood's Authorized Service Centers are neither agents nor employees of Dometic and at all times will be acting as independent contractors with the Original Purchaser. Dometic will reimburse service centers for warranty service rendered on a direct basis only.
4. Repairs replacement parts and or furnace replacement authorized by Dometic shall be subject to the reminder of the warranty, if any of the aforesaid two year period.

EXCLUSIONS (SPECIFICALLY EXCLUDED FROM THE WARRANTIES)

1. Incidental or consequential damages.
2. Damaged caused by shipment.
3. Damage resulting from improper installation, misuse, neglect, accident or use in violation of instructions furnished by Dometic.
4. Equipment and parts which have been altered in any way whatsoever without written authorization from Dometic.
5. All repairs and replacement parts not authorized by Dometic.
6. Preventative maintenance.

LIMITATIONS

1. The maximum liability of Dometic in connection with this limited warranty shall not in any event exceed the original price paid for the furnace claimed to be defective or unsuitable.
2. Components manufactured by any supplier other than Dometic shall bear only that warranty made by the manufacture or supplier of that product.

Dometic Extended Service Contract Provides These Extras!

DOMETIC WATER HE ATER inner tank

- Extends coverage to full five years.

***HYDRO FLAME* FURNACE combustion chamber**

- One price covers parts and labor

DOMETIC/WEDGEWOOD RANGE gas valves & manifold

- In shop service (read complete information on form below)

Also available... Service Related Travel

- Includes mileage travel expense by authorized service center
- Up to 200 miles total of service travel
- One full year of coverage

DOMETIC EXTENDED SERVICE CONTRACTS

☐ $125.00 **Water Heater Tank**—An extended service contract is available covering the parts and labor for replacement of the inner tank in the event the water heater tank develops leaks due to corrosion. This extends the original (2) two year warranty an additional (3) three years for a total of (5) years to the original owner from the original date of purchase of the water heater or vehicle.

Model: _____

Serial Number: _____

☐ $75.00 **Furnace Combustion Chamber**—An extended service contract is available covering the parts and labor for replacement of the combustion chamber in the furnace in the event the combustion chamber were to prematurely fail due to defects in material or workmanship. This extends the original (2) two year warranty an additional (3) three years for a total of (5) years to the original owner from the original date of purchase of the furnace or vehicle.

Model: _____

Serial Number: _____

☐ $75.00 **Range Gas Valves and Manifold**—An extended service contract is available covering the parts and labor for replacement of the range burner valves and manifold in the event of premature failure due to defects in material and workmanship. This extends the original (2) two year warranty an additional (3) three years for a total of (5) years to the original owner from the original date of purchase of the water heater or vehicle.

Model: _____

Serial Number: _____

☐ $(10.00) Save $10 by selecting all three service contracts.

☐ $60.00 **Mileage Travel Expense**—Mileage travel expense is not covered by the Limited Warranty issued with each product. If it is anticipated that it may be inconvenient to transport your vehicle or Dometic product to obtain service you may choose to purchase this Service Mileage option. This will pay up to 200 miles of service travel at 20 cents per mile to an authorized Dometic Service Center whose service personnel travels to your location to perform in-warranty service work on our Dometic product. This is for (1) one year from the original date of purchase of the vehicle or Dometic water heater, furnace or range.

☐ Water Heater	$125.00
☐ Furnace	$75.00
☐ Range	$75.00
☐ Less $10 for all 3	($10.00)
☐ Mileage/Travel	$60.00
Total Due:	$_____

To qualify for any of these options, they must be purchased within 90 days of the vehicle or product purchase. Prices listed are in US DOLLARS-please make check amount accordingly. Upon receipt of this completed card together with your check or money order, Atwood will send you a written confirmation of the options you selected

EXTENDED SERVICE ORDER FORM

Today's Date: _____

Date of Purchase: _____

Name: _____

Phone: _____

Address: _____

City: _____ ST: ___ Zip: _____

Dealer's Name: _____

RV Manufacturer: _____

DOMETIC CORPORATION
1120 N Main
Elkhart, IN 46514

NOTES: