Dometic®

MICROWAVE OVEN
SERVICE MANUAL
MODEL: DOTR12CB/W

CAUTION
BEFORE SERVICING THE UNIT, READ THE
SEFETY PRECAUTIONS IN THIS MANUAL.

CAUTION

SAFETY PRECAUTIONS

PRECAUTIONS TO BE OBSERVED BEFORE AND DURING SERVICING TO AVOID POSSIBLE EXPOSURE TO EXCESSIVE MICROWAVE ENERGY

a. Do not operate or allow the oven to be operated with the door open.

b. Make the following safety checks on all ovens to be serviced before activating the magnetron or other microwave source, and make repairs as necessary; (1) Interlock operation, (2) proper door closing, (3) seal and sealing surfaces (arcing, wear, and other damage), (4) damage to or loosening of hinges and latches, (5) evidence of dropping or abuse.

c. Before turning on microwave power for any service test or inspection within the microwave generating compartments, check the magnetron, wave guide or transmission line, and cavity for proper alignment, integrity, and connections.

d. Any defective or misadjusted components in the interlock, monitor, door seal, and microwave generation and transmission systems shall be repaired, replaced, or adjusted by procedures described in this manual before the oven is released to the owner.

e. A Microwave leakage check to verify compliance with the Federal Performance Standard should be performed on each oven prior to release to the owner.

- Proper operation of the microwave ovens requires that the magnetron be assembled to the wave guide and cavity. Never operate the magnetron unless it is properly installed.

- Be sure that the magnetron gasket is properly installed around the dome of the tube whenever installing the magnetron.

- Routine service safety procedures should be exercised at all times.

- Untrained personnel should not attempt service without a thorough review of the test procedures and safety information contained in this manual.

FOREWORD

Read this Manual carefully. Failure to adhere to or observe the information in this Manual may result in exposing yourself to the Microwave Energy normally contained within the oven cavity.

TABLE OF CONTENTS

(Page)

SAFETY PRECAUTIONS ..... inside front page

SPECIFICATIONS 1-1

CAUTIONS 2-1

INSTALLATIONS 3-1

OPERATING INSTRUCTIONS 4-1

- CONTROL PANEL 4-1
- CONTROL PANEL INSTRUCTIONS 4-2

OVERALL CIRCUIT DIAGRAM 5-1

- SCHEMATIC DIAGRAM 5-1
- MATRIX CIRCUIT FOR TOUCH KEY BOARD 5-2

GENERAL INFORMATION FOR SERVICE 6-1

- GENERAL PRECAUTIONS IN USE 6-1
- TRIAL OPERATION 6-1
- FEATURES AND SPECIFICATIONS FEATURES 6-1

SERVICE INFORMATION 7-1

- PRECAUTIONS AND REPAIR SERVICE TIPS 7-1
- MICROWAVE LEAKAGE TEST 7-2
- POWER OUTPUT MEASUREMENT 7-3
- DISASSEMBLY INSTRUCTIONS 7-4
- INTERLOCK SYSTEM 7-11
- INTERLOCK CONTINUITY TEST 7-13
- TEST AND CHECKOUT PROCEDURES AND TROUBLE SHOOTING 7-14
- A. TEST PROCEDURES 7-14
- B. CHECKOUT PROCEDURES 7-17
- C. TROUBLE SHOOTING 7-20

EXPLODED VIEW 8-1

- REPLACEMENT PARTS LIST 8-8
- SCHEMATIC DIAGRAM OF PCB 8-11
- PRINTED CIRCUIT BOARD 8-12
- PCB PARTS LIST 8-13

SPECIFICATIONS

Rated Power Consumption	1,350W maximum (Microwave oven+Cook top lamps+Ventilation fan)
Microwave Output	950W (IEC 705 TEST PROCEDURE)
Frequency	2,450 MHz ± 50 MHz
Power Supply	120 VAC, 60 Hz
Rated Current	12.5 Amp. (Microwave oven+Cook top lamps+Ventilation fan)
Magnetron Cooling	Forced Air Cooling
Rectification	Rectification Voltage Doubler Half-Wave
Door Sealing	Choke System
Safety Devices	Magnetron Thermal Fuse: Open at 150°C ± 4°C Oven Cavity Thermostat: Open at 90°C ± (75 or 0)°C Fuse(20A) Primary Interlock Switch Secondary Interlock Switch Interlock Monitor
Magnetron	2M214-5129F
High Voltage Capacitor	Capacitor: 0.95μF, 2.1 KV AC
High Voltage Diode	Diode; 350mA, 9.0 KV
Cook top Lamp	125 V, 30 W
Cavity Lamp	125 V, 30 W
Timer	Digital, up to 99 mm. 99 sec. (in each cooking stage)
Tray	Tempered Safety Glass
Overall Dimensions	21 7/8”(W)x16 5/8”(D)x16 1/8”(H)
Oven Cavity Size	14”3/4(W)x16”(D)x9 1/4”(H)
Effective Capacity of Oven Cavity	1.3 Cu.ft.
Accessories	Owner’s Manual & Cooking Guide, Installation Manual, Exhaust Adapter, Exhaust Damper, Mounting Kit and Two Filters, Rotating Ring Assembly.

CAUTIONS

Unlike other appliances, the microwave oven is high-voltage and high-current equipment. Though it is free from danger in ordinary use, extreme care should be taken during repair.

- DO NOT operate on a 2-wire extension cord during repair and use.
- NEVER TOUCH any oven components or wiring during operation.
- BEFORE TOUCHING any parts of the oven, always remove the power plug from the outlet.
- For about 30 seconds after the oven stops, an electric charge remains in the high voltage capacitor. When replacing or checking, you must discharge the high voltage capacitor by shorting across the two terminals with an insulated screwdriver.

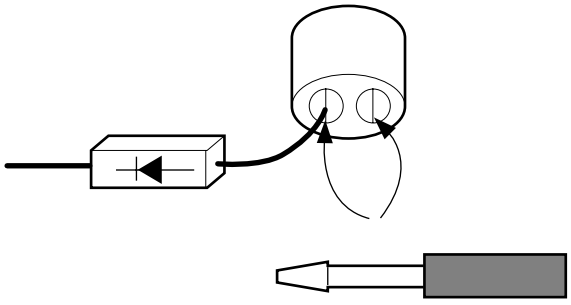

- Remove your watches whenever working close to or replacing the Magnetron.
- DO NOT touch any parts of the control panel circuit. A resulting static electric discharge may damage this P.C.B.
- NEVER operate the oven with no load.
- NEVER injure the door seal and front plate of the oven cavity.
- NEVER put iron tools on the magnetron.
- NEVER put anything into the latch hole and the interlock switches area.

MICROWAVE RADIATION

Personnel should not be exposed to the microwave energy which may radiate from the magnetron or other microwave generating device if it is improperly used or connection.
All input and output microwave connections, waveguide, flange, and gasket must be secure never operate the device without a microwave energy absorbing load attached.
Never look into an open waveguide or antenna while the device is energized.

- Proper operation of the microwave oven requires that the magnetron be assembled to the waveguide and cavity. Never operate the magnetron unless it is properly installed.
- **Be sure that the magnetron gasket is properly installed around the dome of the tube whenever installing the magnetron.**

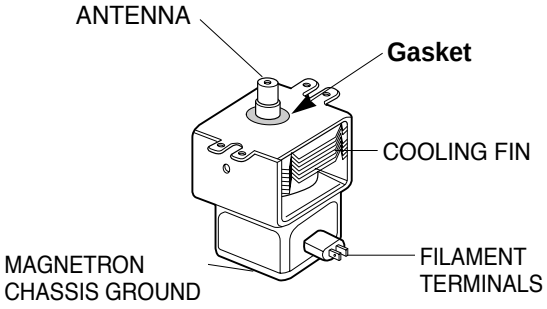

MAGNETRON

THE OVEN IS TO BE SERVICED ONLY BY PROPERLY QUALIFIED SERVICE PERSONNEL.

INSTALLATIONS

BEFORE YOU BEGIN, READ THE FOLLOWING INSTRUCTIONS COMPLETELY AND CAREFULLY.

PRECAUTIONS ON INSTALLATION

A. Plug the power supply cord into a 120V AC, 60Hz, single-phase power source with a capacity of 20A.
B. Avoid placing the unit in a location where there is direct heat or splashing water.
C. Install the unit on the mounting plate firmly.
D. Place the unit as far away as possible from TV, radio, etc. to prevent interference.

GROUNDING INSTRUCTIONS

For personal safety, this appliance must be fully grounded at all times.

In the event of an electrical short circuit, grounding reduces the risk of electrical shock.
The plug must be plugged into an outlet that is properly installed and grounded.

CAUTION

This unit is equipped with a 3-prong plug for your safety. If the wall outlet is a grounded 3-hole type, the unit will be grounded automatically.

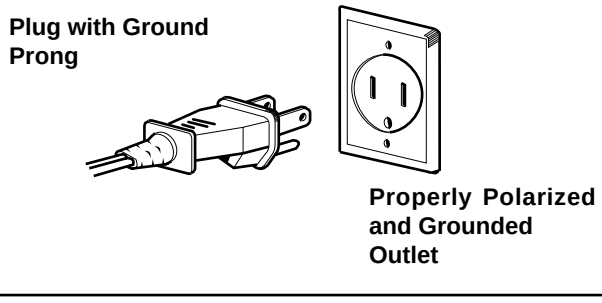

WARNING

Improper use of the grounding plug can result in a risk of electric shock.
Do not, under any circumstances, cut or remove the third ground prong from the power cord plug.

OPERATING INSTRUCTIONS

CONTROL PANEL

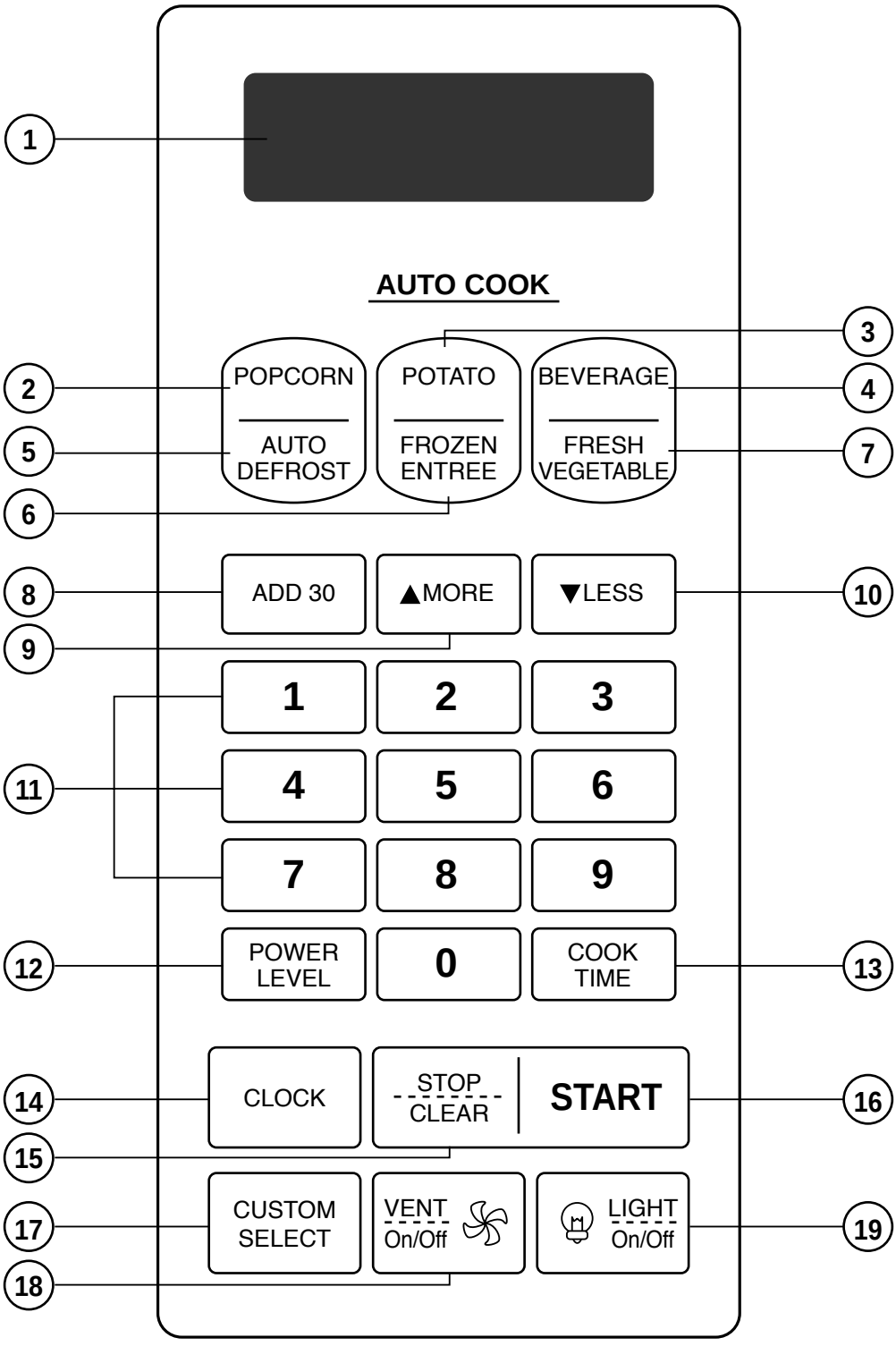

CONTROL PANEL INSTRUCTIONS

1. **DISPLAY:** The display includes a clock and indicators to tell you time of day, cooking time settings, and cooking functions selected.

2. **POPCORN:** Touch this pad when popping popcorn in your microwave oven.

3. **POTATO:** Touch this pad to cook from 1 to 4 potatoes.

4. **BEVERAGE:** Touch this pad to reheat one or two cups of a beverage.

5. **AUTO DEFROST:** Meat, poultry, fish. Touch on pad to select food type and defrost food by weight.

6. **FROZEN ENTREE:** Touch this pad to reheat 10 oz.

7. **FRESH VEGETABLE:** Touch this pad to cook from 1 to 4 cups.

8. **ADD 30:** Touch this pad to start microwave oven without touching START. You can set 30 seconds up to 3 minutes; after 3 minutes, every touch will add 1 minute up to 99 min. 59 sec.

9. **MORE:** Touch this pad to add ten seconds of cooking time each time you press it.

10. **LESS:** Touch this pad to subtract ten seconds of cooking time each time you press it.

11. **NUMBER:** Touch number pads to enter cooking time, power level, quantities, or weights.

12. **POWER LEVEL:** Touch this pad to select a cooking power level.

13. **COOK TIME:** Used to set manual time cooking.

14. **CLOCK:** Touch this pad to enter the time of day.

15. **STOP/CLEAR:** Touch this pad to stop the oven or to clear all entries.

16. **START:** Touch this pad to start a function. If you open the door after oven begins to cook, touch START again.

17. **CUSTOM SELECT:** Touch this pad to change the oven's default settings for sound, clock, display scroll speed, defrost weight.

18. **VENT ON/OFF:** Touch this pad to turn the fan on or off.

19. **LIGHT ON/OFF:** Touch this pad to turn on the cooktop/countertop light.

OVERALL CIRCUIT DIAGRAM

SCHEMATIC DIAGRAM

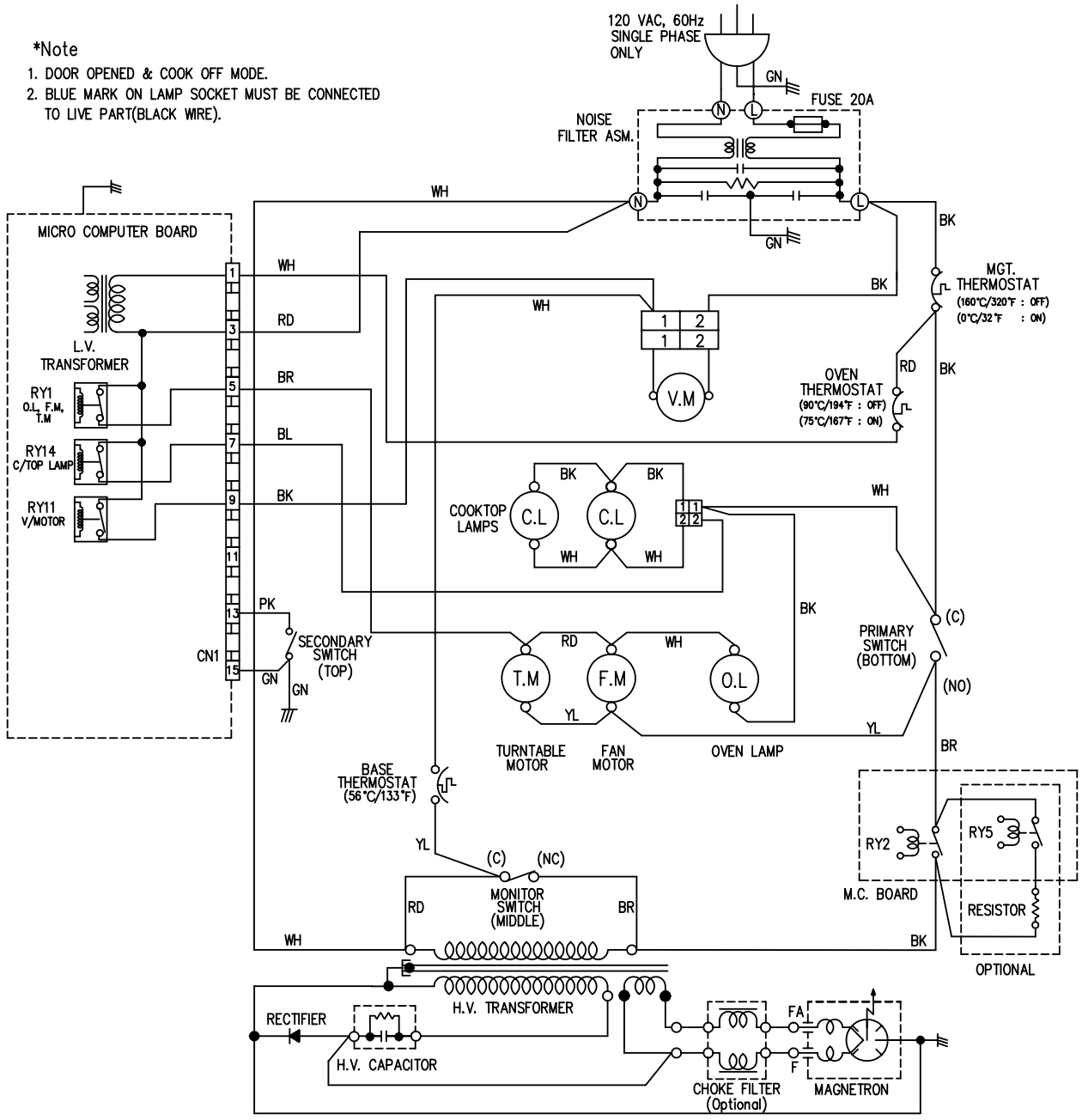

CONTROL MODULE

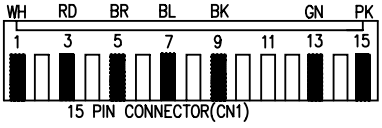

WIRE COLORS

SYMBOL	COLOR
WH	WHITE
BK	BLACK
RD	RED
YL	YELLOW
PK	PINK
BL	BLUE
BR	BROWN
GN	GREEN
GY	GREY

MATRIX CIRCUIT FOR TOUCH KEY BOARD

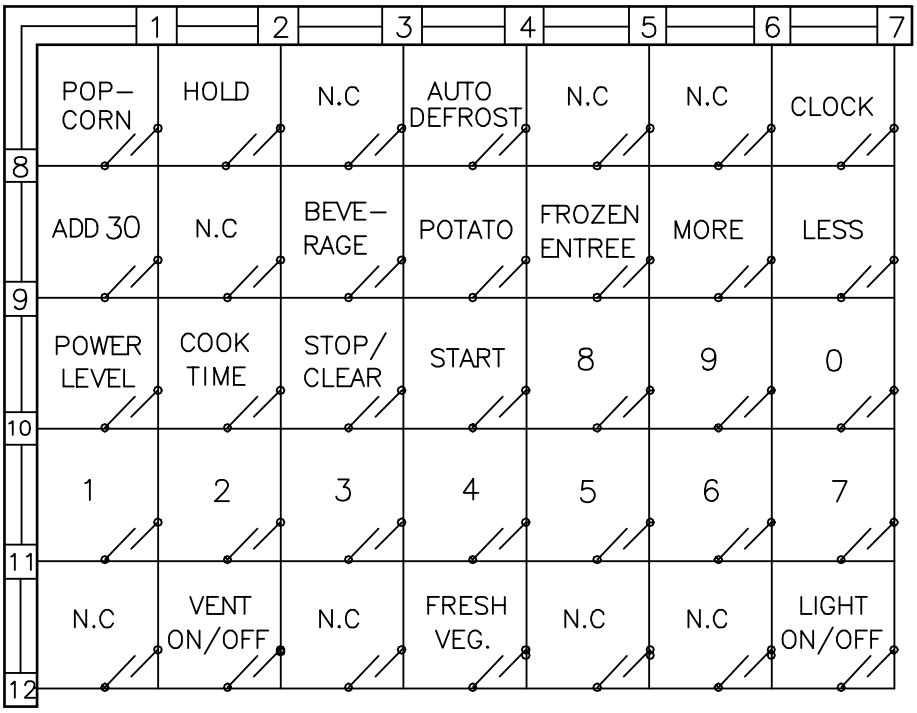

GENERAL INFORMATION FOR SERVICE

GENERAL PRECAUTIONS IN USE

A. Never operate the unit when it is empty. Operating the oven with no load may shorten the life of the magnetron. Whenever cooking dry foods (dried fish, bread, etc.) or a small amount of food, be sure to put a glass of water into the cooking compartment. The glass turntable may become hot after operating, be careful when touching it.
B. Aluminum foil should be avoided because it will disrupt cooking and may cause arcing. However, small pieces may be used to cover some parts of food to slow the cooking. Any aluminum foil used should never be closer than 2.5 cm to any side wall of the oven.

TRIAL OPERATION

After installation, the following sequences and results should be checked carefully.

A. Put a container filled with water (about 1 liter) into the oven, and close the door tightly.
B. Set cooking time for 10 minutes by touching “1” and then “0” three times. “1, 0, 0, 0” appears in the display window.
C. Touch the START key.
Make sure the cavity light comes on. The unit will begin cooking and the display window will show the time counting down by seconds.
D. After about 5 minutes, make sure the primary interlock switch, the secondary interlock switch and the interlock monitor switch operate properly by opening and closing the door several times. Touch the START key each time the door is closed.
E. Continue operating the unit. Two short and a long beep sound signal is heard when the time is up. The unit will shut off automatically.
F. Confirm the water is hot.
G. Finally, measure the output power according to “POWER OUTPUT MEASUREMENT” on page 7-3.

FEATURES AND SPECIFICATIONS FEATURES

A. The safety systems incorporated in this model are:
(1) Primary interlock switch
(2) Secondary interlock switch
(3) Interlock monitor switch
(4) Choke system
(5) Magnetron thermal fuse
(6) Oven cavity thermostat
(**Note**: This thermostat located on the oven cavity will open and stop the unit from operation only if a high temperature is reached, such as, a fire created by overcooking food.)
B. Any one of 10 power output levels ranging 95W to 950W can be selected by the touch control and electronic computer system.
C. The temperature probe enables accurate control of cooking temperature and results (If provided.).
D. Three different cooking stages can be set. The oven remembers three cooking stages and changes from one cooking stage to another. This is made possible with the memory function of the microprocessor. This cooking process can be set after Auto Defrost is set.

SERVICE INFORMATION

PRECAUTIONS AND REPAIR SERVICE TIPS

PRELIMINARY

A. SINCE NEARLY 2,100 VOLTS EXISTS IN SOME CIRCUITS OF THIS UNIT REPAIRS SHOULD BE CARRIED OUT WITH GREAT CARE.
The filament leads of magnetron carry High Voltage with respect to ground. Extreme caution must be exercised. Never plug the unit into a power source to determine which component is defective in high voltage section.

B. TO AVOID POSSIBLE EXPOSURE TO MICROWAVE ENERGY LEAKAGE, THE FOLLOWING PRECAUTIONS MUST BE TAKEN BEFORE SERVICING.

(1) Before the power is applied:
- (a) Make sure the primary interlock switch, the secondary interlock switch and the interlock monitor switch operate properly by opening and closing the door several by opening and closing the door several times.
- (b) Make sure the perforated screen and the dielectric choke of the door are correctly and firmly mounted.

(2) After power is applied:
- (a) Make sure the interlock switch mechanism is operating properly by opening and closing the door.
- (b) Check microwave energy leakage must be below the limit of 5 mW/cm^2.
  (All service adjustments should be made for minimum microwave energy leakage readings).

(3) Do not operate the unit until it is completely repaired, if any of the following conditions exist. The unit must not be operated.
- (a) The door does not close firmly.
- (b) The hinge is broken.
- (c) The door seal is damaged.
- (d) The door is bent or warped, or there is any other visible damage on the unit that may cause microwave energy leakage.

NOTE: Always keep the seal clean.
- (e) Make sure that there are no defective parts in the interlock mechanism.
- (f) Make sure that there are no detective parts in the microwave generating and transmission assembly (especially waveguide).

(4) The following items should be checked after the unit is repaired:
- (a) The interlock monitor switch is connected correctly and firmly.
- (b) The magnetron gasket is properly positioned and mounted.
- (c) The waveguide and the oven cavity are intact. (no microwave energy leakage)
- (d) The door can be properly closed and the safety switches work properly.
- (e) The unit must stop when the door is opened or the time is up.

The unit must not be operated with any of the above components removed or by-passed.

MICROWAVE LEAKAGE TEST

CAUTIONS

- **Be sure to check microwave leakage prior to servicing the oven if the oven is operative prior to servicing.**
- **The service personnel should inform the manufacture importer, or assembler of any certified oven unit found to have a microwave emission level in excess of 5 mW/cm²** and should repair any unit found to have excessive emission levels at no cost to the owner and should ascertain the cause of the excessive leakage. The service personnel should instruct the owner not to use the unit until the oven has been brought into compliance.
- **If the oven operates with the door open, the service personnel should:**
  - **Tell the user not to operate the oven.**
  - **Contact the manufacturer and CDRH (Center for Devices and Radiological Health) immediately.**

NOTE: Address on CDRH
Office of Compliance(HFZ-312)
Center for Devices and Radiological
Healthe 1390, Piccard Drive,
Rockville. MD 20850

- The service personnel should check all surface and vent openings for microwave leakage.
- Check for microwave leakage after every servicing. The power density of the microwave radiation leakage emitted by the microwave oven should not exceed 4 mW/cm². Always start measuring of an unknown field to assure safety for operating personnel from radiation leakage.

EQUIPMENT

- TESTER (VOLTS-DC, AC, Ohmmeter)
- Microwave survey meter
  - Holaday HI-1500
    HI-1501
  - Narda 8100
    8200
- 600 cc non conductive material beaker (glass or plastic), inside diameter: approx. 8.5 cm (3 1/2 in.)
- Glass thermometer: 100°C or 212°F (1 deg scale)

MEASURING MICROWAVE ENERGY LEAKAGE

- **Pour 275±15cc of 20±5°C(68±9°F) water in a beaker which is graduated to 600 cc, and place the beaker on the center of the turntable.**
- **Set the energy leakage monitor to 2,450 MHz and use it following the manufacturer's recommended test procedure to assure correct result.**
- **When measuring the leakage, always use the 2-inch (5cm) spacer supplied with the probe.**
- **Operate the oven at its maximum output.**
- **Measure the microwave radiation using and electromagnetic radiation monitor by holding the probe perpendicular to the surface being measured.**

Move probe along shaded area.

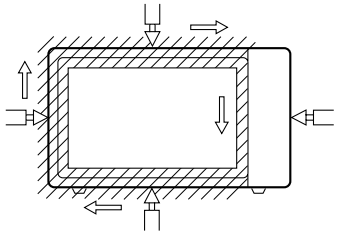

Probe scanning speed
Less than 2.5 cm/sec. (1 in/sec)

MEASUREMENT WITH THE OUTER CASE REMOVED

(1) When you replace the magnetron, measure for microwave energy leakage before the outer case is installed and after all necessary components are replaced or adjusted. Special care should be taken in measuring the following parts.
- Around the magnetron
- The waveguide

WARNING: AVOID CONTACTING ANY HIGH VOLTAGE PARTS.

MEASUREMENT WITH A FULLY ASSEMBLED OVEN

(1) After all components, including the outer panels, are fully assembled, measure for microwave energy leakage around the door viewing window, the exhaust opening and air inlet openings.

(2) Microwave energy leakage must not exceed the values prescribed below.

NOTES:

Leakage with the outer panels removed - less than 5 mW/cm^2.

Leakage for a fully assembled oven ("Before the latch switch (primary) is interrupted") with the door in a slightly opened position - less than 2 mW/cm^2.

NOTE WHEN MEASURING

(1) Do not exceed meter full scale deflection.

(2) The test probe must be removed no faster than 1 inch/sec (2.5cm/sec) along the shaded area, otherwise a false reading may result.

(3) The test probe must be held with the grip portion of the handle. A false reading may result if the operator's hand is between the handle and the probe.

(4) When testing near a corner of the door, keep the probe perpendicular to the surface making sure the probe horizontally along the oven surface, this may possibly cause probe damage.

RECORD KEEPING AND NOTIFICATION AFTER MEASUREMENT

(1) After adjustment and repair of any microwave energy interruption or microwave energy blocking device, record the measured values for future reference. Also enter the information on the service invoice.

(2) Should the microwave energy leakage not be more than 2 mW/cm^2 after determining that all parts are in good condition, functioning properly and genuine replacement parts which are listed in this manual have been used.

(3) At least once a year, have the electromagnetic energy leakage monitor checked for calibration by its manufacturer.

POWER OUTPUT MEASUREMENT

(1) Microwave power output measurement is made with the microwave oven supplied at its rated voltage and operated at its maximum microwave power setting with a load of (1000±5) g of potable water.

(2) The water is contained in a cylindrical borosilicate glass vessel having a maximum material thickness of 1/8" (3 mm) and an outside diameter of approximately 7.6" (190mm).

(3) The oven and the empty vessel are at ambient temperature prior to the start of the test.

(4) The initial temperature (T1) of the water is (10±2)°C (50°F) It is measured immediately before the water is added to the vessel. After addition of the water to the vessel, the load is immediately placed on the center of the turntable which is in the lowest position and the microwave power switched on.

(5) The time T for the temperature of the water to rise by a value Δ T of (10±2)°K is measured, where T is the time in seconds and ΔT is the temperature rise. The initial and final water temperatures are selected so that the maximum difference between the final water temperature and the ambient temperature is 5°K.

(6) The microwave power output P in watts is calculated from the following formula :

$$P = \frac{4187 \times (\Delta T)}{T}$$

is measured while the microwave generator is operating at full power. Magnetron filament heat-up time is not included. (about 3 sec)

(7) The water is stirred to equalize temperature throughout the vessel, prior to measuring the final water temperature.

(8) Stirring devices and measuring instruments are selected in order to minimize addition or removal of heat.

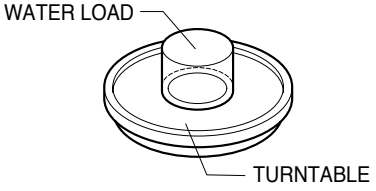

DISASSEMBLY INSTRUCTIONS

IMPORTANT NOTES:

UNIT MUST BE DISCONNECTED FROM ELECTRICAL OUTLET WHEN MAKING REPAIRS, REPLACEMENTS, ADJUSTMENTS AND CONTINUITY CHECKS. WAIT AT LEAST ONE MINUTE, UNTIL THE HIGH VOLTAGE CAPACITOR IN THE HIGH VOLTAGE POWER SUPPLY HAS FULLY DISCHARGED.
THE CAPACITOR SHOULD BE DISCHARGED BY USING INSULATED WIRE - I.E. TEST PROBE CONNECTED TO 10K-OHM RESISTOR IN SERIES TO GROUND.
WHEN RECONNECTING THE WIRE LEADS TO ANY PART, MAKE SURE THE WIRING CONNECTIONS AND LEAD COLORS ARE CORRECTLY MATCHED ACCORDING TO THE OVERALL CIRCUIT DIAGRAM. (ESPECIALLY SWITCHES AND HIGH VOLTAGE CIRCUIT.)

A. REMOVING POWER AND CONTROL CIRCUIT BOARD (Figures 1, 2 and 3)

(1) Remove a screw securing the control panel assembly to the oven cavity.
(2) Remove the control panel with pushing it upward.
(3) Remove the three connectors (CN1) and wire leads (Relay2 and, or Relay5) from the circuit board.

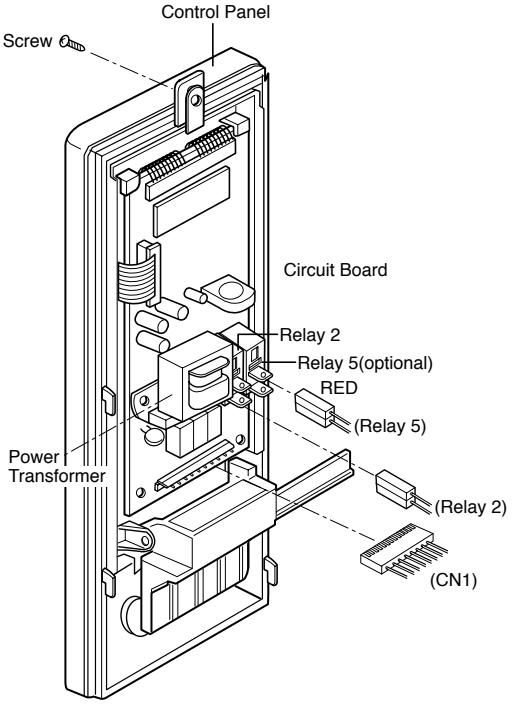

Figure 1

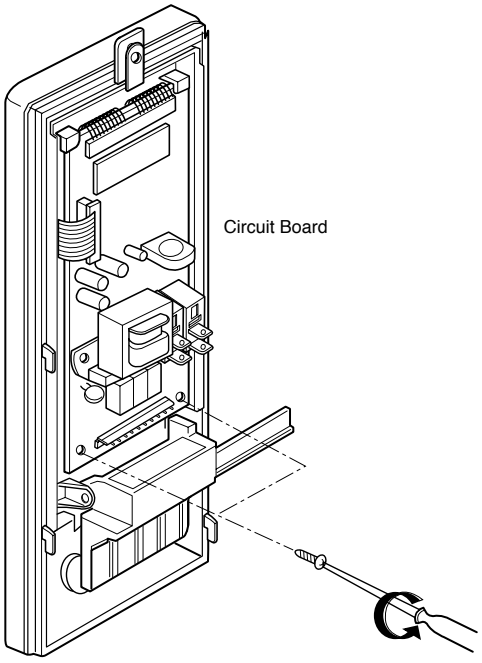

Figure 2

(4) Remove 2 or 3 screws securing the circuit board.

(5) Remove the FPC connector from the terminal socket following “HOW TO REMOVE THE FPC CONNECTOR” on the next page.
(6) Remove the circuit board from the control bracket carefully.

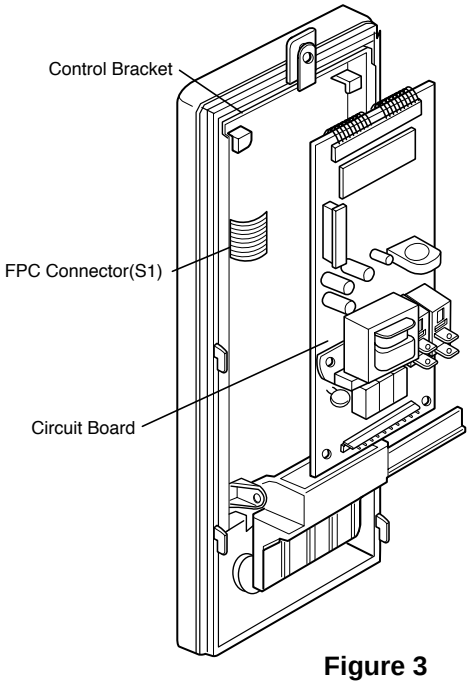

Figure 3

HOW TO REMOVE THE F.P.C. CONNECTOR

Follow the steps below as illustrated in Figures 4 and 5 to remove the F.P.C. connector.

(1) Hold the edges of the plastic fastener with thumb and forefinger.
(Figure 4)
(2) Lift up the lever of the plastic fastener from the terminal socket by lightly pressing the lever end with forefinger.
(Figure 5)
(3) Remove the F.P.C. connector from the terminal socket.

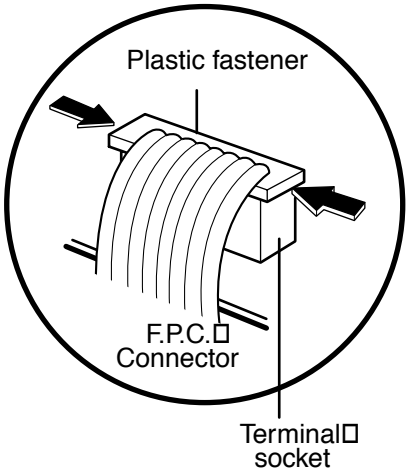

Figure 4

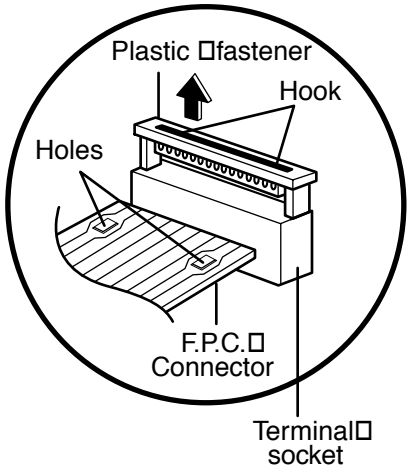

Figure 5

HOW TO INSERT THE F.P.C. CONNECTOR

Follow the steps below as illustrated in Figures 6 and 7 to insert the F.P.C. connector.

(1) Insert the F.P.C. connector into the terminal socket securely with the fingers.
(2) Hold the plastic fastener with thumb and forefinger of the other hand, and push it slowly into the terminal socket. (Figure 6)
NOTE: When reconnecting the F.P.C connector make sure that the holes on the F.P.C. connector are properly engaged with the hooks on the plastic fastener
(3) Lock the level of the plastic fastener into the hook of the terminal socket securely by releasing the fingers.
(Figure 7)

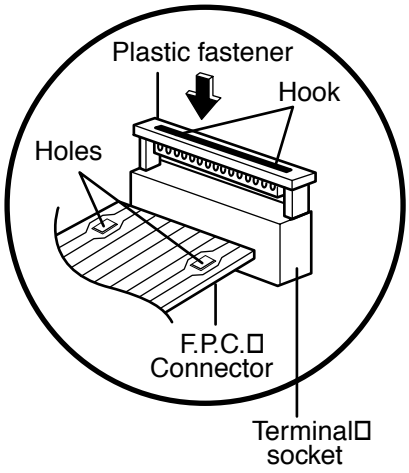

Figure 6

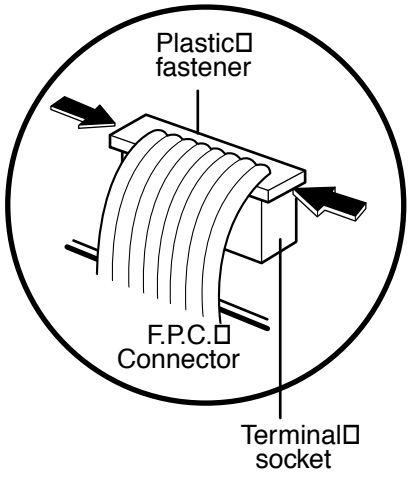

Figure 7

B. REMOVING THE OUT CASE(Figure 8)

(1) Remove the vent grille by removing two screws securing it to the front of out case.
(2) Remove four screws securing it to the air duct. (On the top plate of out case)
(3) Remove the mounting plate by turning the two mounting rods securing itself.
(4) Remove two screws securing them to the out case on the base plate. (Remove the mount-all from the out case by removing two screws securing it to the out case.)
(5) Remove four screws securing them to the back plate.
(6) Slap the both side of out case backward by 1~2 inches.
(7) Disconnect the power cord connector from the noise filter and remove the earth screw.
(8) Remove the out case with pushing it backward completely.

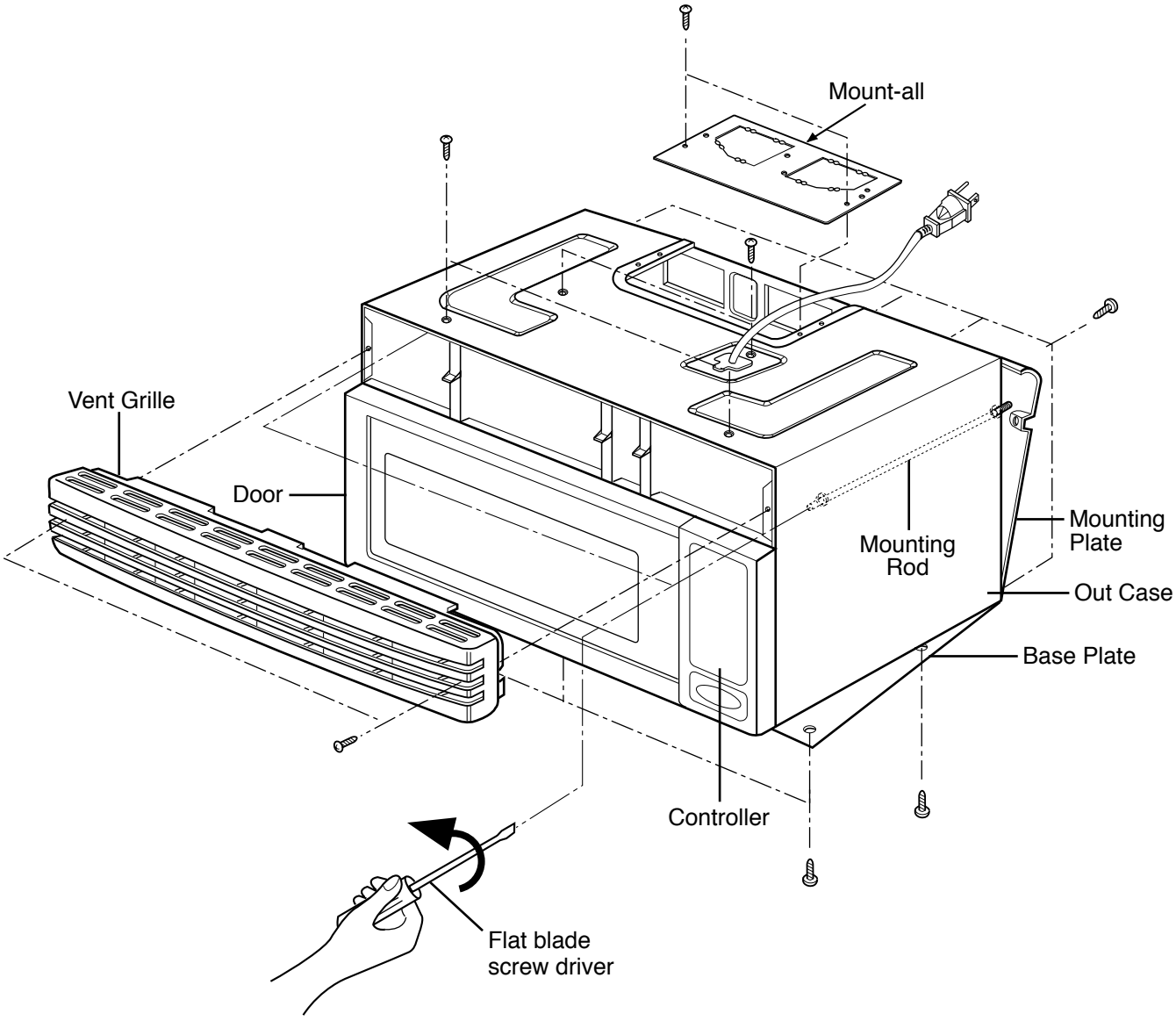

Figure 8

C REMOVING THE DOOR INTERLOCK SWITCHES (Figures 9,10)

(1) Disconnect the wire leads from the interlock switches.
(2) Remove two screws securing the Latch Board.
(3) Make necessary replacements and check microwave energy leakage according to "ADJUSTMENT PROCEDURE" on page 7-11, 12.

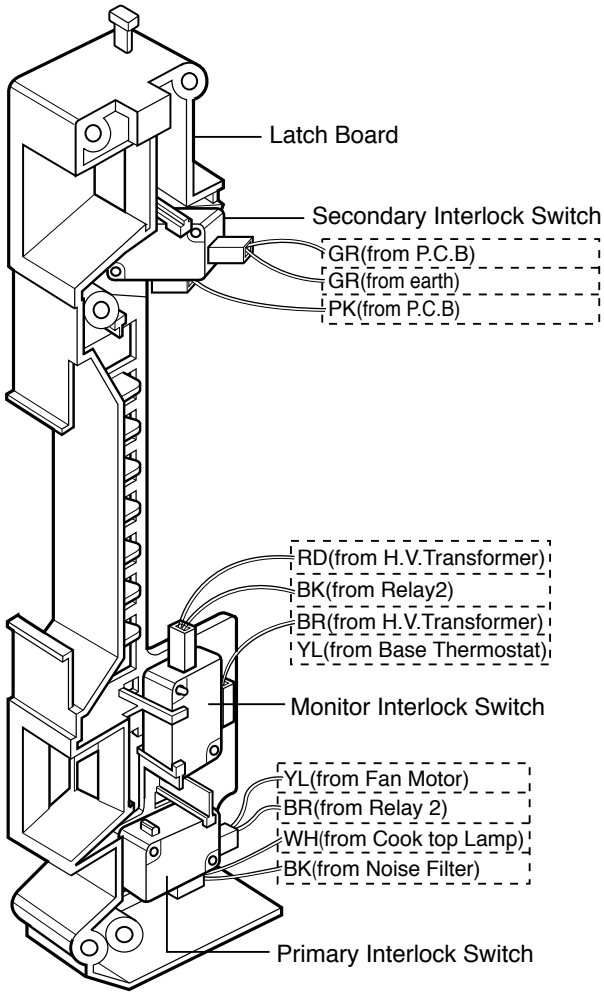

Figure 9

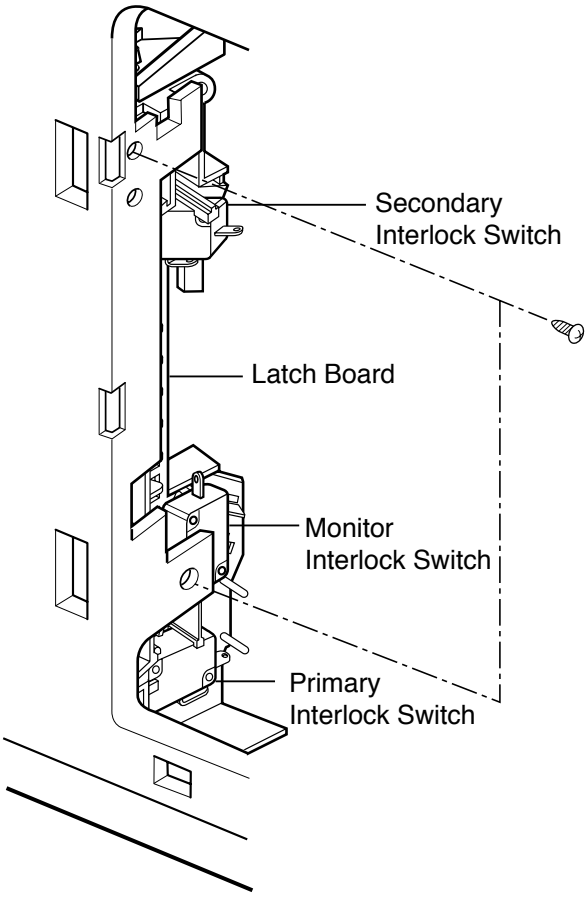

Figure 10

WIRE COLOR

SYMBOL	COLOR
WH	WHITE
BK	BLACK
BR	BROWN
RD	RED
BL	BLUE
PK	PINK
GR	GREEN
N.P.	Not Provided

D. REMOVING MAGNETRON

(Figures 11 Through 12)

(1) Disconnect the power supply cord from the wall outlet.

(2) Remove the vent grille and the out case from unit. (See page 7-6)

(3) Remove the wires from the filament terminals of the magnetron.

(4) Remove two or four tap tite screws securing the magnetron to the wave guide.(Figure 12)

(5) Lift up the magnetron slightly and pull it to the right very carefully.

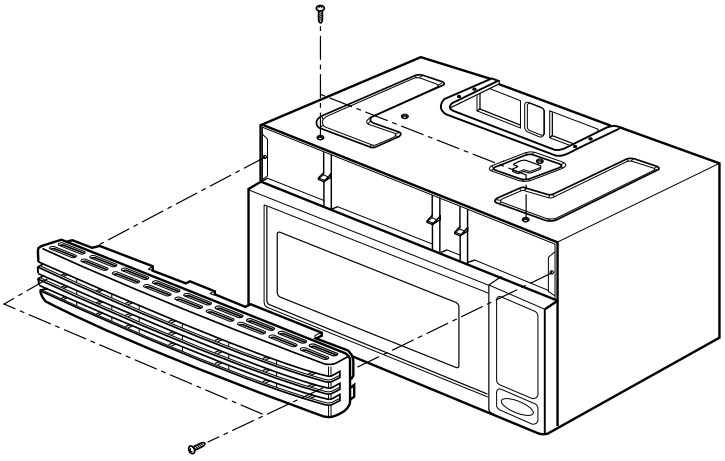

Figure 11

NOTES:

- When removing the magnetron, make sure that its dome does not hit any adjacent parts, or it may be damaged.

- When replacing the magnetron, be sure to install the magnetron gasket in the correct position and be sure that the gasket is in good condition.

- After replacing the magnetron, check for microwave energy leakage with a survey meter Check microwave energy leakage must be below the limit of 5 mW/cm^2. (All service adjustments should be made for minimum microwave energy leakage readings.)

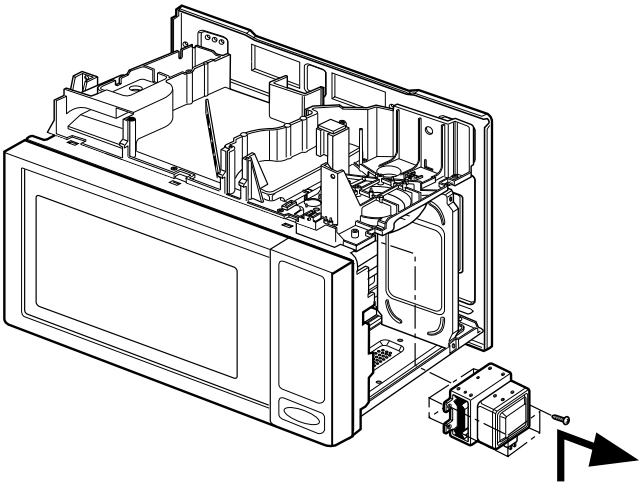

Figure 12

E. REMOVING DOOR (Figure 13)

(1) Remove the vent grille by removing two screws securing it to the front of the out case.
(2) Remove the door cap with small screw driver.
(3) Lift up and push the door.

NOTES:

- After replacing the door, be sure to check that the primary interlock switch, the secondary interlock switch and the interlock monitor switch operate normally.
- After replacing the door, check for microwave energy leakage with a survey meter. Microwave energy leakage must be below the limit of 5mW/cm^2. (With a 275 ml water load)

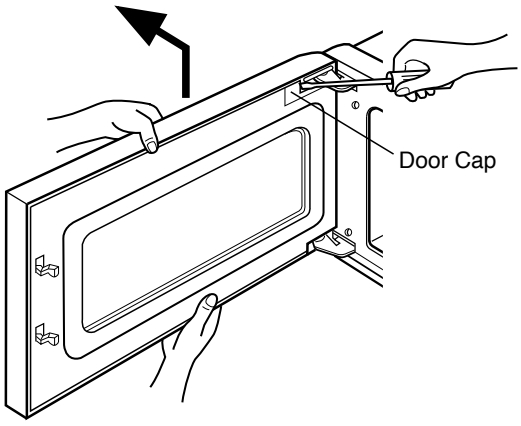

Figure 13

F. DISASSEMBLING DOOR (Figure 14)

(1) Remove the choke cover by using knife blade or small screw driver, etc.

CAUTION: Be careful not to damage door seal plate with the screwdriver.

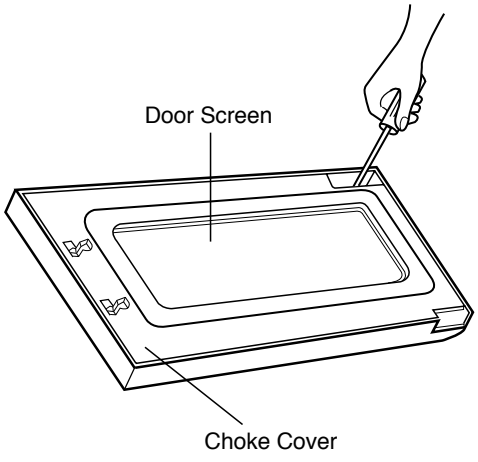

Figure 14

G. ASSEMBLING DOOR

(1) When mounting the door assembly to the oven assembly, be sure to adjust the door assembly parallel to the chassis. Also adjust so the door has no play between the inner door surface and oven frame assembly. If the door assembly is not mounted properly, microwaves may leak from the clearance between the door and the oven.

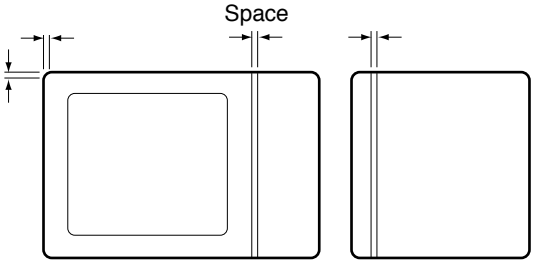

H. REMOVING THE VENTILATION FAN ASS'Y

(1) Remove the vent grille from the front of the oven.
(2) Remove the mounting plate by removing two mounting rods securing itself to the unit. (See Figure 15)
(3) Remove the two screws securing the mount-all and one screw securing the ventilation fan ASS'Y. (See Figure 16)

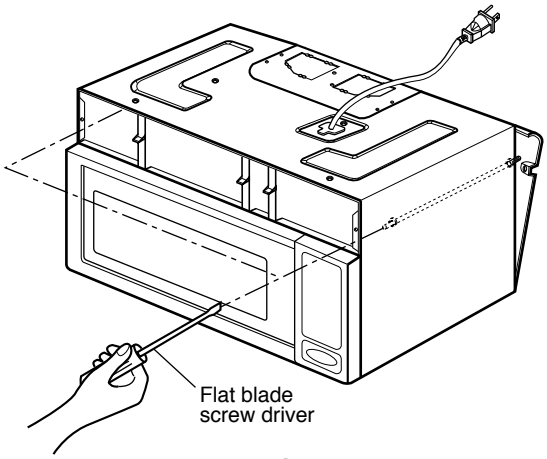

Figure 15

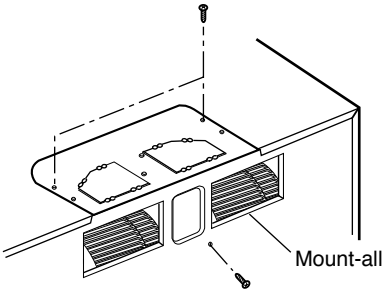

Figure 16

I. REMOVING THE TURNTABLE MOTOR

(1) Remove the turntable.
(2) Remove the rotating ring on the bottom plate of oven cavity.
(3) Remove the base plate by removing 5 screws securing it to the oven cavity. (Figure 17)
(4) Disconnect the leadwire from the turntable motor terminals.
(5) Remove the 2 screws securing the turntable motor to the oven cavity ASS'Y. (Figure 18)

NOTES:

- Remove the leadwire from the turntable motor VERY CAREFULLY.
- Be sure to grasp the connector not the wires when removing.

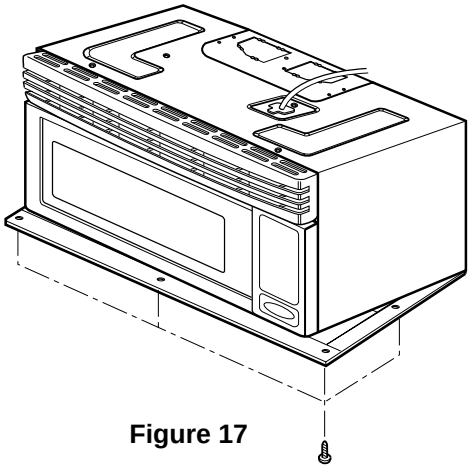

Figure 17

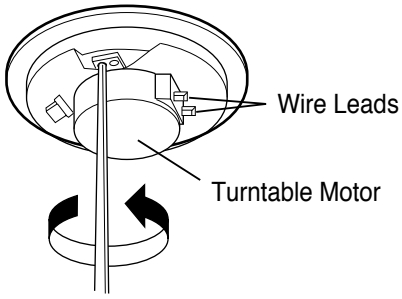

Figure 18

INTERLOCK SYSTEM

INTERLOCK MECHANISM

The door lock mechanism is a device which has been specially designed to eliminate completely microwave activity when the door is opened during cooking and thus to prevent the danger resulting from the microwave leakage.

ADJUSTMENT PROCEDURES

To avoid possible exposure to microwave energy leakage, adjust the door latches and interlock switches, using the following procedure.

ONLY AUTHORIZED SERVICE PERSONNEL SHOULD MAKE THIS ADJUSTMENT

The Interlock Monitor and Primary Interlock Switch act as the final safety switch protecting the user from microwave energy. The terminals between “COM” and “NC” of the Interlock Monitor must close when the door is opened. After adjusting the Interlock Monitor Switch, make sure that it is correctly connected.
Mounting of the primary/monitor/secondary switches to the latch board.

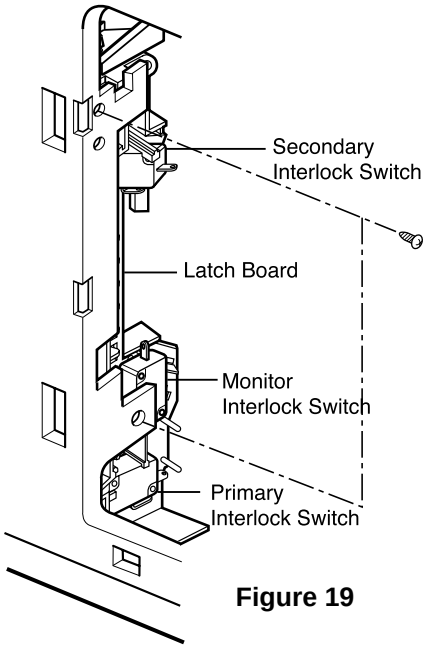

Figure 19

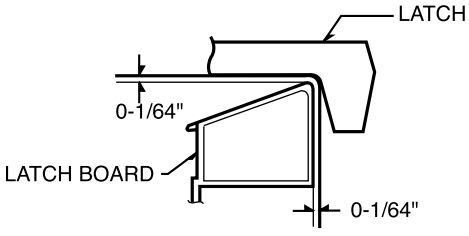

Figure 20

CHECK THE DOOR LATCH AND SWITCH CLOSING.

NOTE:

The outer cover of the microwave oven is removed.

(1) Set the microwave oven on its side so that you can see the latch board and the switches, as shown in Figure 19.

(2) Close the door tightly and check gaps A and B to be sure they are no more than 1/64” (0.5 mm). See Figure 20 for close-up view of gaps A and B (door latches). If all gaps are less than 1/64” (0.5 mm), adjustment of the latch board may not be necessary. Go to Steps 5 and 6 to check the sequence of the switches.

NOTE:

To correct sequence of the Primary Interlock Switch, Secondary Interlock Switch and the Interlock Monitor Switch is very important.
If any gap is larger than 1/64” (0.5 mm), you will need to adjust the latch board”. Go to step 3 and follow all steps in order.

ADJUST THE LATCH AND SWITCH CLOSING

(3) Loosen the two screws holding the plastic latch board as shown.

(4) With the oven door closed tightly, move the latch board upward toward the top of the oven and/or away from the door latch until the gaps are less than 1/64” (0.5 mm).
Hold the latch board tightly in this position until you check the sequence of the switches in steps 5 and 6.

TEST THE LATCH AND SWITCH SEQUENCE

(5) Open the oven door slowly. Watch the door latch, the Secondary Switch. Release Rod and Lever on the switches to make sure they are zero to the body of the switches in the following sequence:

- Primary Interlock Switch
- Secondary Interlock Switch
- Interlock Monitor Switch

Adjust the latch board until the switches operate in this sequence. See Steps 3 and 4.

(6) Close the oven door slowly and be sure it is tightly closed. Watch the three switches to make sure they are zero to the body of the switches in the following sequence:

- Interlock Monitor Switch
- Primary Interlock Switch
- Secondary Interlock Switch

NOTE: The Interlock Monitor Switch is an added safety check on the Primary and Secondary Interlock Switches. If the Primary and Secondary Interlock Switches allow the oven to operate with the door open, the Monitor Switch will blow the fuse.

(7) When you achieve the proper sequence of switches in Steps 5 and 6, tighten the latch board screws at that point.

TEST THE MICROWAVE ENERGY LEAKAGE

Make sure the microwave energy leakage is below the limit of 1mW/cm^2 (with a 275 ml water load) and 5mW/cm^2 (with a 275 ml water load without the cabinet) when measured with a survey meter.

INTERLOCK CONTINUITY TEST

A. PRIMARY INTERLOCK SWITCH TEST

When the door is opened slowly, an audible **click** should be heard at the same time or successively at intervals and the latches should activate the switches with an audible **click**.
If the latches do not activate the switches when the door is closed, the switches should be a adjusted in accordance with the adjustment procedure.
Disconnect the wire lead from the primary switch.
Connect the ohmmeter leads to the common (COM) and normally open (NO) terminal of the switch. The meter should indicate an open circuit in the door open condition.
When the door is closed, the meter should indicate a closed circuit.
When the primary switch operation is abnormal, make the necessary adjustment or replace the switch only with the same type of switch.

B. SECONDARY INTERLOCK SWITCH TEST

Disconnect the wire lead from the secondary switch.
Connect the ohmmeter leads to the common (COM) and normally open (NO) terminals of the switch. The meter should indicate a open circuit in the door open condition. When the door is closed, meter should indicate an closed circuit. When the secondary switch operation is abnormal, make the necessary adjustment or replace the switch only with the same type of switch.

C. MONITOR SWITCH TEST

Disconnect the wire lead from the monitor switch.
Connect the ohmmeter leads to the common (COM) and normally closed (NC) terminals of the switch. The meter should indicate closed circuit in the door open condition. When the door is closed, meter should indicate an open circuit. When the monitor switch operation is abnormal, replace with the same type of switch.
NOTE: After repairing the door or the interlock system, it is necessary to do this continuity test before operating the oven.

COMPONENTS	TEST PROCEDURE		RESULTS	
SWITCHES (Wire leads removed)	Check for continuity of the switch with an Ohm-meter		Door open	Door closed
	Primary Switch	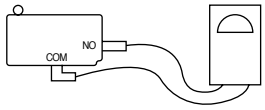		
	Monitor Switch	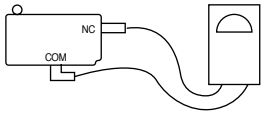		
	Secondary Switch	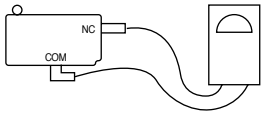		
	NOTE : After checking for the continuity of switches, make sure that they are connected correctly.			

WARNING : FOR CONTINUED PROTECTION AGAINST EXCESSIVE RADIATION EMISSION, REPLACE ONLY WITH IDENTICAL REPLACEMENT PARTS.

TYPE NO. SZM-V16-FA-63 OR VP-533A-OF FOR PRIMARY SWITCH
TYPE NO. SZM-V16-FA-62 OR VP-532A-OF FOR MONITOR SWITCH
TYPE NO. SZM-V16-FA-63 OR VP-533A-OF FOR SECONDARY SWITCH

- CAUTIONS -

- DISCONNECT THE POWER SUPPLY CORD FROM THE WALL OUTLET WHENEVER REMOVINGING THE CABINET FROM THE UNIT. PROCEED WITH THE TESTS ONLY AFTER DISCHARGING THE HIGH VOLTAGE CAPACITOR AND REMOVING THE WIRE LEADS FROM THE PRIMARY WINDING OF THE HIGH VOLTAGE TRANSFORMER. (SEE Figure 21)
- ALL OPERATIONAL CHECKS WITH MICROWAVE ENERGY MUST BE DONE WITH A LOAD (1 LITER OF WATER IN CONTAINER) IN THE OVEN.

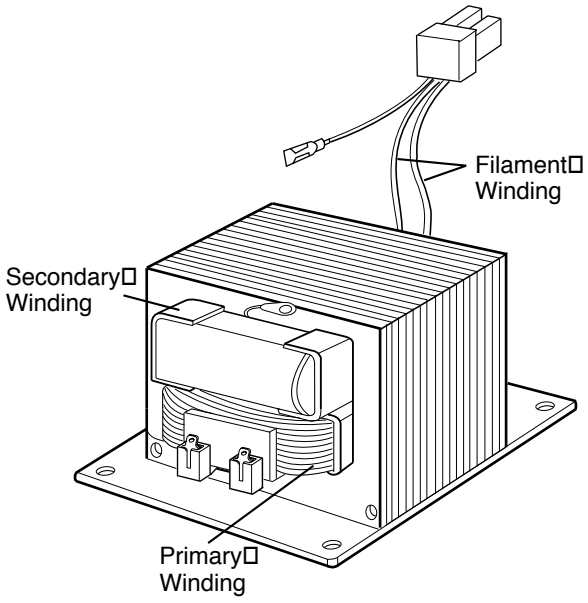

Figure 21

A. TEST PROCEDURES

COMPONENTS	TEST PROCEDURES	RESULTS
MAGNETRON (Wire leads are removed)	1) Measure the resistance: Across the filament terminals of the magnetron with an ohm-meter on Rx1 scale. 2) Measure the resistance: Between each filament terminal of the magnetron and the chassis ground with an ohm-mater on high test scale.	Normal reading: Less than 1 ohm. Normal reading: Infinite ohms. **NOTE:** Replace the magnetron, if the magnetron checks and all of the high voltage component tests are good, but the unit still does not heat a load.
HIGH-VOLTAGE TRANSFORMER (Wire leads are removed)	1) Measure the resistance: With an ohm-meter on Rx1 scale. a. Primary winding; b. Filament winding; c. Secondary winding; 2) Measure the resistance: With an ohm-meter on highest scale. a. Primary winding to ground; b. Filament winding to ground;	Normal readings: Approx. 0.3 to 0.5 ohm. Less than 0.1 ohm. Approx. 65 to 120 ohms. Normal readings: Infinite ohms. Infinite ohms.

NOTE: A MICROWAVE ENERGY LEAKAGE TEST MUST ALWAYS BE PERFORMED WHEN THE UNIT IS SERVICED FOR ANY REASON.

COMPONENTS	TEST PROCEDURES	RESULTS
HIGH-VOLTAGE CAPACITOR	Measure the resistance: (1) Terminal to terminal 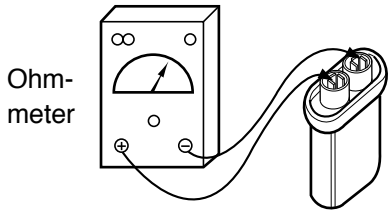 **Figure 22**	Normal reading: Momentarily indicates several ohms, and then gradually returns to infinite ohms. Abnormal reading: Indicates continuity or infinite ohms from the beginning.
	(2) Terminal to case 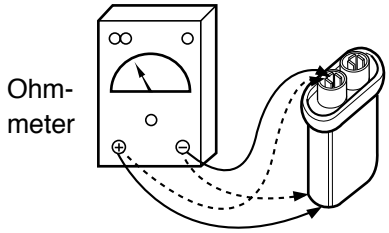 **Figure 23**	Normal readings: Infinite. Abnormal reading: Indicates continuity.
HIGH-VOLTAGE DIODE	Measure the continuity: (1) Forward 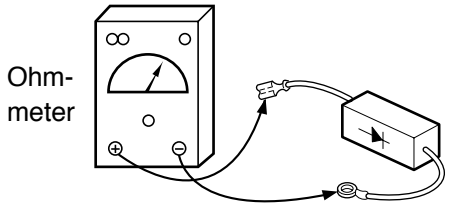 **Figure 24**	Normal readings: continuity. Abnormal reading: Infinite.
	(1) Reverse 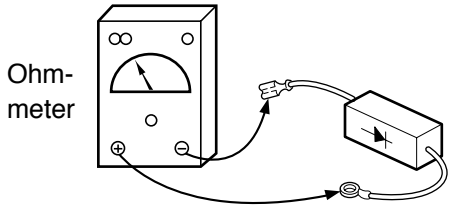 **Figure 25**	Normal readings: Infinite. Abnormal reading: continuity.

<table>
<tr><th>COMPONENTS</th><th>TEST PROCEDURES</th><th>RESULTS</th></tr>
<tr><td>CIRCUIT BOARD</td><td colspan="2">See page 7-19 for “CHECKOUT PROCEDURES FOR THE CIRCUIT BOARD”</td></tr>
<tr><td>TOUCH KEY BOARD</td><td>Measure the resistance between terminal pins of connector KEY CON.
NOTE:
When reconnecting the FPC connector, make sure that the holes on the FPC connector are properly engaged with hooks on the plastic fastener.

MATRIX CIRCUIT FOR TOUCH KEY BOARD

CONNECTOR(KEY CON)

 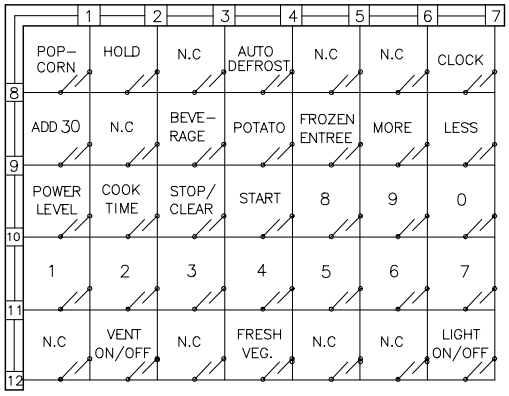

Figure 26</td><td>
<table>
<tr><td rowspan="2">Resistance value</td><td>When touched</td><td>When not touched</td></tr>
<tr><td>Less than 400 ohms</td><td>More than 1 mega ohm</td></tr>
</table>
FPC CONNECTOR
Top

 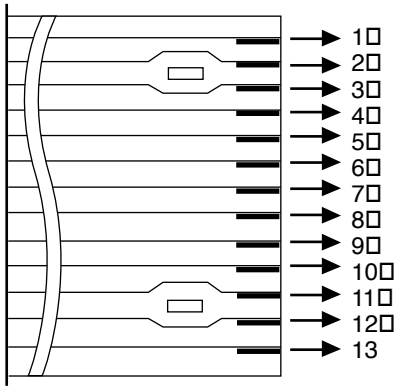

Figure 27</td></tr>
</table>

NOTE: A MICROWAVE ENERGY LEAKAGE TEST MUST ALWAYS BE PERFORMED WHEN THE UNIT IS SERVICED FOR ANY REASON.

COMPONENTS	TEST PROCEDURES	RESULTS		
RELAY2	Check for continuity of relay 2 with an ohm-meter. (Remove wire leads from relay 2 and operate the unit.) 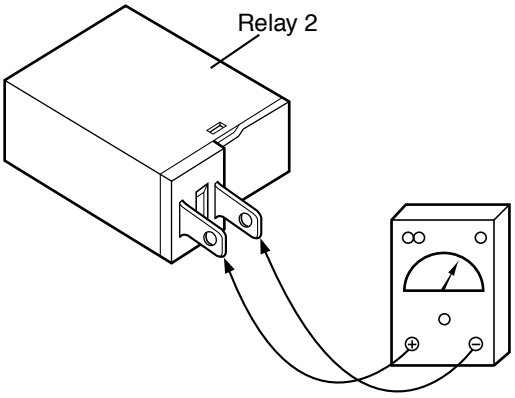 **Figure 28**	POWER LEVEL	∞ ○	∞ ○
		1	4 sec	18 sec
		2	6 sec	16 sec
		3	8 sec	14 sec
		4	10 sec	12 sec
		5	12 sec	10 sec
		6	14 sec	8 sec
		7	16 sec	6 sec
		8	18 sec	4 sec
		9	20 sec	2 sec
		10	22 sec	0

NOTES:
- A MICROWAVE ENERGY TEST MUST ALWAYS BE PERFORMED WHEN THE UNIT IS SERVICED FOR ANY REASON.
- MAKE SURE THE WIRE LEADS ARE IN THE CORRECT POSITION.
- WHEN REMOVING THE WIRE LEADS FROM THE PARTS, BE SURE TO GRASP THE CONNECTOR, NOT THE WIRES.

B. CHECKOUT PROCEDURES

(1) CHECKOUT PROCEDURES FOR FUSE BLOWING

CAUTION: REPLACE BLOWN FUSE WITH 20 AMPERE FUSE.

PROBLEMS	CAUSES
Fuse blows immediately after the door is closed.	Improper operation of the primary interlock, secondary interlock switches and/or the interlock monitor switch.
Fuse blows immediately after the door is opened.	
Fuse blows when the door is closed and START key is touched.	Malfunction of the high voltage transformer; the high voltage capacitor including the diode, the magnetron, the blower motor or the circuit board.

NOTES:
- If the fuse is blown by an improper switch operation, replace the defective switches and the fuse at the same time. After replacing the defective switches with new ones, make sure that they are correctly connected.
- Check for microwave energy leakage according to INTERLOCK ADJUSTMENT PROCEDURES on page 7-11 when the primary interlock, secondary interlock switches and/or the interlock monitor switches are adjusted or replaced.

(2) CHECKOUT PROCEDURES FOR RELAY.

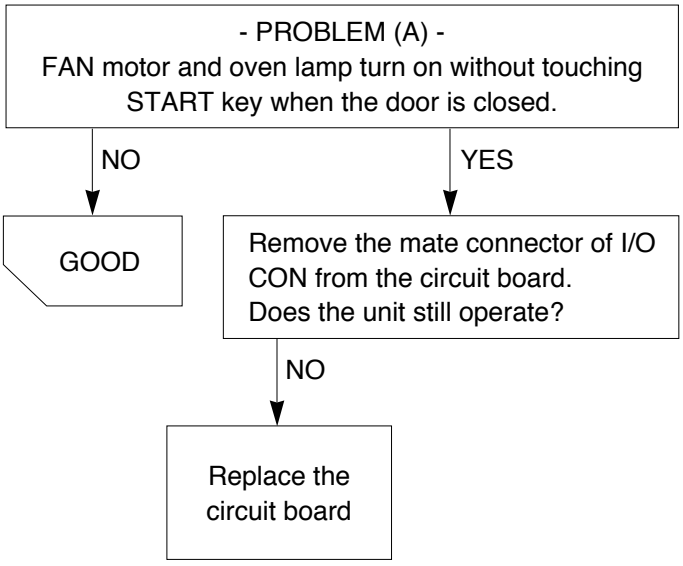

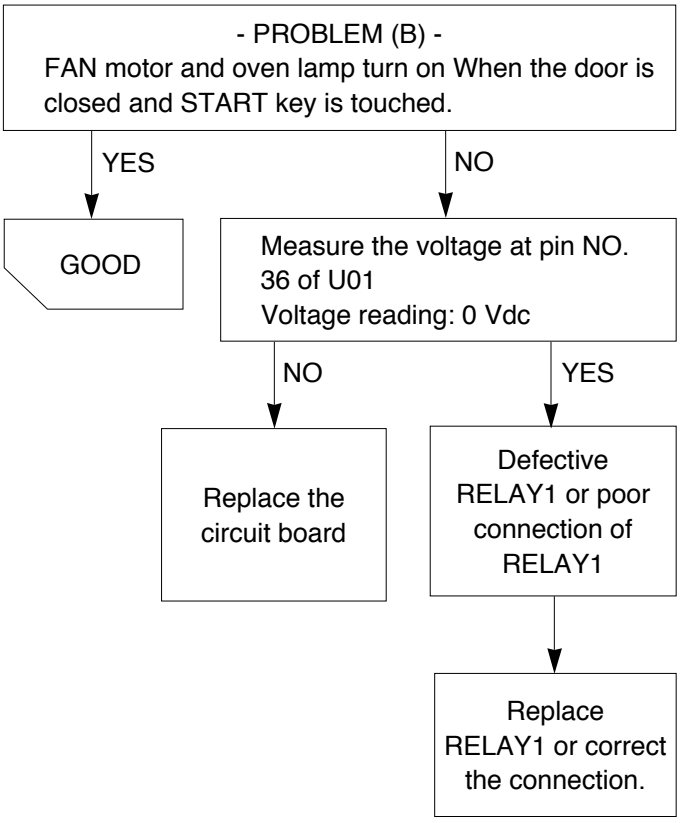

(3) CHECKOUT PROCEDURES FOR CIRCUIT BOARD

The following symptoms indicate a defective circuit board.

1) The start function fails to operate but the high voltage Systems, the interlock switches, the door sensing and the relay check good.
2) The unit with a normal relay continuously operates.
3) Proper temperature measurement is not obtained.
4) The buzzer does not sound or continues to sound.
5) Some segments of one or more digits do not light up, or they continue to light up, or segments light when they should not.
6) Wrong figures appear.
7) The figures of all digits.
8) Some of the indicators do no flicker light up.
9) The clock does not keep time properly.

NOTE: A MICROWAVE ENERGY LEAKAGE TEST MUST ALWAYS BE PERFORMED WHEN THE UNIT IS SERVICED FOR ANY REASON.

C. TROUBLE SHOOTING

Before following this troubleshooting read “TRIAL OPERATION” on page 6-1.

- “DISPLAY” Problems, “A” thru “C”
- “HELP UP” Problems, “D” thru “E”
- “BUZZER Problems, “F”

PROBLEM - A: “PLEASE TOUCH CLOCK PAD” does not appear in display window when power supply cord is plugged into wall outlet.

1 Check: 1. POWER SUPPLY
2. FUSE (See “CHECKOUT PROCEDURES FOR FUSE BLOWING: on page 7-18)
3. OVEN CAVITY THERMOSTAT

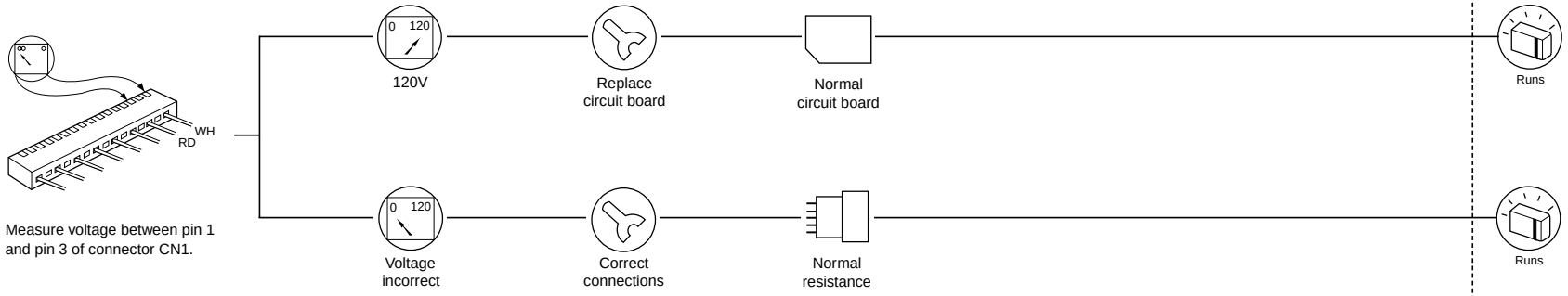

PROBLEM - B: Display does not show correct numbers and/or correct indications when programmed.

1

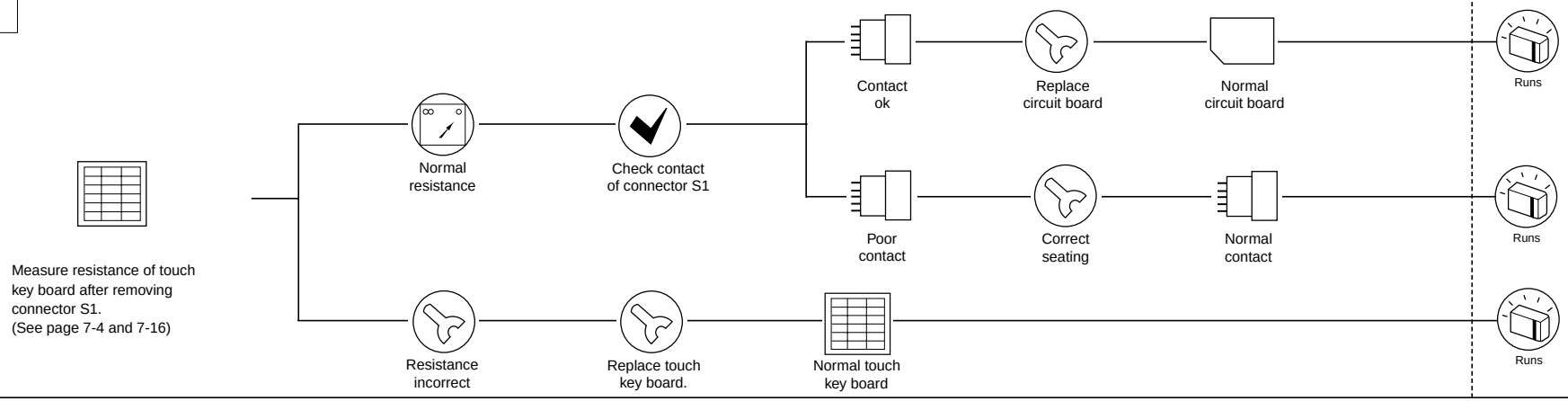

PROBLEM - E: Unit does not heat up even if display counts down when START key is touched for "HIGH POWER" cooking.

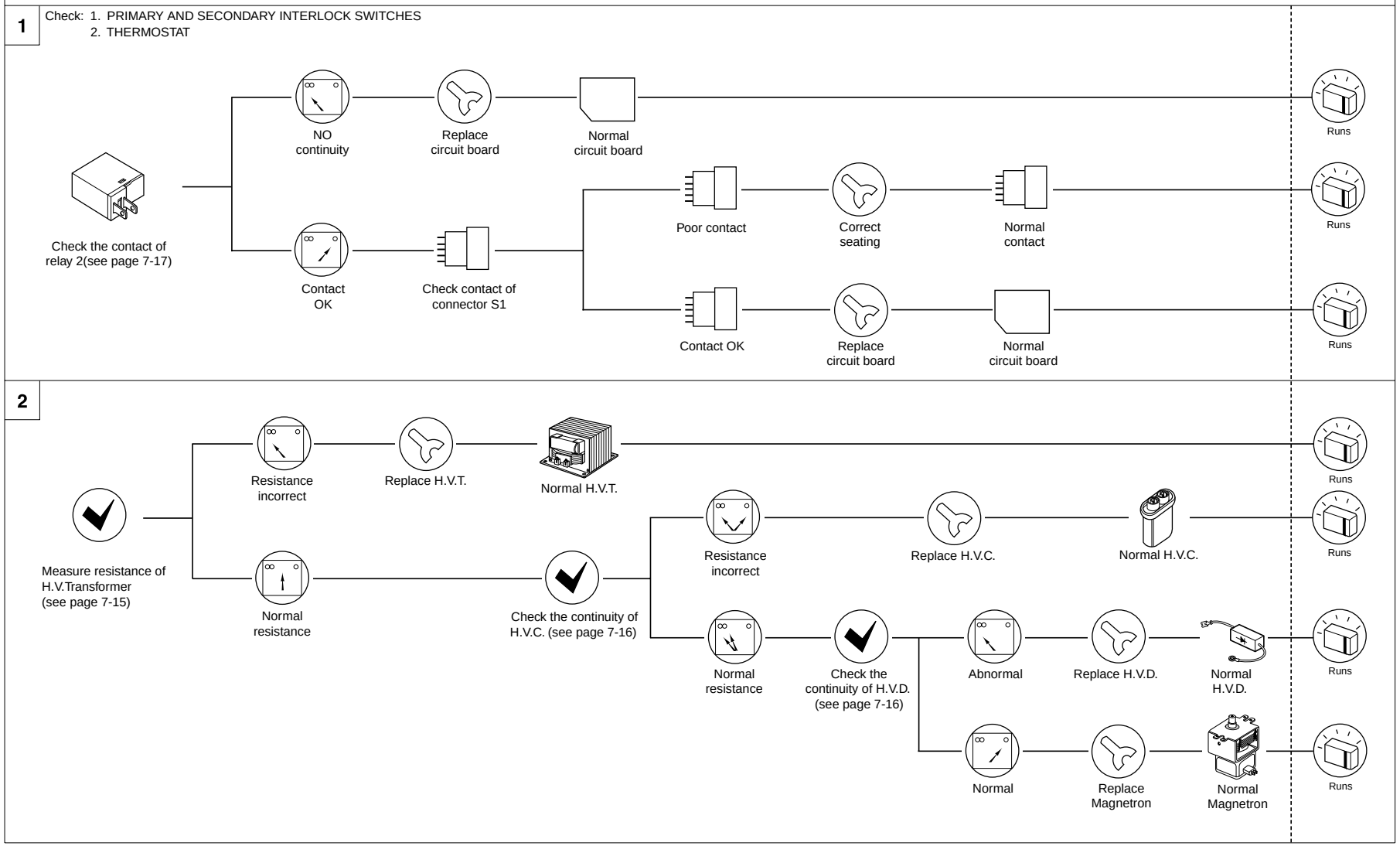

PROBLEM - F: No buzzing when touching the key, between stages or at end of cooking

1

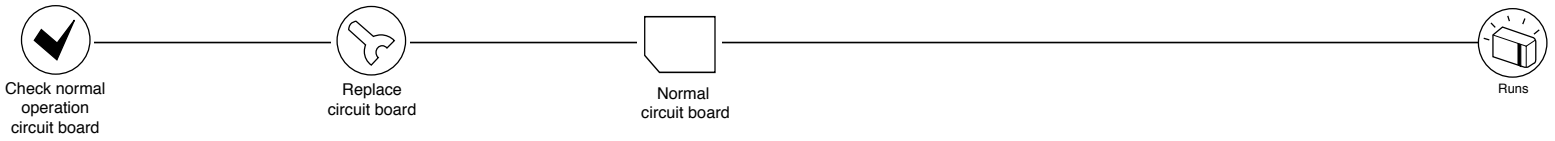

PROBLEM - G: Ventilation fan does not operate when “FAN HIGH/LOW” key is touched.

1 Check: 1. POWER SUPPLY
2. FUSE

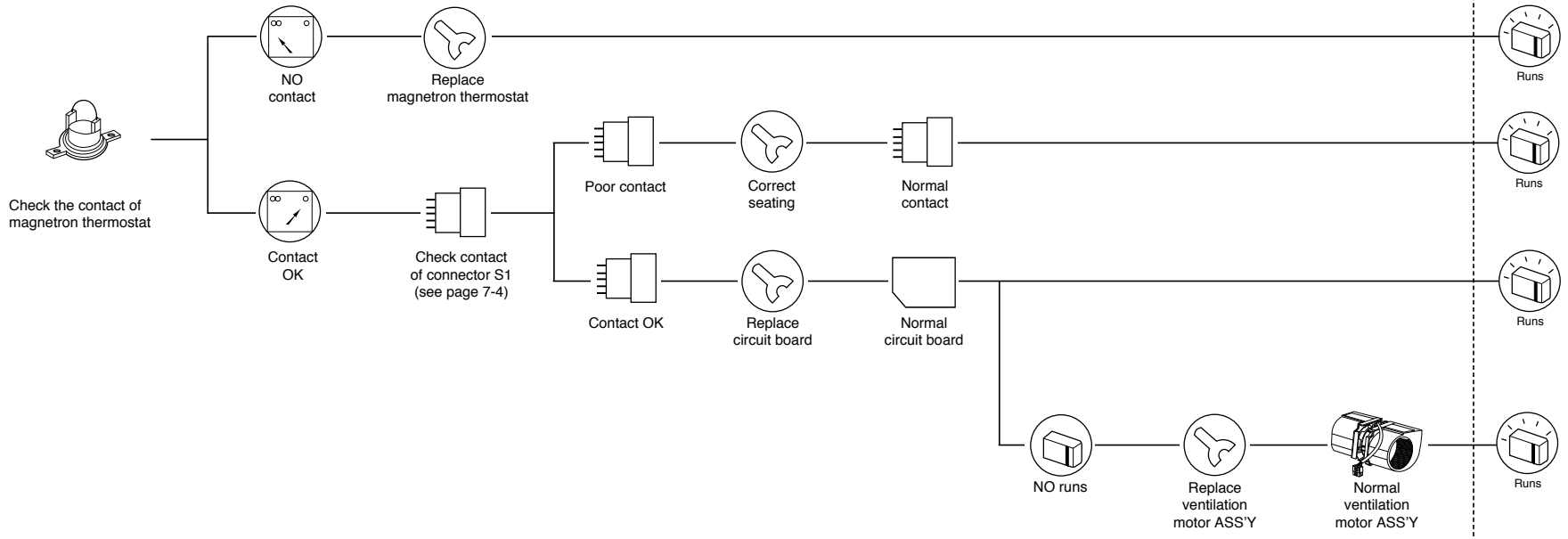

EXPLODED VIEW

DOOR PARTS

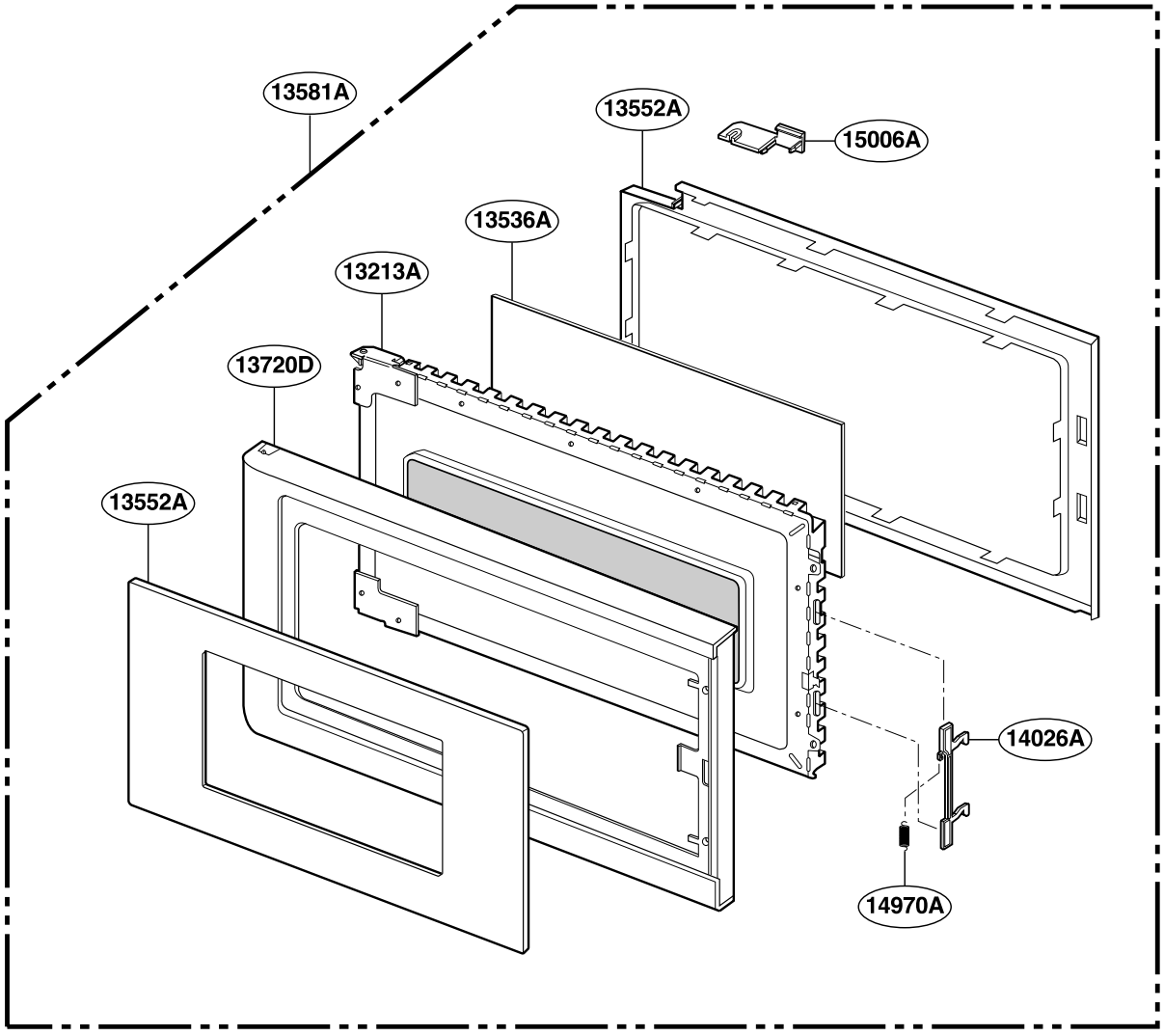

CONTROLLER PARTS

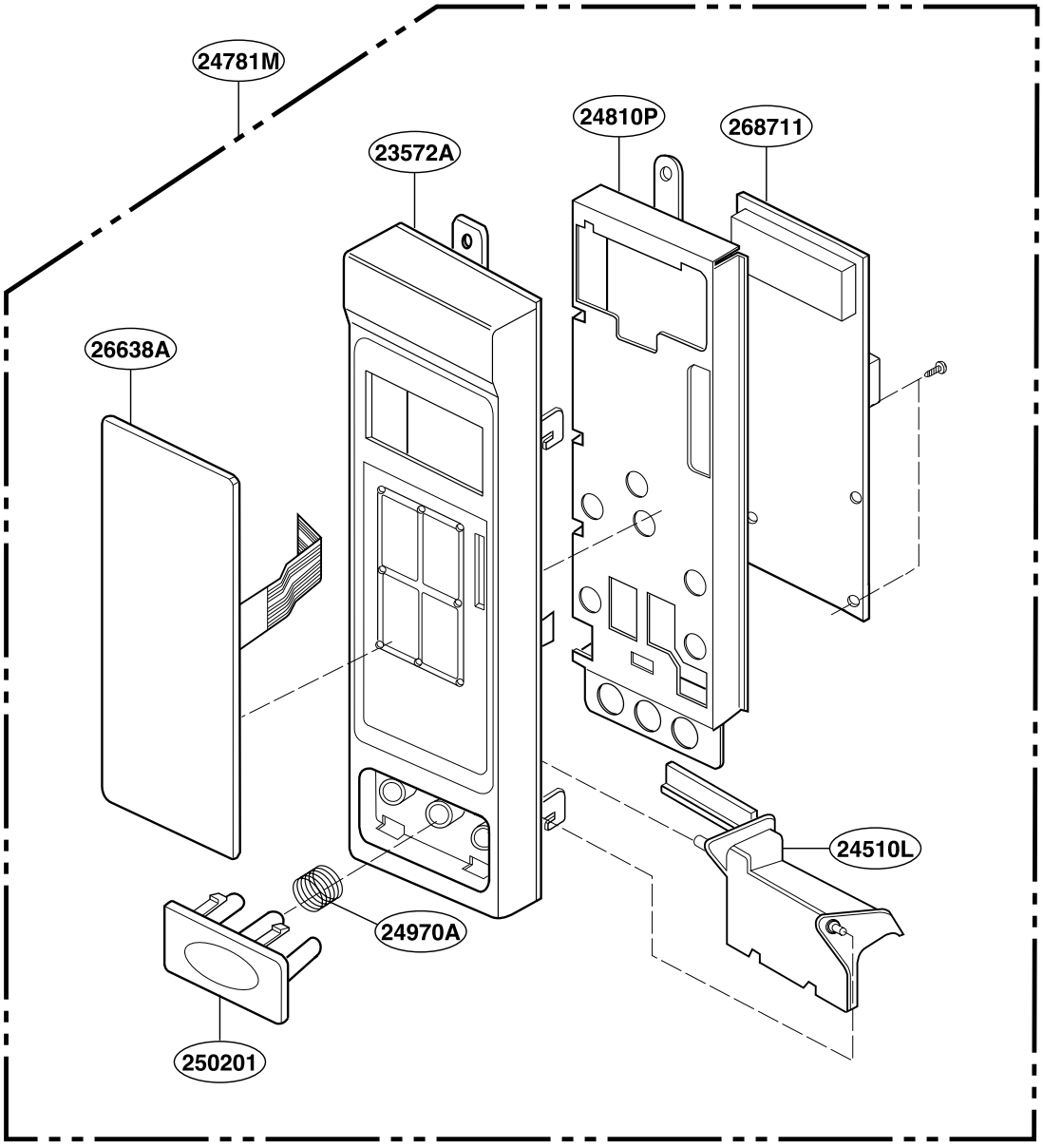

OVEN CAVITY PARTS

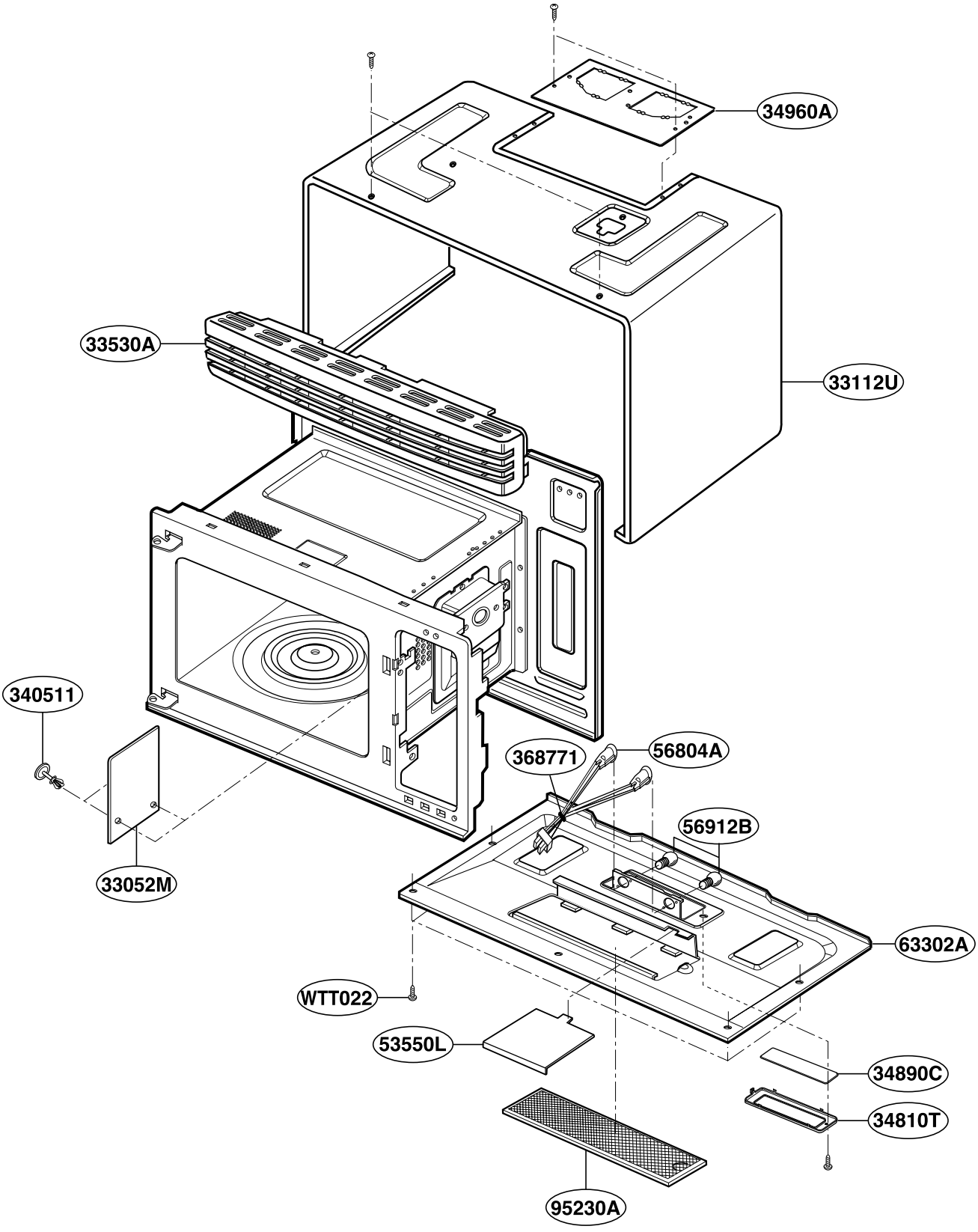

LATCH BOARD PARTS

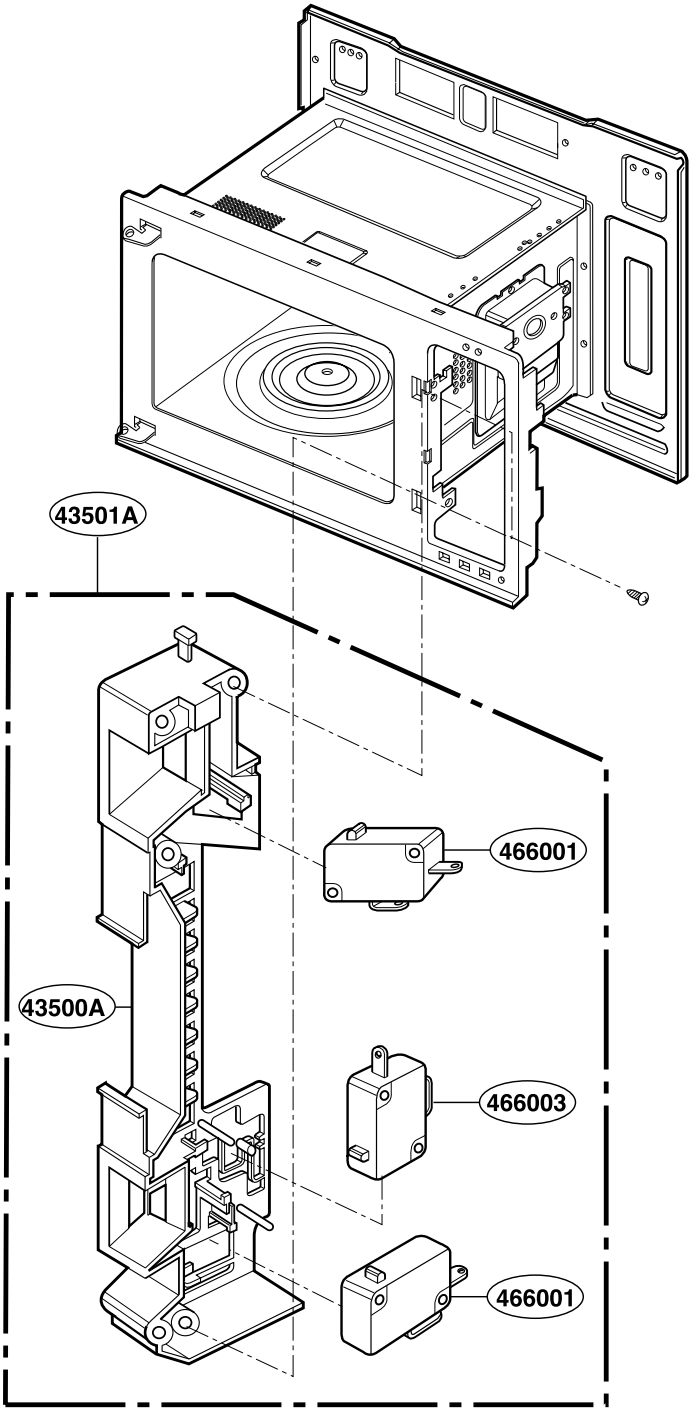

INTERIOR PARTS (I)

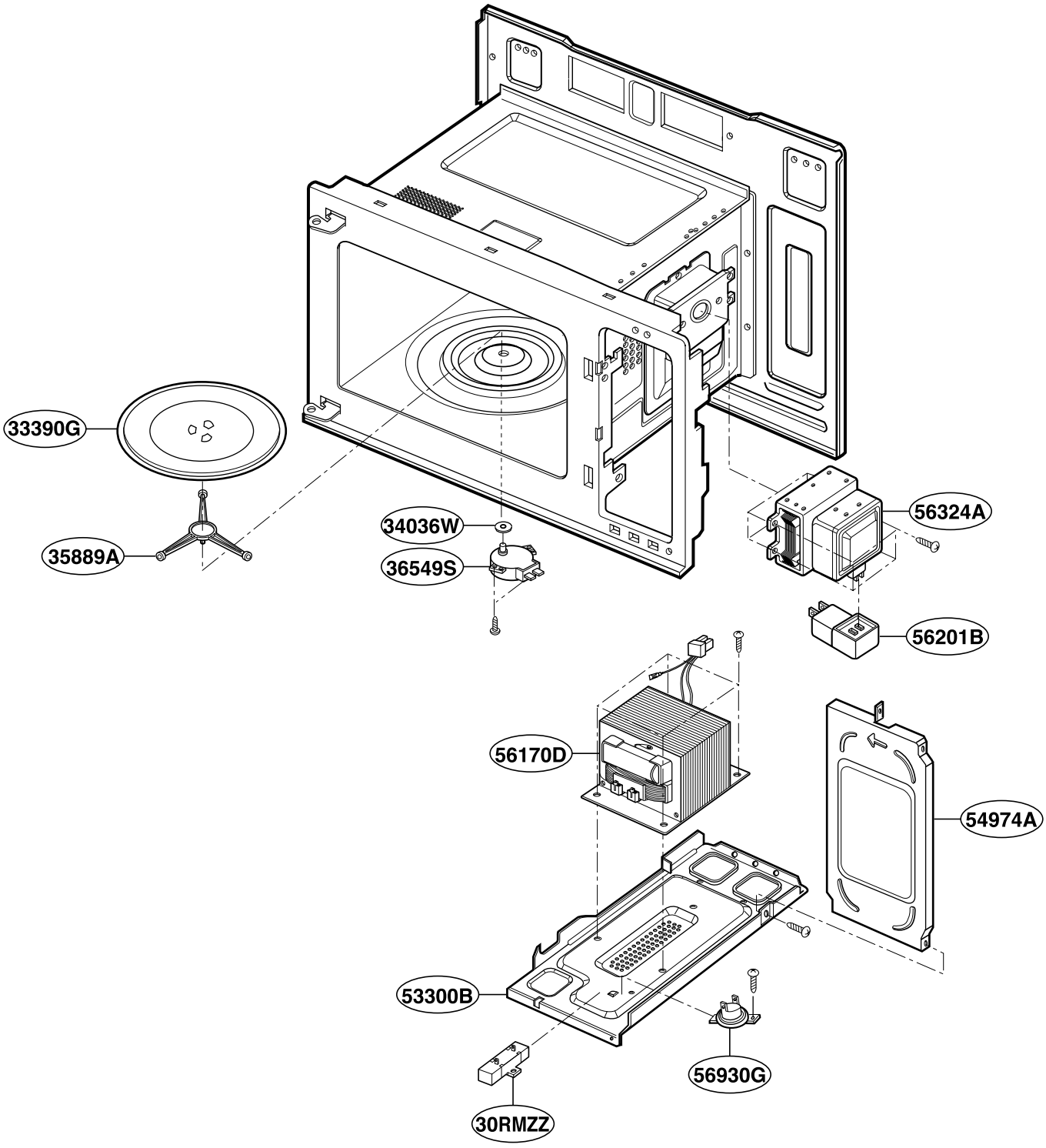

INTERIOR PARTS (II)

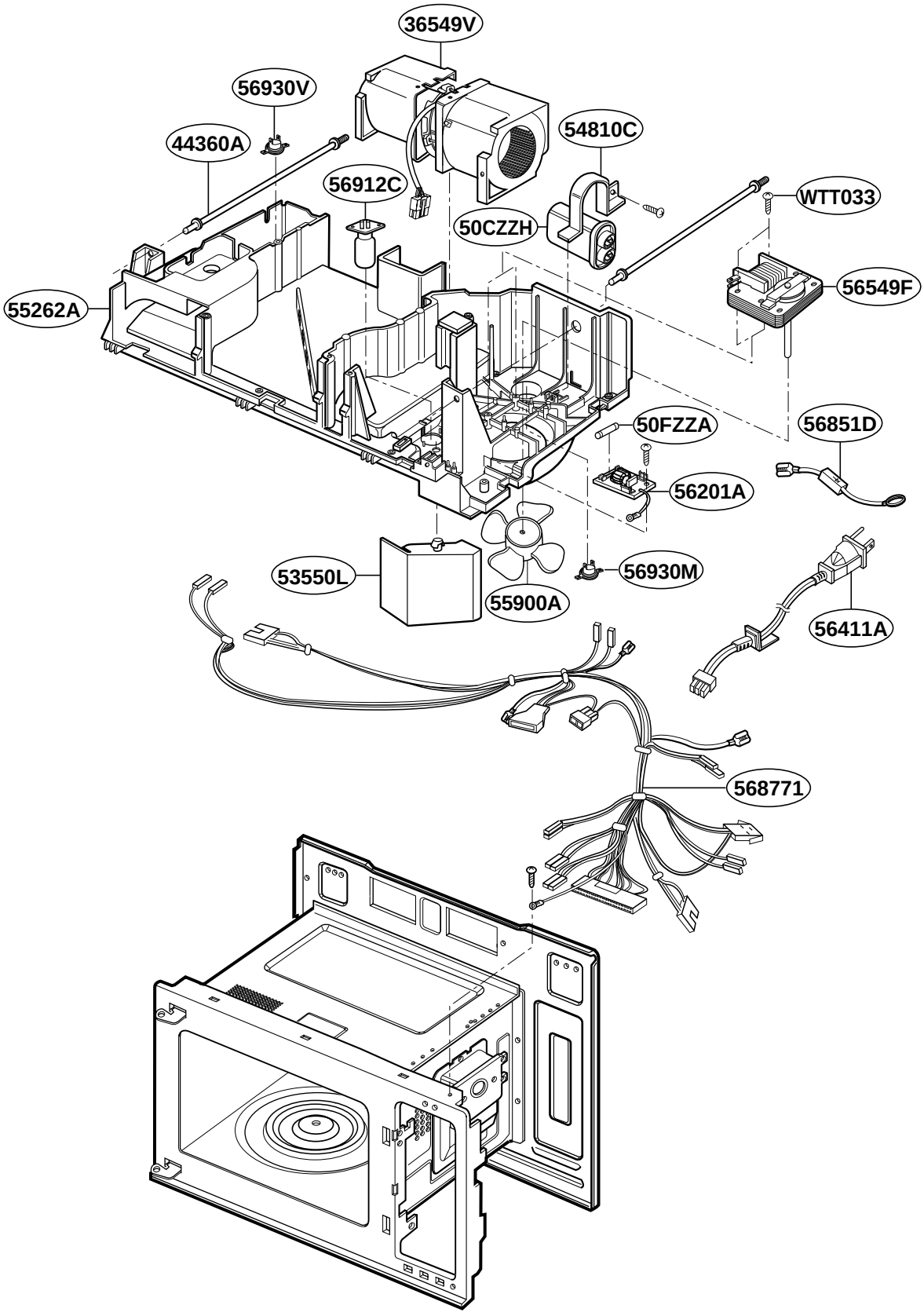

INSTALLATION PARTS

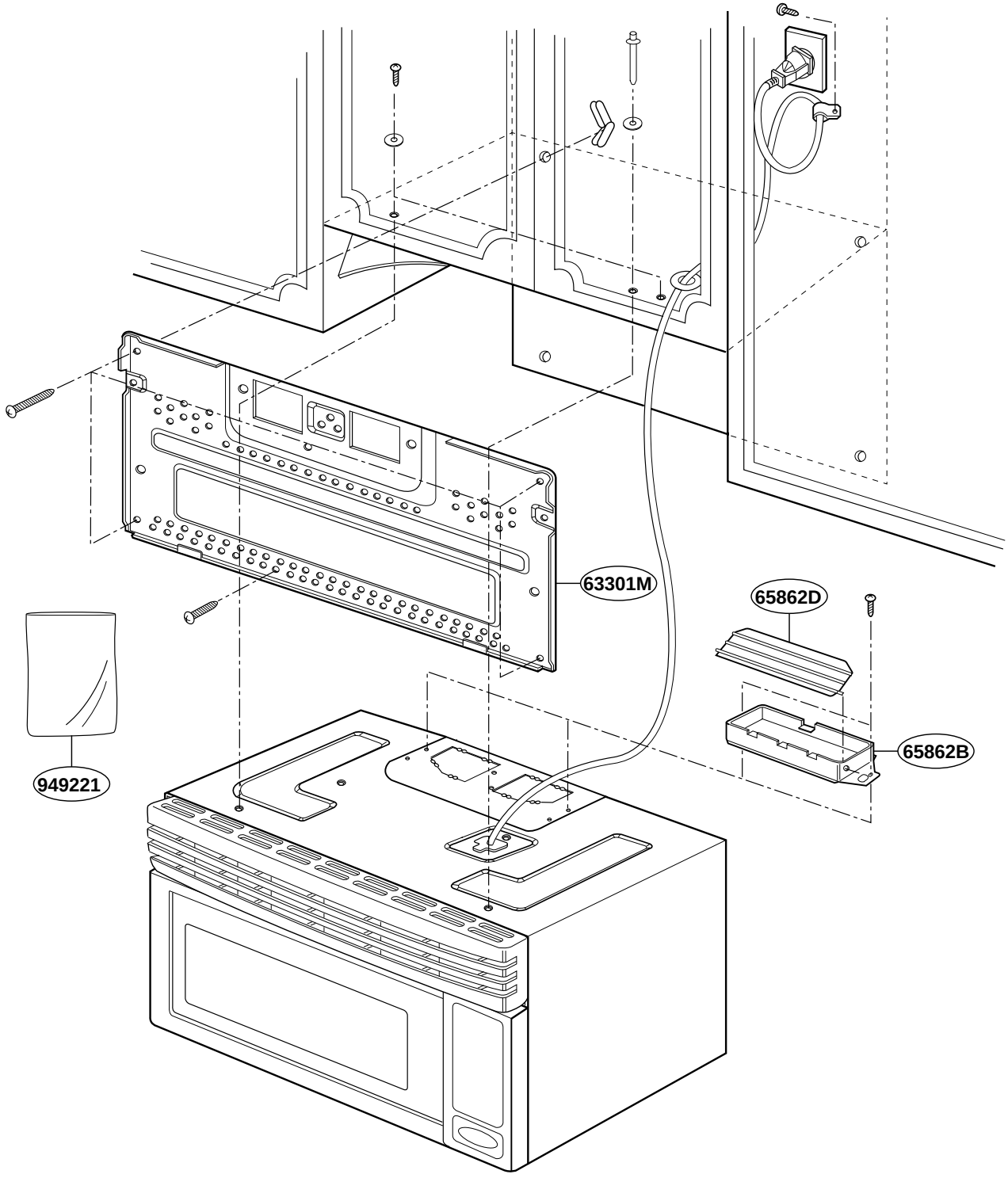

REPLACEMENT PARTS LIST

(See Illustration “DOOR PARTS”)

LOC. NO.	PART NO.	DESCRIPTION	SVC	ALTER
13213A	3213W1A031B	DOOR FRAME ASSY	R	
13352A	4890W1A008A	GLASS	R	
13536A	3536WRA001M	SEAL TAPE	R	
13552A	3552W1A028A	CHOKE COVER	R	
13581A	3581W1A220B	DOOR ASSY,[MWO]	S	
13720D	3720W0D156B	PANEL,[DOOR] / WHITE COLOR: 3720W0D156A	R	
14026A	4026W2A012A	LATCH	R	
14970A	4970WRA001C	SPRING	R	
15006A	5006W3A010A	CAP	R	

(See Illustration “CONTROLLER PARTS”)

LOC. NO.	PART NO.	DESCRIPTION	SVC	ALTER
23572A	3572W0A182B	CONTROL PANEL / WHITE COLOR: 3572W0A182A	R	
24510L	4510W3L002A	LEVER,[RELEASE]	R	
24781M	4781W1M221B	CONTROLLER ASSY,[MICOM]	R	
24810P	4810W1P004A	BRACKET,[CONTROL PANEL]	R	
24970A	4B72023A	SPRING	R	
250201	5020W2A134B	BUTTON / WHITE COLOR: 5020W2A134A	R	
26638A	6638W2A322B	KEY MEMBRANE / WHITE COLOR: 6638W2A322A	R	
268711	6871W2S152A	PWB(PCB) ASSY,[MAIN]	R	

(See Illustration “OVEN CAVITY PARTS”)

LOC. NO.	PART NO.	DESCRIPTION	SVC	ALTER
33052M	3052W3M008B	CANOPY,[MICA]	R	
33112U	3112W0U037B	OUT CASE,[U-BENDING] / WHITE COLOR: 3112W0U037A	R	
33530A	3530W0A010B	GRILLE / WHITE COLOR: 3530W0A010A	R	
340511	4051W3A001A	RIVET ASSY	R	
34810T	4810W3G100A	BRACKET,COOKTOP	R	
34890C	4890W4A001B	GLASS	R	
34960A	4960W2G022A	MOUNT	R	
368771	6877W2A003A	LEAD WIRE ASSY	R	
53550L	3550W3L002A	COVER,[LAMP COVER]	R	
56804A	6804W3A001A	LAMP HOLDER	R	
56912B	6912W3B002G	LAMP[OVEN/BASELESS]	R	6912W3B002L
56912B	6912W3Q001A	LAMP[OVEN/BASELESS]	R	
63302A	3302W0A023B	BASE PLATE	R	
95230A	5230W2A001A	FILTER(MECH)	R	
WTT022	1TTL0402422	SCREW TAPPING,TRUSS HEAD	R	

R: SERVICE PARTS
* : ALTERNATE PARTS
N: NOT SERVICE PARTS

(See Illustration “LATCH BOARD PARTS”)

LOC. NO.	PART NO.	DESCRIPTION	SVC	ALTER
43500A	3500W1A004A	BOARD,LATCH	R	
43501A	3501W1A003H	BOARD ASSY,LATCH	R	
466001	3B73362F	SWITCH,MICRO	R	3B73362E
466003	3B73361E	SWITCH,MICRO	R	3B73361D

(See Illustration “INTERIOR PARTS (I)”)

LOC. NO.	PART NO.	DESCRIPTION	SVC	ALTER
30RMZZ	3B72552D	RESISTOR,CEMENT	R	
33390G	3390W1G004A	TRAY,[GLASS]	R	
34036W	4036W3W001A	SEAL,WATER	R	
35889A	5889W2A011A	ROTATING RING ASSY	R	
36549S	2B72754K	MOTOR(CIRC),SYNCHRONOUS	R	
53300B	3300W1B003A	PLATE,[BOTTOM]	R	
54974A	4974W1C001A	GUIDE,[AIR]	R	
56170D	6170W1D002E	TRANSFORMER,HIGH VOLTAGE	R	
56201B	6201W2A019A	FILTER ASSY,CHOKE	R	
56324A	2B71165K	MAGNETRON	R	
56930G	3B70068V	THERMOSTAT,BIMETAL	R	

(See Illustration “INTERIOR PARTS (II)”)

LOC. NO.	PART NO.	DESCRIPTION	SVC	ALTER
36549V	6549W1V005A	MOTOR(CIRC),VENTILATION	R	
44360A	4B73423A	ROD	R	
50CZZH	0CZZW1H002G	CAPACITOR[HIGH VOLTAGE]	R	6120W3H003G
50FZZA	3B74133K	FUSE[ALL]	R	
53550L	3550W3A107A	COVER,[AIR DUCT COVER]	R	
54810C	4810W3C002A	BRACKET,[CAPACITOR]	R	
55262A	5262W0A010A	DUCT	R	
55900A	2B72125A	FAN	R	
56201A	2B72130F	FILTER ASSY,NOISE	R	
56411A	6411W1A014H	POWER CORD ASSY	R	
56549F	6549W2F016D	MOTOR(CIRC),FAN	R	
56851D	6021W3B001M	CABLE ASSY,DIODE	R	6021W3B001M
568771	6877W1A253B	LEAD WIRE ASSY	R	
56930M	6930W1A002C	THERMOSTAT,BIMETAL	R	6930WRT003A
56930V	6930WRT001C	THERMOSTAT,BIMETAL	R	6930WRT003C
WTT033	1TTL0403318	SCREW TAPPING,TRUSS HEAD	R	

R: SERVICE PARTS
* : ALTERNATE PARTS
N: NOT SERVICE PARTS

(See Illustration “INSTALLATION PARTS”)

LOC. NO.	PART NO.	DESCRIPTION	SVC	ALTER
63301M	3301W1A023A	PLATE ASSY	R	
65862B	3B72144A	EXHAUST,ADAPTER	R	
65862D	3B71432A	EXHAUST,DAMPER	R	
949221	4922W5A009A	TEMPLATE	R	
949222	4922W5A010A	TEMPLATE	R	
*01	3828W5A1427	MANUAL,[OWNERS]MWO	R	
*04	3828W5U0071	MANUAL,[INSTALLATION]	R	

R: SERVICE PARTS
* : ALTERNATE PARTS
N: NOT SERVICE PARTS

SCHEMATIC DIAGRAM OF P.C.B

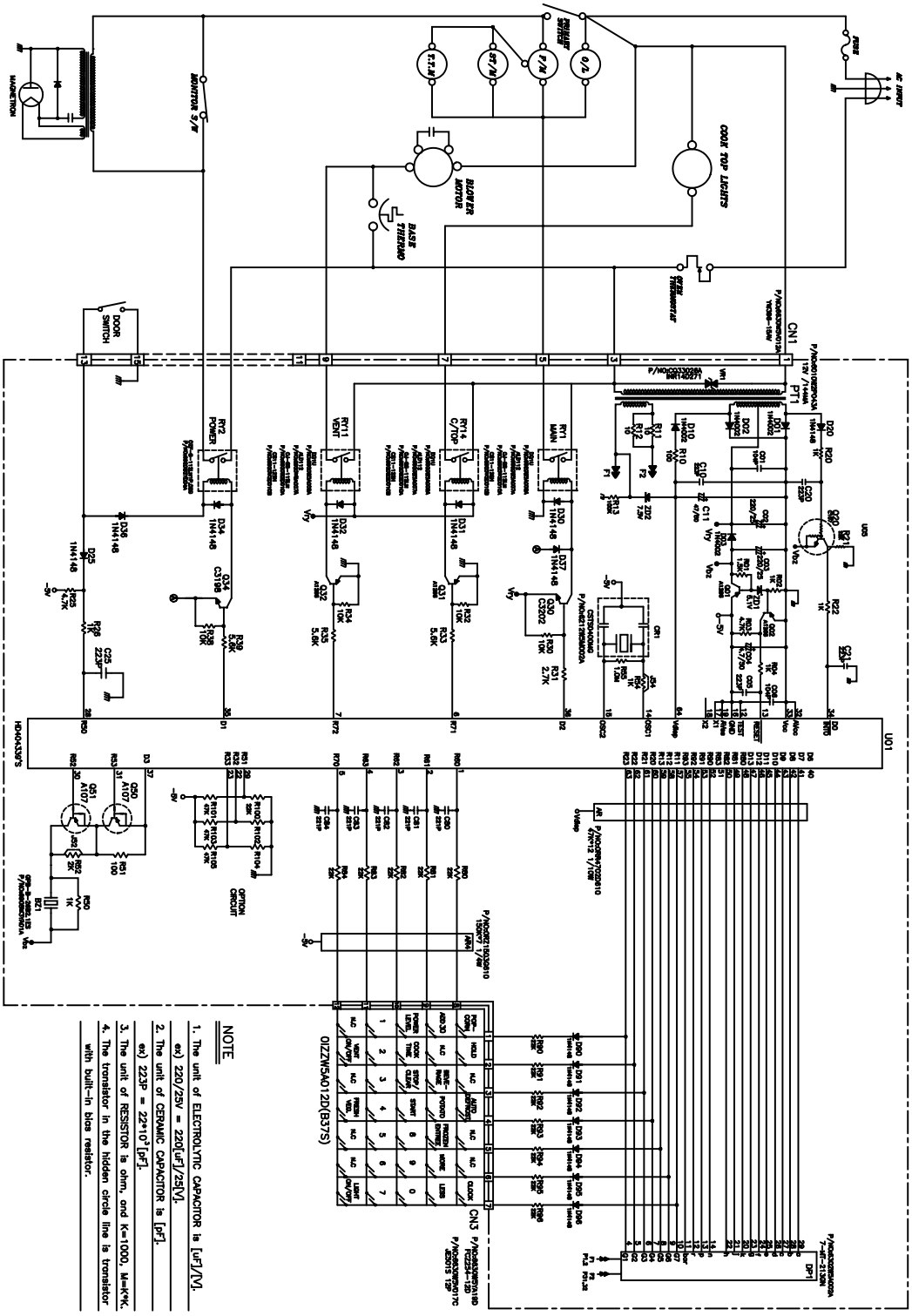

PRINTED CIRCUIT BOARD

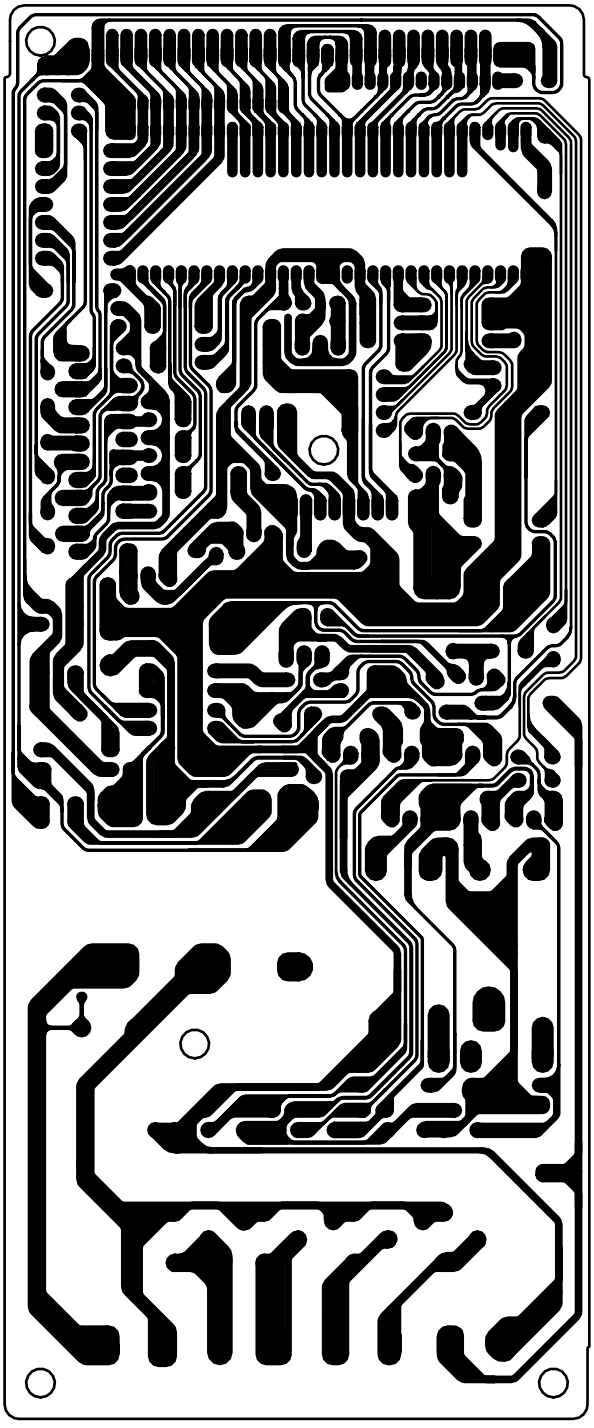

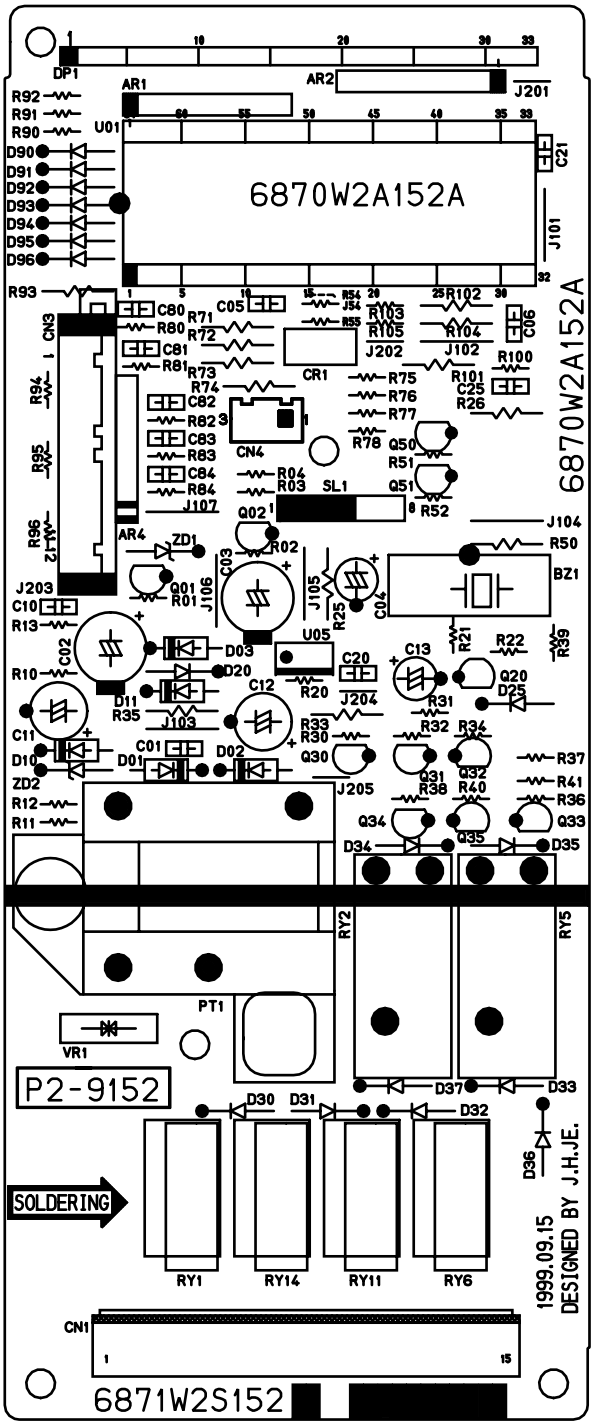

PCB PARTS LIST

(See Illustration “PRINTED CIRCUIT BOARD”)

LOC. NO.	PART NO.	DESCRIPTION	SPECIFICATION	SVC	ALTER
AR4	0RZ1503G610	RESISTOR,ARRAY	SMART 150KOHM 5% 8PIN -	R	
BZ1	6908W3YA01A	BUZZER,PIEZO CERAMIC	GPB-B-26B2.1ES(EXTERNAL)	R	
C01	0CK1040K518	CAPACITOR,CERAMIC (HIGH DIELEC	0.1000UF 50V K B TA26	R	
C02	0CE2272H638	CAPACITOR,AL.ELECTROLYTIC	220UF SME 25V M FM5 TP5	R	
C03	0CE2272H638	CAPACITOR,AL.ELECTROLYTIC	220UF SME 25V M FM5 TP5	R	
C04	0CE4751K638	CAPACITOR,AL.ELECTROLYTIC	4.7UF SM,SA 50V M FM5 TP 5	R	
C05	0CK2230H518	CAPACITOR,CERAMIC (HIGH DIELEC	0.0220UF 25V K B TA26	R	
C06	0CK1040K518	CAPACITOR,CERAMIC (HIGH DIELEC	0.1000UF 50V K B TA26	R	
C10	0CK2230H518	CAPACITOR,CERAMIC (HIGH DIELEC	0.0220UF 25V K B TA26	R	
C11	0CE4761K638	CAPACITOR,AL.ELECTROLYTIC	47UF SM,SA 50V M FM5 TP 5	R	
C20	0CK2230H518	CAPACITOR,CERAMIC (HIGH DIELEC	0.0220UF 25V K B TA26	R	
C21	0CK2230H518	CAPACITOR,CERAMIC (HIGH DIELEC	0.0220UF 25V K B TA26	R	
C25	0CK2230H518	CAPACITOR,CERAMIC (HIGH DIELEC	0.0220UF 25V K B TA26	R	
C80	0CK2210K518	CAPACITOR,CERAMIC (HIGH DIELEC	220PF 50V K B TA26	R	
C81	0CK2210K518	CAPACITOR,CERAMIC (HIGH DIELEC	220PF 50V K B TA26	R	
C82	0CK2210K518	CAPACITOR,CERAMIC (HIGH DIELEC	220PF 50V K B TA26	R	
C83	0CK2210K518	CAPACITOR,CERAMIC (HIGH DIELEC	220PF 50V K B TA26	R	
C84	0CK2210K518	CAPACITOR,CERAMIC (HIGH DIELEC	220PF 50V K B TA26	R	
CN1	6630W5V012A	CONNECTOR (CIRC),WAFER	YW396-15AV(2,4,...,14VOID)	R	
CN3	6630W5YA19D	CONNECTOR (CIRC),WAFER	FCZ254-12D	R	6630W5V017C
CR1	6212W5M002A	RESONATOR	CSTS0400MG06-T2 MURATA 4.0MHZH	R	
CU4	4850W4C001A	CUSHION	3.5MM	R	
D01	0DD400209AA	DIODE,RECTIFIER	1N4002 TP PYUNG CHANG	R	
D02	0DD400209AA	DIODE,RECTIFIER	1N4002 TP PYUNG CHANG	R	
D03	0DD400209AA	DIODE,RECTIFIER	1N4002 TP PYUNG CHANG	R	
D10	0DD400209AA	DIODE,RECTIFIER	1N4002 TP PYUNG CHANG	R	
D20	0DD414809AA	DIODE,SWITCHING	1N4148 26MM	R	
D25	0DD414809AA	DIODE,SWITCHING	1N4148 26MM	R	
D30	0DD414809AA	DIODE,SWITCHING	1N4148 26MM	R	
D31	0DD414809AA	DIODE,SWITCHING	1N4148 26MM	R	
D32	0DD414809AA	DIODE,SWITCHING	1N4148 26MM	R	
D34	0DD414809AA	DIODE,SWITCHING	1N4148 26MM	R	
D35	0DD414809AA	DIODE,SWITCHING	1N4148 26MM	R	
D36	0DD414809AA	DIODE,SWITCHING	1N4148 26MM	R	
D37	0DD414809AA	DIODE,SWITCHING	1N4148 26MM	R	
D90	0DD414809AA	DIODE,SWITCHING	1N4148 26MM	R	
D91	0DD414809AA	DIODE,SWITCHING	1N4148 26MM	R	
D92	0DD414809AA	DIODE,SWITCHING	1N4148 26MM	R	
D93	0DD414809AA	DIODE,SWITCHING	1N4148 26MM	R	
D94	0DD414809AA	DIODE,SWITCHING	1N4148 26MM	R	
D95	0DD414809AA	DIODE,SWITCHING	1N4148 26MM	R	
D96	0DD414809AA	DIODE,SWITCHING	1N4148 26MM	R	
DP1	6302W5A002A	DIGITRON	SVM-07SS15, 7-MT-213GN	R	
PT1	6010W2P043A	TRANSFORMER,POWER	120V/60HZ,144MA/12V	R	
Q01	0TR101509AB	TRANSISTOR	A1015=KTA12660 KEC O TO-92 TP	R	
Q02	0TR101509AB	TRANSISTOR	A1015=KTA12660 KEC O TO-92 TP	R	
Q30	0TR320209BA	TRANSISTOR	KTC3202-O TP KEC TO92 MWO	R	
Q31	0TR101509AB	TRANSISTOR	A1015=KTA12660 KEC O TO-92 TP	R	
Q32	0TR101509AB	TRANSISTOR	A1015=KTA12660 KEC O TO-92 TP	R	
Q34	0TR181509AB	TRANSISTOR	KTC1815-Y=KTC3198YTO-92 TP KEC	R	
Q35	0TR181509AB	TRANSISTOR	KTC1815-Y=KTC3198YTO-92 TP KEC	R	
R01	0RD1501F608	RESISTOR,FIXED CARBON FILM	1.5K 1/6W 5 TA26	R	
R02	0RD1001F608	RESISTOR,FIXED CARBON FILM	1.0K 1/6W 5 TA26	R	

R: SERVICE PARTS
* : ALTERNATE PARTS
N: NOT SERVICE PARTS

(See Illustration “PRINTED CIRCUIT BOARD”)

LOC. NO.	PART NO.	DESCRIPTION	SPECIFICATION	SVC	ALTER
R03	0RD4701F608	RESISTOR,FIXED CARBON FILM	4.7K 1/6W 5 TA26	R	
R04	0RD1001F608	RESISTOR,FIXED CARBON FILM	1.0K 1/6W 5 TA26	R	
R10	0RD1000F608	RESISTOR,FIXED CARBON FILM	100 1/6W 5 TA26	R	
R100	0RD2202F608	RESISTOR,FIXED CARBON FILM	22K 1/6W 5 TA26	R	
R101	0RD4702G608	RESISTOR,FIXED CARBON FILM	47K 1/4W 5 TA26	R	
R103	0RD4702F608	RESISTOR,FIXED CARBON FILM	47K 1/6W 5 TA26	R	
R105	0RD4702F608	RESISTOR,FIXED CARBON FILM	47K 1/6W 5 TA26	R	
R11	0RD0102F608	RESISTOR,FIXED CARBON FILM	10 1/6W 5 TA26	R	
R12	0RD0102F608	RESISTOR,FIXED CARBON FILM	10 1/6W 5 TA26	R	
R13	0RD1003F608	RESISTOR,FIXED CARBON FILM	100K 1/6W 5 TA26	R	
R20	0RD1001F608	RESISTOR,FIXED CARBON FILM	1.0K 1/6W 5 TA26	R	
R21	0RD2202F608	RESISTOR,FIXED CARBON FILM	22K 1/6W 5 TA26	R	
R22	0RD1001F608	RESISTOR,FIXED CARBON FILM	1.0K 1/6W 5 TA26	R	
R25	0RD4701G608	RESISTOR,FIXED CARBON FILM	4.7K 1/4W 5 TA26	R	
R26	0RD1001G608	RESISTOR,FIXED CARBON FILM	1K OHM 1/4 W 5% TA26	R	
R30	0RD1002F608	RESISTOR,FIXED CARBON FILM	10K 1/6W 5 TA26	R	
R31	0RD2701F608	RESISTOR,FIXED CARBON FILM	2.7K 1/6W 5 TA26	R	
R32	0RD1002F608	RESISTOR,FIXED CARBON FILM	10K 1/6W 5 TA26	R	
R33	0RD5601G608	RESISTOR,FIXED CARBON FILM	5.6K 1/4W 5 TA26	R	
R34	0RD1002F608	RESISTOR,FIXED CARBON FILM	10K 1/6W 5 TA26	R	
R35	0RD5601G608	RESISTOR,FIXED CARBON FILM	5.6K 1/4W 5 TA26	R	
R38	0RD1002F608	RESISTOR,FIXED CARBON FILM	10K 1/6W 5 TA26	R	
R39	0RD5601F608	RESISTOR,FIXED CARBON FILM	5.6K 1/6W 5 TA26	R	
R40	0RD1002F608	RESISTOR,FIXED CARBON FILM	10K 1/6W 5 TA26	R	
R41	0RD5601F608	RESISTOR,FIXED CARBON FILM	5.6K 1/6W 5 TA26	R	
R50	0RD1001G608	RESISTOR,FIXED CARBON FILM	1K OHM 1/4 W 5% TA26	R	
R51	0RD1000F608	RESISTOR,FIXED CARBON FILM	100 1/6W 5 TA26	R	
R55	0RD1004F608	RESISTOR,FIXED CARBON FILM	1.0M 1/6W 5 TA26	R	
R80	0RD2202F608	RESISTOR,FIXED CARBON FILM	22K 1/6W 5 TA26	R	
R81	0RD2202F608	RESISTOR,FIXED CARBON FILM	22K 1/6W 5 TA26	R	
R82	0RD2202F608	RESISTOR,FIXED CARBON FILM	22K 1/6W 5 TA26	R	
R83	0RD2202F608	RESISTOR,FIXED CARBON FILM	22K 1/6W 5 TA26	R	
R84	0RD2202F608	RESISTOR,FIXED CARBON FILM	22K 1/6W 5 TA26	R	
R90	0RD2202F608	RESISTOR,FIXED CARBON FILM	22K 1/6W 5 TA26	R	
R91	0RD2202F608	RESISTOR,FIXED CARBON FILM	22K 1/6W 5 TA26	R	
R92	0RD2202F608	RESISTOR,FIXED CARBON FILM	22K 1/6W 5 TA26	R	
R93	0RD2202G608	RESISTOR,FIXED CARBON FILM	22K 1/4W 5 TA26	R	
R94	0RD2202F608	RESISTOR,FIXED CARBON FILM	22K 1/6W 5 TA26	R	
R95	0RD2202F608	RESISTOR,FIXED CARBON FILM	22K 1/6W 5 TA26	R	
R96	0RD2202F608	RESISTOR,FIXED CARBON FILM	22K 1/6W 5 TA26	R	
RY1	6920W5A008A	RELAY	DQ1U DAIICHI DC12V DC16.7MA DC	R	6920W2D010B
RY1	6920W5A008A	RELAY	DQ1U DAIICHI DC12V DC16.7MA DC	R	6920W5A007A
RY1	6920W5A008A	RELAY	DQ1U DAIICHI DC12V DC16.7MA DC	R	6920W2D010A
RY11	6920W5A008A	RELAY	DQ1U DAIICHI DC12V DC16.7MA DC	R	6920W2D010B
RY11	6920W5A008A	RELAY	DQ1U DAIICHI DC12V DC16.7MA DC	R	6920W2D010A
RY11	6920W5A008A	RELAY	DQ1U DAIICHI DC12V DC16.7MA DC	R	6920W5A007A
RY14	6920W5A008A	RELAY	DQ1U DAIICHI DC12V DC16.7MA DC	R	6920W2D010B
RY14	6920W5A008A	RELAY	DQ1U DAIICHI DC12V DC16.7MA DC	R	6920W5A007A
RY14	6920W5A008A	RELAY	DQ1U DAIICHI DC12V DC16.7MA DC	R	6920W2D010A
RY2	6920W2YD04A	RELAY	OZF-S-112LM1P,DC12V,SPST,OEG	R	
RY5	6920W2YD05A	RELAY	YR-PL2-12/CS-1PD,DC12V YOUNG R	R	
U01	0IZZW5A012D	IC	HD404339B37S	R	
ZD1	0DZ510009AA	DIODE,ZENER	5.1V 1/2W TP	R	
ZD2	0DZ750009BB	DIODE,ZENER	UZ-7.5BS 0.5W TP	R	

R: SERVICE PARTS
* : ALTERNATE PARTS
N: NOT SERVICE PARTS

Dometic®

Feb, 2000
P/NO : 3828W5S1411
Printed in Korea