DOMETIC

AWNINGS
POWER AWNING

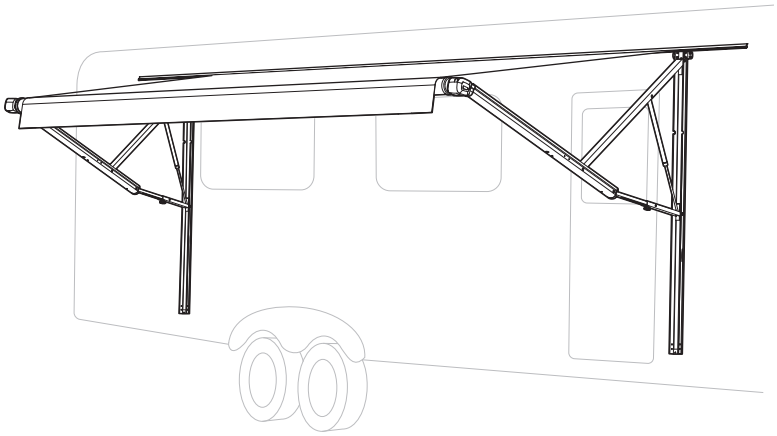

9200

EN

9200 Series Power Awning
Installation Instructions 3

REVISION D Form No. 3316600.000 2023-07-24

Copyright

© 2023 Dometic Group. The visual appearance of the contents of this manual is protected by copyright and design law. The underlying technical design and the products contained herein may be protected by design, patent or be patent pending. The trademarks mentioned in this manual belong to Dometic Sweden AB. All rights are reserved.

Service center & dealer locations
Visit: www.dometic.com

Please read these instructions carefully and follow all instructions, guidelines, and warnings included in this product manual in order to ensure that you install, use, and maintain the product properly at all times. These instructions MUST stay with this product.

By using the product, you hereby confirm that you have read all instructions, guidelines, and warnings carefully and that you understand and agree to abide by the terms and conditions as set forth herein. You agree to use this product only for the intended purpose and application and in accordance with the instructions, guidelines, and warnings as set forth in this product manual as well as in accordance with all applicable laws and regulations. A failure to read and follow the instructions and warnings set forth herein may result in an injury to yourself and others, damage to your product, or damage to other property in the vicinity. This product manual, including the instructions, guidelines, and warnings, and related documentation, may be subject to changes and updates. For up-to-date product information, please visit www.dometic.com.

Contents

1 Explanation of Symbols and Safety Instructions 3
1.1 Recognize Safety Information 3
1.2 Understand Signal Words 3
1.3 Supplemental Directives 4
1.4 General Safety Messages 4
2 General Information 5
3 Intended Use 5
4 Specifications 6
5 Pre-Installation 6
5.1 Preparing the Awning Rail 6
5.2 Preparing the Awning Assembly 7
5.3 Determining the Awning Location 7
6 Installing the Electrical Wiring 9
6.1 Installing the Fixed/Wired Awning Switch . . . 9
6.2 Installing the Ignition/Safety Interlock System 9
6.3 Installing the LED Light Switch 9
7 Installing the Awning 10
7.1 Inserting Fabric into the Awning Rail 10
7.2 Attaching the Top Mounting Brackets 11
7.3 Attaching the Back Channels 12
7.4 Making the Electrical Connections 14
7.5 Installing Additional Back Channel Support . 16
7.6 Completing the Back Channel Installation . . 16
7.7 Securing the Awning to the Rail 17
7.8 Installing the End Covers 17
8 Post-Installation 17
9 Disposal 17
Limited One-Year Warranty 17

Related Documents

Find the installation manual in French online at
http://qr.dometic.com/be6MX1

1 Explanation of Symbols and Safety Instructions

This manual has safety information and instructions to help you eliminate or reduce the risk of accidents and injuries.

1.1 Recognize Safety Information

This is the safety alert symbol. It is used to alert you to potential physical injury hazards. Obey all safety messages that follow this symbol to avoid possible injury or death.

1.2 Understand Signal Words

A signal word will identify safety messages and property damage messages, and also will indicate the degree or level of hazard seriousness.

DANGER!
Indicates a hazardous situation that, if **not** avoided, will result in death or serious injury.

WARNING
Indicates a hazardous situation that, if **not** avoided, could result in death or serious injury.

CAUTION
Indicates a hazardous situation that, if **not** avoided, could result in minor or moderate injury.

NOTICE: Used to address practices **not** related to physical injury.

Indicates additional information that is **not** related to physical injury.

1.3 Supplemental Directives

To reduce the risk of accidents and injuries, please observe the following directives before proceeding to install this appliance:

- Read and follow all safety information and instructions.
- Read and understand these instructions before installing this product.
- The installation **must** comply with all applicable local or national codes, including the latest edition of the following standards:

  U.S.A.

  – ANSI/NFPA70, National Electrical Code (NEC)
  – ANSI/NFPA 1192, Recreational Vehicles Code
  – ANSI Z21.57, Recreational Vehicles Code

  Canada

  – CSA C22.1, Parts I & II, Canadian Electrical Code
  – CSA Z240 RV Series, Recreational Vehicles

FCC STATEMENT For RGB Lighted Awnings with Remote Control

1. This device complies with the Code of Federal Regulations, Title 47, Part 15, Radio Frequency Devices. Operation is subject to the following two conditions:

   (1) This device may not cause harmful interference.

   (2) This device must accept any interference received, including interference that may cause undesired operation.

2. Changes or modifications not expressly approved by the party responsible for compliance could void the user's authority to operate the equipment.

   NOTE: This equipment has been tested and found to comply with the limits for a Class B digital device, pursuant to Part 15 of the FCC Rules. These limits are designed to provide reasonable protection against harmful interference in a residential installation.

   This equipment generates, uses, and can radiate radio frequency energy and, if not installed and used in accordance with the instructions, may cause harmful interference to radio communications.

   However, there is no guarantee that interference will not occur in a particular installation. If this equipment does cause harmful interference to radio or television reception, which can be determined by turning the equipment off and on, the user is encouraged to try to correct the interference by one or more of the following measures:

   – Reorient or relocate the receiving antenna.
   – Increase the separation between the equipment and receiver.
   – Connect the equipment into an outlet on a circuit different from that to which the receiver is connected.
   – Consult the dealer or an experienced radio/TV technician for help.

1.4 General Safety Messages

WARNING: ELECTRICAL SHOCK OR FIRE HAZARD. Failure to obey the following warnings could result in death or serious injury:

- This product **must** be installed and serviced by a qualified service technician.
- Make sure there are no obstacles inside the RV walls. Shut off the gas supply, disconnect 120 VAC power from the RV, and disconnect the positive (+) 12 VDC terminal from the supply battery before drilling or cutting into the RV.

WARNING: IMPACT OR CRUSH HAZARD. Failure to obey the following warnings could result in death or serious injury:

- Do **not** install the awning during windy conditions, or when wind is expected. Otherwise, the awning could move unpredictably, become unstable, and could detach, bend, or collapse. This awning should be installed in a controlled environment (inside).
- Do **not** allow water to pool or snow to accumulate on the awning fabric. The awning will become unstable, and could bend or collapse. Whenever heavy rain or snow is expected, place the awning in the stowed (closed) position.

WARNING: IMPACT OR PINCH HAZARD.
Do **not** remove the straps (wrapped around each arm assembly) until the Fabric Roller Tube Assembly (FRTA) is secured to the front channel, the awning fabric is attached to the awning rail, and the arm assembly is mounted to the RV. Arm assemblies are under tension from the gas struts. Removing these ties could allow the arms to extend quickly and unexpectedly. Failure to obey this warning could result in death or serious injury.

NOTICE: Whenever heavy or prolonged rain or wind is expected, or the awning is left unattended, it is important to place the awning in the stowed (closed) position. Damage as a result of weather is not covered by the warranty.

NOTICE: Do **not** constrain or tie down the roller tube, as this could disable the water shed feature—a feature that automatically lowers one side of the awning during light rain to allow water run off.

2 General Information

This section describes the included and optional parts necessary to complete the installation process.

The images used in this document are for reference purposes only. Components and component locations may vary according to specific product models. Measurements may vary ±0.38 in. (1.0 cm).

Included Parts	Quantity
15 Amp Circuit Breaker	1
#14-10 x 1-1/2 in. Hex Head Screw	8
#6-20 x 7/16 in. Self-Drilling Hex Head Washer Screw	2
Slic Pin	1
Hardware End Cover Kit[1] (3317080.000#)	1

[1] The hardware end cover kit part number is appended with "B" for white, or "U" for black.

Optional Parts[1]	Reference Number
Door Roller Kit	930004
Back Channel Spacer Kit	3312853.025 (#)
RGB LED Controller	3316969.017
RGB LED RF Wireless Remote	3316969.025
Control Switch Accessory	3310455.062

[1] Available as an accessory (not included).

Required Tools and Materials
Drill
3/16 in. Drill Bit
5/8 in. Drill Bit
7/32 in. Drill Bit (For Steel Mounting)
3/8 in. Hex Nut Driver (For Drill)
7/16 in. Hex Nut Driver (For Drill)
Sealant

3 Intended Use

This 9200 Series Power Awning (hereinafter referred to as "Awning") is designed and intended for installation on a Recreational Vehicle (hereinafter referred to as "RV") during or after the RV manufacture. Use these instructions to ensure correct installation and function of the product.

The Product kit is available for order with various components, so while some graphics may show different components, they still illustrate the correct procedure. All components that were not originally ordered can be purchased as an add-on or upgrade.

The manufacturer accepts no liability for damage in the following cases:

- Faulty assembly or connection
- Damage to the product resulting from mechanical influences and excess voltage
- Alterations to the product without express permission from the manufacturer
- Use for purposes other than those described in the operating manual

Dometic Corporation reserves the right to modify appearances and specifications without notice.

4 Specifications

This section describes the hardware dimensions for 8962XX1.4X0#(L), 8962XX2.4X0#(L), and 8962XX3.4X0#(L) model back channels.

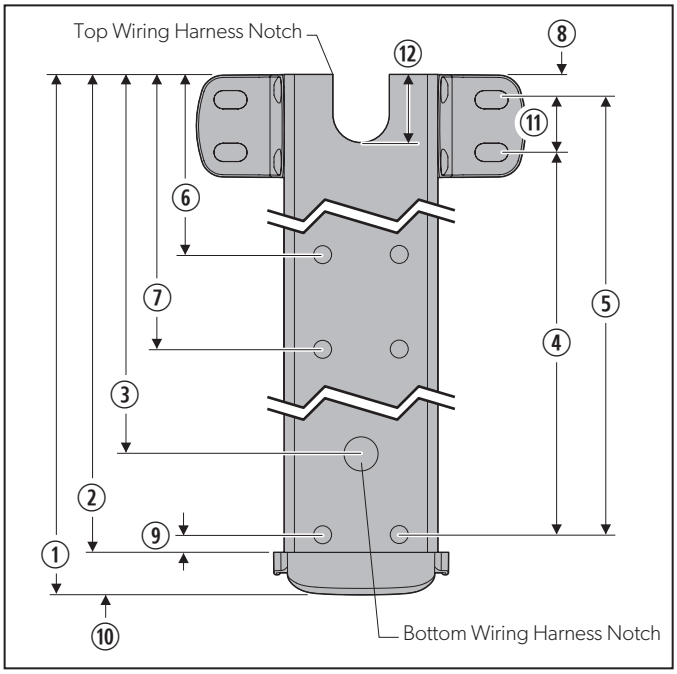

1 Hardware Dimensions (back channel)

Wiring harness location may be at the top or bottom, depending on the awning model.

8962XX1.4X0#(L)

① 62-3/4 in. (159.4 cm)
② 62 1/8 in. (157.8 cm)
③ 60 1/8 in. (152.7 cm)
④ 60-3/4 in. (154.3 cm)
⑤ 61 1/2 in. (156.2 cm)

8962XX2.4X0#(L)

① 66-1/4 in. (168.3 cm)
② 65-5/8 in. (166.68 cm)
③ 63-5/8 in. (161.6 cm)
④ 64-1/4 in. (163.2 cm)
⑤ 65 in. (165.1 cm)
⑥ 33 in. (83.8 cm)
⑦ 39 in. (99.1 cm)
⑧ 3/8 in. (1.0 cm)
⑨ 1/4 in. (0.6 cm)
⑩ 5/8 in. (1.6 cm)
⑪ 3/4 in. (1.9 cm)
⑫ 1-1/2 in. (3.8 cm)

8962XX3.4X0#(L)

① 66-1/4 in. (168.3 cm)
② 65-5/8 in. (166.7 cm)
③ 63-5/8 in. (161.6 cm)
④ 64-1/4 in. (163.2 cm)
⑤ 65 in. (165.1 cm)

5 Pre-Installation

This section provides instructions to complete before the installation.

5.1 Preparing the Awning Rail

NOTICE: Ensure the awning rail is parallel to the RV floor, and is **not** warped or curved, before installing the awning fabric. If the awning rail is **not** straight, the awning fabric may wrinkle or stretch.

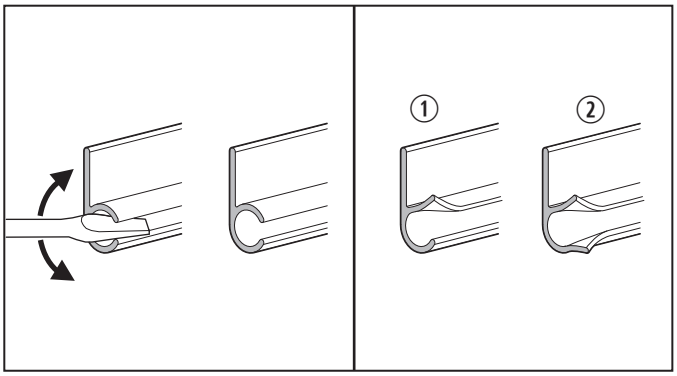

2 Flaring the Rail End

① LED Awning (Top Only)
② Typical Awning (Top and Bottom)

Complete the following steps to prepare the awning rail.

1. Select a rail end (on the RV) to insert the awning fabric.
2. Flare (widen) this rail end with a flat-bladed screwdriver, and remove (file) burrs or sharp edges.

If the awning is equipped with an LED lighting strip, flare only the top of the awning rail end. The LED rail attached to the fabric will slide into the flared awning rail. If the awning is not equipped with an LED lighting strip, flare the top and bottom of the awning rail end.

5.2 Preparing the Awning Assembly

The motor is already installed on the right hand (RH) arm assembly. The motor and the Slic pin cannot be removed once they are installed.

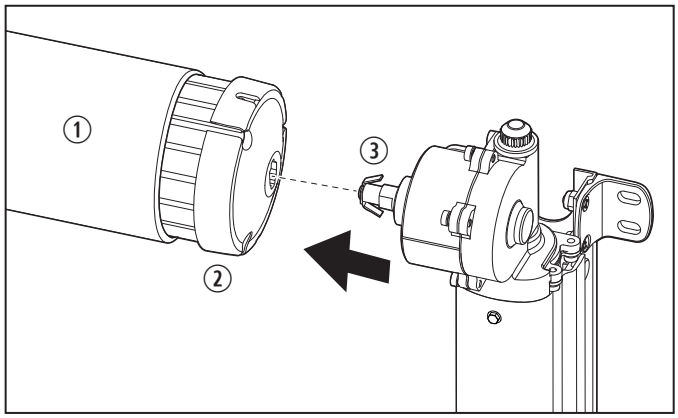

3 RH Arm Assembly

① FRTA
② RH End Cap
③ Motor Drive Shaft

Complete the following steps to prepare the awning assembly.

1. Place the FRTA on a protected surface while preparing it for installation.
2. Connect the FRTA RH end cap to the motor drive shaft on the RH arm assembly.
3. After the awning assembly is installed, attempt to pull the motor away from the FRTA to verify that it is engaged.

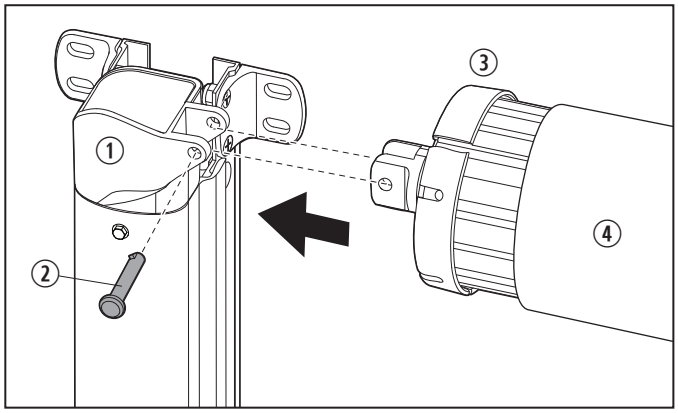

4 LH Arm Assembly

① Top Casting
② Slic Pin
③ LH End Cap
④ FRTA

4. Align the FRTA left hand (LH) end cap to the top casting on the LH arm assembly.
5. Using the Silc pin, permanently connect the FRTA LH end cap to the top casting.

5.3 Determining the Awning Location

WARNING: IMPACT OR CRUSH HAZARD.
Make sure the mounting surface on the RV is flat, has a solid structural backing where fasteners penetrate the surface, and will safely and securely support the awning. Otherwise, the awning may become unstable and could detach. Failure to obey this warning could result in death or serious injury.

Allow for sufficient clearance between the awning fabric and the entry door, or slideout room, to accommodate the awning's pitch (slope). Avoid locations that interfere with entry door swing when the awning is completely extended. See sections "5.3.1 Door Clearance" on page 8 and "5.3.2 Installing an Optional Roller and Edge Guard" on page 8 for more detail.

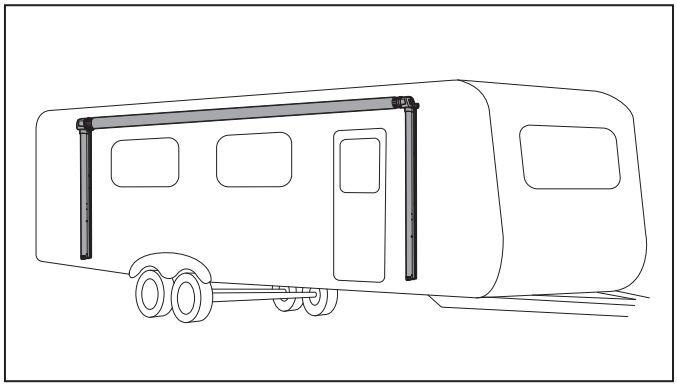

5 Awning Location

Complete the following steps to determine the awning location.

1. Find a solid structure in the RV wall to support the top mounting brackets and back channels (all mounting points).
2. To install the awning components over windows, order the back channel spacer kit P/N 3312853.025(#).

Make sure the arm assemblies do not restrict the use of doors, windows, and similar RV components.

5.3.1 Door Clearance

This section provides clearance measurements for the awning's placement.

When the entry door is toward the center of the awning, add 2 in. (5.08 cm) to minimum distances.

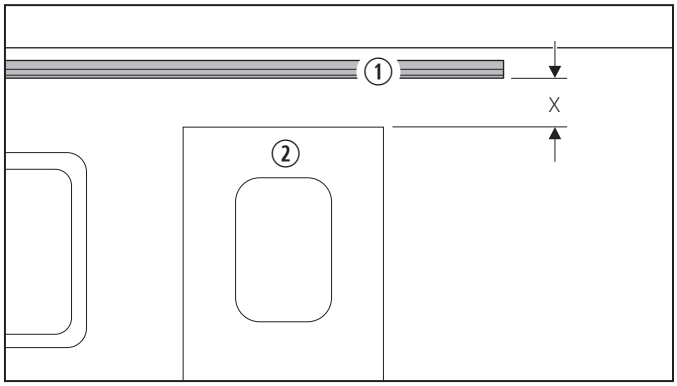

6 Door Clearance Distance

① Awning Rail ② Entry Door

Model	Min. Distance (X)
8962XX1.4X0#(L)	12 in. (30.5 cm)
8962XX2.4X0#(L)	7 in. (17.8 cm)
8962XX3.4X0#(L)	6 in. (15.2 cm)

Doors, windows, lights, trim, and slideout rooms **must** be considered when determining the length and position of the awning to ensure that the awning will not obstruct them or be affected by them.

5.3.2 Installing an Optional Roller and Edge Guard

NOTICE: Do **not** allow the corner of the entry door to contact the awning fabric, or premature wear or tearing of the awning fabric could occur. If there is potential for a squared corner entry door to contact the awning fabric, a door roller kit (not included) **must** be installed.

This section provides instructions for the optional door roller kit to protect the awning.

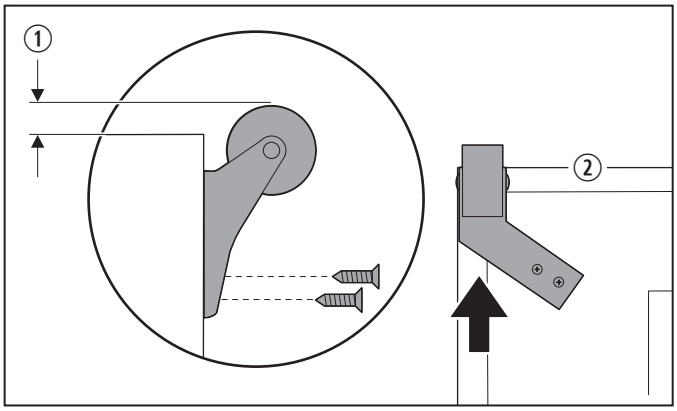

7 Roller Clearance

① 1/4–3/8 in. (0.6–1.0 cm) Above Door ② Outer Entry Door

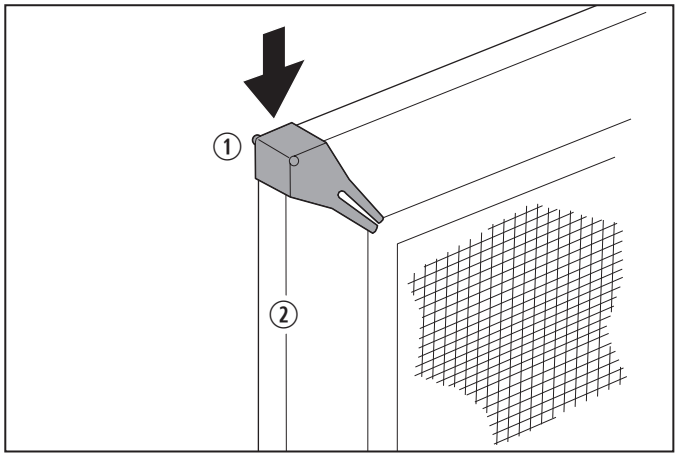

8 Door Edge Guard

① Door Edge Guard ② Inner Screen Door

6 Installing the Electrical Wiring

WARNING: ELECTRICAL SHOCK HAZARD. Failure to obey the following warnings could result in death or serious injury:

- Disconnect all electrical connections from the RV for **all** procedures under this section.
- The awning must be on a 12 VDC 15 Amp protected, dedicated circuit.

This section provides instructions for wiring installation.

6.1 Installing the Fixed/Wired Awning Switch

NOTICE: Do **not** expose the awning switch to adverse weather, extreme temperatures, or long hours in direct sunlight.

Use the control switch accessory 3310455.062 or a (Dometic Corporation approved) electronic control switch with motor overload protection. See the instructions included with your Dometic Corporation control switch accessory kit for additional wiring instructions.

Complete the following steps to install the power awning switch.

1. Find a suitable location for the awning switch installation.
2. Install the 15 Amp circuit breaker (included) at the fuse panel for positive (+) 12 VDC power supply (red wire) to the switch.
3. Route the wiring (inside the RV) to a general location for connection to the awning hardware.
4. Allow enough wiring length to pass through the outside RV wall (the hole will be drilled later) for connection to the awning.

The wiring hole location will be either at the top or the bottom of the RH back channel, depending on the awning model.

5. Make the wiring connections inside the RV.

Wiring connections to the awning (through the outside RV wall) will be made later.

6.2 Installing the Ignition/Safety Interlock System

WARNING: IMPACT OR CRUSH HAZARD. Do **not** install the awning without also installing an ignition/safety interlock system. Otherwise, accidental operation during transit could occur. Failure to obey this warning could result in death or serious injury.

NOTICE: Install a 5A fuse (installer supplied) at the fuse panel for the positive (+) 12 VDC ignition control (PINK wire) to the ignition interlock.

The ignition/safety interlock system is only applicable to motorhomes. The ignition interlock must break the circuit (cut power) to the awning when the ignition is ON.

See the instructions included with your Dometic Corporation ignition interlock kit 3313283.008 for additional wiring instructions.

6.3 Installing the LED Light Switch

Complete this procedure only if the awning is equipped with an LED light strip. An LED light switch (installer supplied) is required for awning models equipped with an LED light strip.

NOTICE: Do **not** expose the switch to adverse weather, extreme temperatures, or long hours in direct sunlight.

NOTICE: Install a (5A) fuse or a (5A) in-line fuse (installer supplied) at the fuse panel for positive (+) 12 VDC power supply (red wire) to the LED switch.

Complete the following steps to install the LED light switch.

1. Find a suitable location for the LED switch installation.
2. Route the wiring (inside the RV) to a general location where the awning hardware connections will be made.
3. Allow enough wiring length to pass through the outside RV wall (the hole will be drilled later) for connection to the awning.

The wiring hole location will be either at the top or the bottom of the RH back channel, depending on the awning model.

4. Make the wiring connections inside the RV.

See instructions included with your LED light switch for specific wiring instructions. Wiring connections to the awning (through the outside RV wall) will be made later.

7 Installing the Awning

This section provides instructions for the awning installation.

7.1 Inserting Fabric into the Awning Rail

WARNING: IMPACT OR CRUSH HAZARD.
Do **not** remove the LED rail (if equipped) from the LED light strip awning fabric. Otherwise, the awning fabric could separate from the awning rail (on the RV) and cause the awning to extend quickly, resulting in detaching, bending, or collapsing. Failure to obey this warning could result in death or serious injury.

CAUTION: LIFTING HAZARD.
Use proper lifting technique and control when lifting the awning. Failure to obey this caution could result in minor or moderate injury.

NOTICE: Keep both arm assemblies parallel to each other to avoid twisting and damaging the awning.

You will need at least two other people to hold and control the hardware until the top mounting brackets and back channels are correctly installed. You may also need a stepladder.

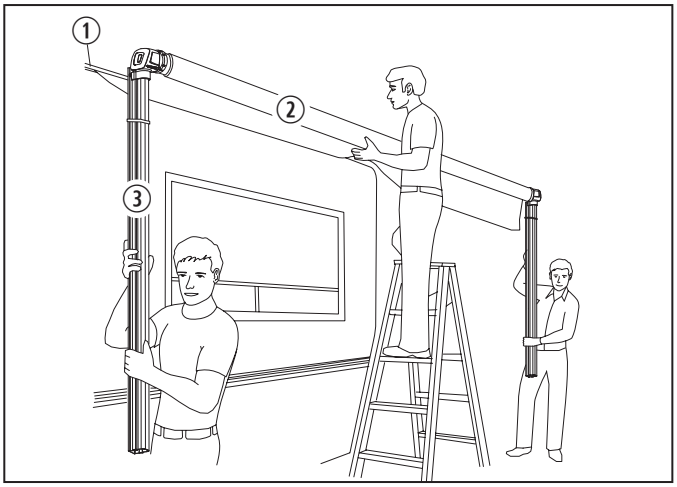

9 Lifting the Awning

① Awning Rail ③ Hardware Arm Assembly
② FRTA

If the awning has an undesired LED light strip, either remove the LED light strip from the LED rail while leaving the empty LED rail on the fabric rope, or replace the LED light strip awning fabric with a standard awning fabric.

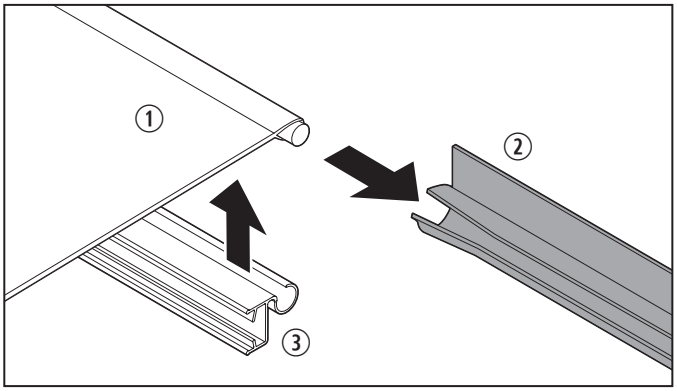

11 Sliding the Awning Fabric into the Awning Rail

① Awning Fabric ③ LED Rail (LED awnings)
② Awning Rail

Complete the following steps to install the awning fabric onto the awning rail.

1. Unfurl the awning fabric one revolution before inserting the fabric (with the awning roller cover, if equipped) into the awning rail.

Unfurling one revolution will allow enough space between the RV wall and the awning hardware to guide the awning fabric into the awning rail.

2. With one person grasping each arm assembly, carefully lift the entire awning assembly upright. Carry the awning toward the flared awning rail end.
3. While one person guides the awning fabric (with awning roller cover, if equipped) into the awning rail, carefully move (carry) the awning hardware assembly to the desired location.
4. Slide the awning fabric into the awning rail while carrying the awning toward the other (non-flared) end.

7.2 Attaching the Top Mounting Brackets

This section provides instructions for the bracket installation.

WARNING: IMPACT OR PINCH HAZARD. The arm assemblies are under tension from gas struts. Hold the arm assemblies and FRTA securely before removing the ties. Otherwise, the arms will extend quickly and unexpectedly. Failure to obey this warning could result in death or serious injury.

NOTICE: Control both arm assemblies while installing the brackets. When the weight of the FRTA is **not** supported, downward force could cause the arm assemblies to swing sideways and damage the RV.

The motorized arm assembly is always installed at the RH side of the awning.

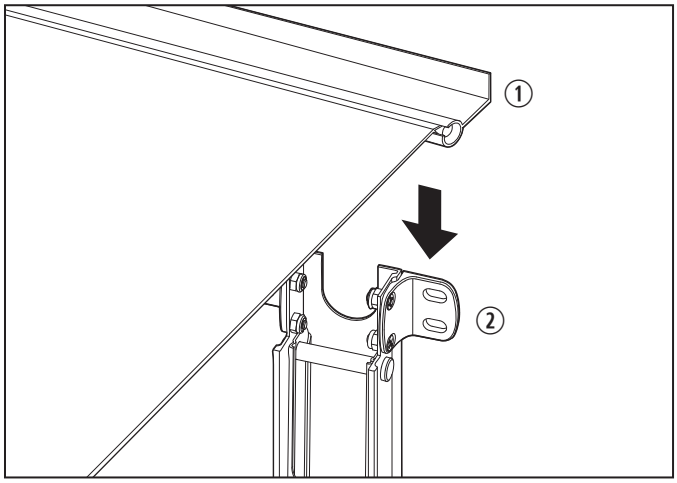

12 Positioning the Awning Rail

① Wide Awning Rail ② Top Mounting Bracket

Some awning rails have a wide drip channel to catch water as it runs off the RV roof. It may be necessary to lower the position of the top mounting brackets to avoid interference.

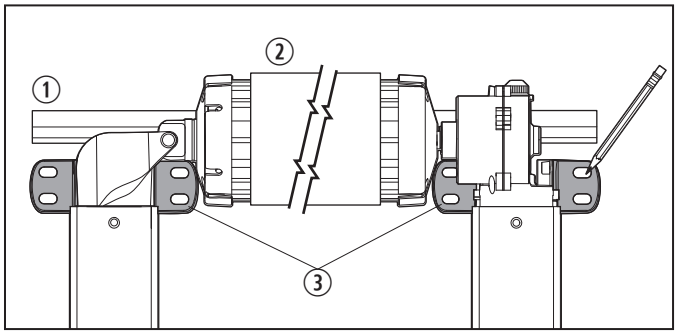

13 Marking the Mounting Hole Locations

① Awning Rail ③ Top Mounting Brackets
② FRTA

Complete the following steps to install the brackets.

1. While holding the arm assemblies securely in place and perpendicular to the awning rail, mark the top set of the mounting hole locations.

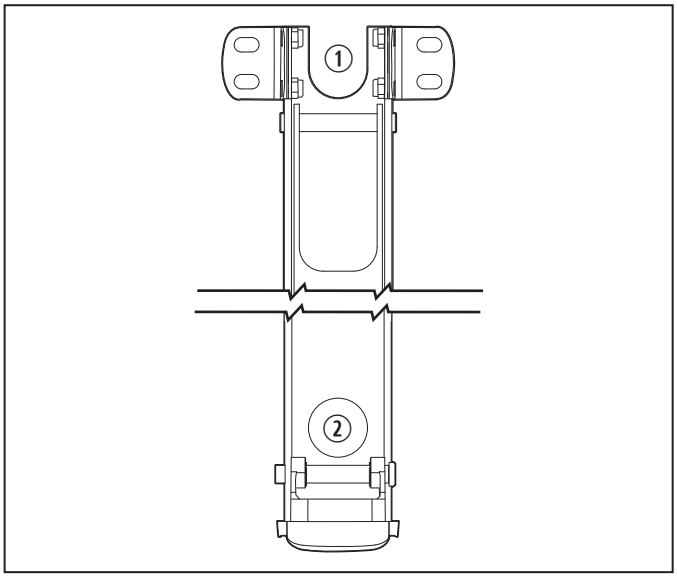

14 Wiring Harness Hole Location

① Top Notch (Channel) ② Bottom Hole (Channel)

2. Drill 3/16 in. (4.8 mm) diameter holes through the marked mounting hole locations and into the solid structure of the RV. If drilling through steel, drill 7/32 in. (5.6 mm) diameter holes.

The wiring harness hole location is determined by the awning model. The back channel will either have a notch at the top, or a hole near the bottom for wiring to pass through the RV wall.

Skip this step if the wiring hole location is at the bottom of the RH bracket. If the wiring hole location is at the top of the RH bracket, mark the location and drill a 5/8 in. (15.8 mm) diameter hole.

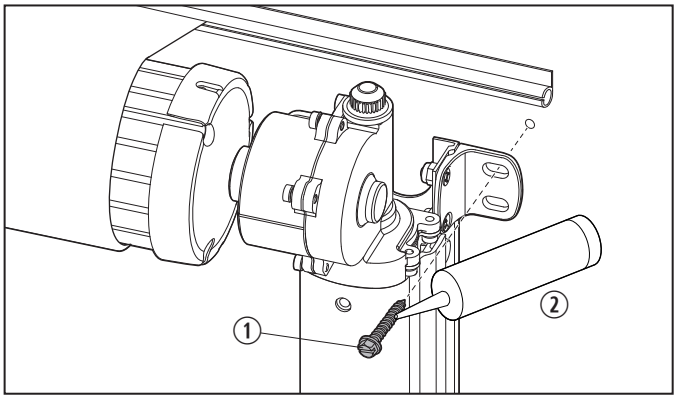

15 Securing the Top Mounting Brackets

① #14-10 x 1-1/2 in. Hex Head Screw ② Sealant

NOTICE: Always use sealant on clean parts and surfaces where fasteners enter the RV walls. Otherwise, water leakage could occur.

3. Apply sealant to the threads on two #14-10 x 1-1/2 in. screws.
4. Place and tighten one screw through the upper outside slot of the RH top mounting bracket and into the solid structure of the RV.
5. Repeat Step 4 for the LH upper outside slot.

Ensure the arm assemblies are completely closed before tightening the outside screws. Closed arm assemblies will help in the overall alignment.

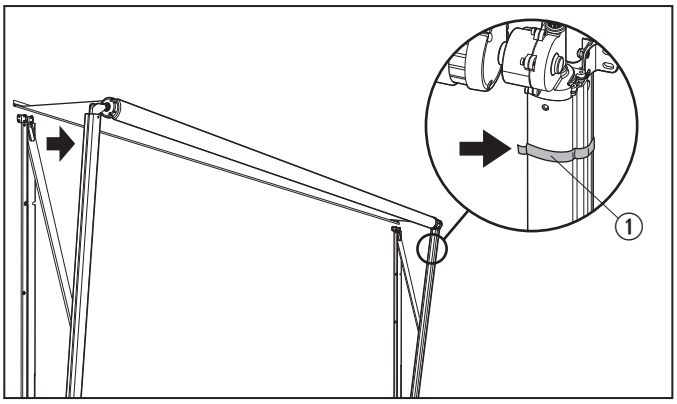

16 Unfurling the Awning

① Strap

6. Remove the straps from the hardware arms and slowly unfurl the awning 12–18 in. (30.48–45.72 cm).
7. Apply sealant to the threads on two #14-10 x 1-1/2 in. screws.
8. Place and tighten one screw through the inside upper slot of the RH top mounting bracket and into the solid structure of the RV.
9. Repeat Step 8 for the LH upper inside slot.

7.3 Attaching the Back Channels

This section provides instructions for the back channel installation.

NOTICE: Install the back channels on a flat, level surface, and keep the back channels parallel with each other to ensure correct function and appearance.

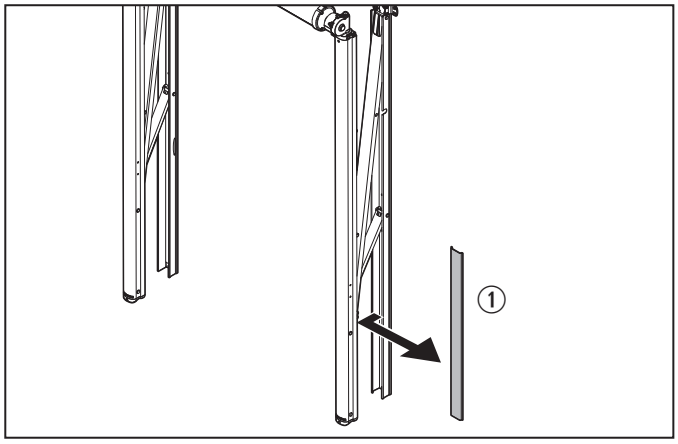

17 Removing the Wiring Cover

① Wiring Cover

Complete the following steps to install the back channels.

1. If using the bottom exit wire, remove the wiring cover from the RH back channel and set aside for later.

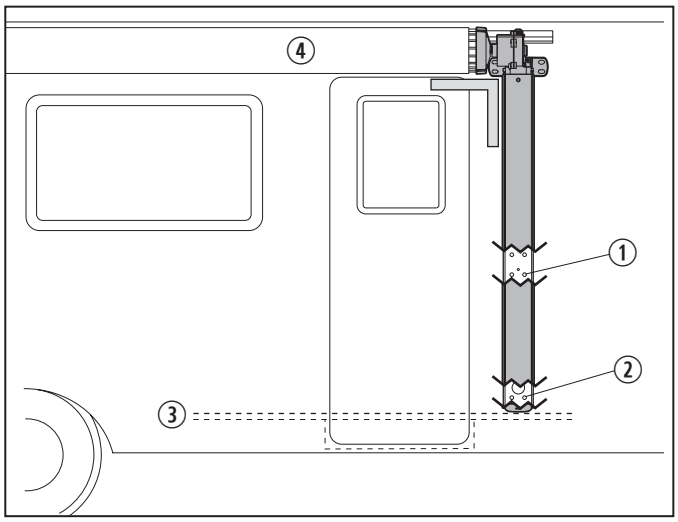

18 Aligning the Back Channel to the RV

① Center Mounting Holes
② Bottom Mounting Holes
③ Floor Lines
④ FRTA

2. Square the RH back channel to the RV and the FRTA, and mark the mounting hole locations.
3. Repeat Steps 1–2 for the LH side.

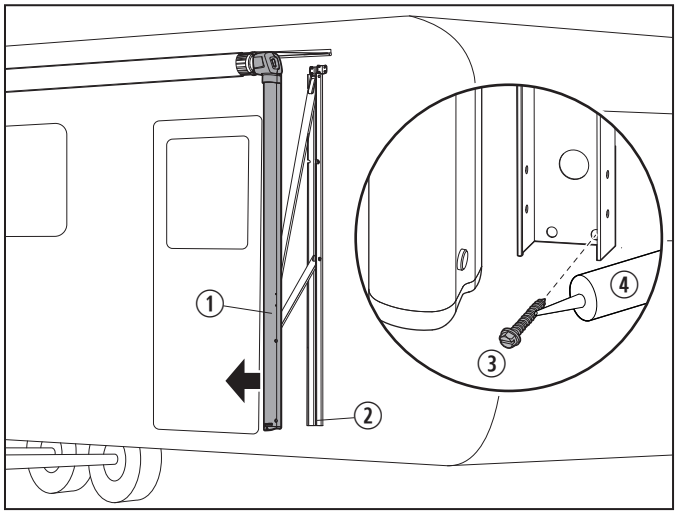

19 Mounting the RH Arm Assembly

① RH Arm Assembly
② Mounting Locations
③ Sealant
④ #14-10 x 1-1/2 in. Screw

4. Drill 3/16 in. (4.8 mm) diameter holes through the marked mounting hole locations and into the solid structure of the RV. If drilling through steel, drill 7/32 in. (5.6 mm) diameter holes.

Skip this step if you are attaching the LH back channel, or if the wiring will pass through the RV wall at the top of the RH back channel. Drill a 5/8 in. (15.8 mm) diameter hole at the marked bottom wiring hole location and through the outside wall of the RV.

5. Apply sealant to the #14-10 x 1-1/2 in. screws (installer supplied). Oscar Rivets are an acceptable alternative.
6. Place and tighten screws through the bottom mounting holes of the back channel and into the solid mounting structure of the RV.

Structural backing (with skin) **must** be 3/8–1/2 in. (9.5–12.7 mm) thick to accommodate the Oscar Rivets. Use structural screws to secure the back channel if the RV has structural backing that supports at least 100 lb (45.35 kg) force per screw.

7. Repeat Steps 4–6 for the LH arm assembly.

7.4 Making the Electrical Connections

NOTICE: Make sure the positive (+) 12 VDC terminal is disconnected from the supply battery.

NOTICE: Always seal wiring against weather and moisture.

NOTICE: Do **not** pinch wiring or allow wiring to rub against sharp edges. If wiring is damaged, it **must** be replaced by a qualified service technician.

This section provides instructions to complete the initial wiring connections.

7.4.1 Motor and Operation Switch Connections

Use a grommet or heat-shrink tubing where ever wiring passes through the RV wall. If a grommet is **not** used, make sure the sealant will also provide effective and permanent protection against wire damage.

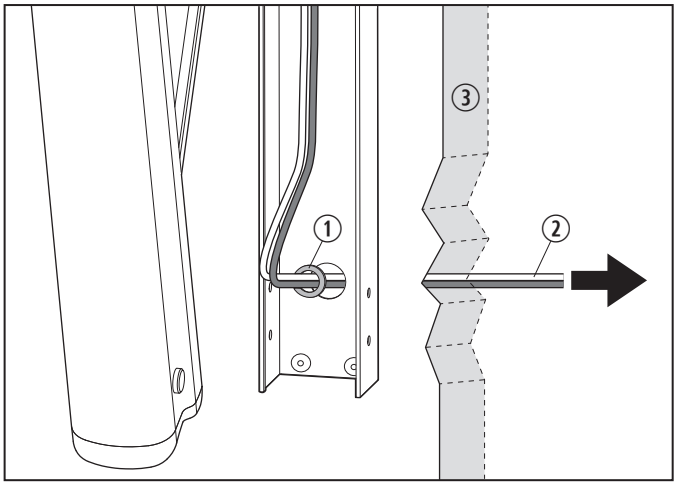

20 Installing the Wiring into the RV

① Grommet ③ RV Wall
② Wiring

Complete the following steps to connect the power awning motor wiring.

1. Plug the motor wire into the motor wire harness at the top of the front arm.
2. Pull the motor wiring through the wiring hole and grommet, and connect to the appropriate wiring inside the RV.
3. Make the electrical connections inside the RV.
4. Secure any slack motor/hardware wiring inside the front channel to prevent pinched or damaged wiring during awning operation.

See the instructions included with your Dometic Corporation switch kit for additional wiring instructions.

7.4.2 White or Blue LED Light Connections

Complete this procedure only if the awning is equipped with a white or blue LED light strip.

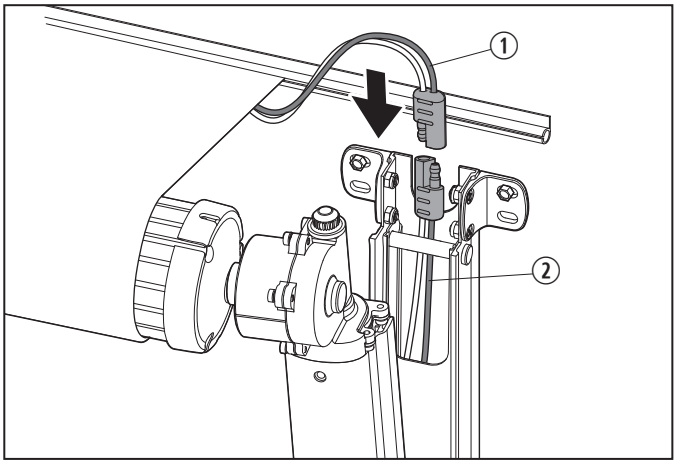

21 Making the LED Blue or White Light Connections

① LED Light Strip Wiring ② LED Switch Wiring

1. Connect the LED switch wiring to the factory-wired LED light strip.
2. Secure the wiring to prevent pinching or other damage during awning operation. Allow enough slack in the wiring to safely accommodate possible fabric movement.

See instructions included with your LED switch kit (installer supplied) for additional wiring instructions.

7.4.3 RGB LED Light Connections

Complete this procedure only if the awning is equipped with an RGB LED light strip.

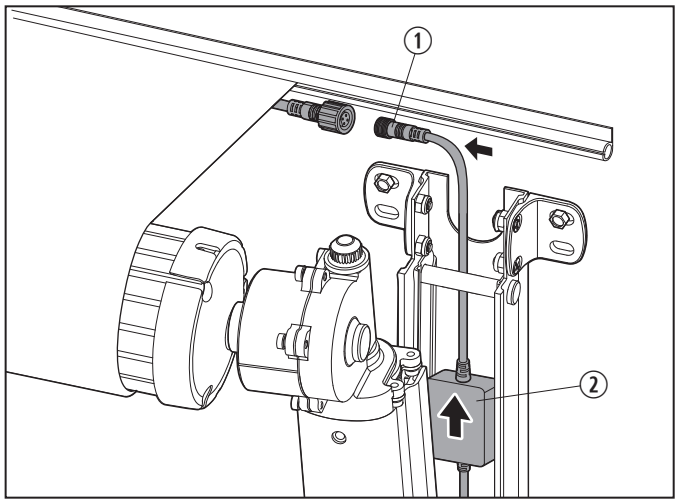

22 Making the RGB Light Connections

① LED Light Strip Connector ② LED Controller Box

1. Feed the LED controller box's 4-pin end behind the awning pivot pin and connect to the LED strip connector.

The ends are keyed to join in a specific orientation. Do not force together if misaligned.

2. Thread the connector nut onto the 4-pin end and tighten until snug (do not over-tighten).
3. Before mounting the LED controller box, move the red and black power wiring aside and away from inside the back channel.

The LED controller box cannot be moved once positioned with adhesive.

4. Peel away the film on the back of the LED controller box to expose the adhesive backing.
5. Position and press into the back channel, allowing enough slack to accommodate possible fabric movement.

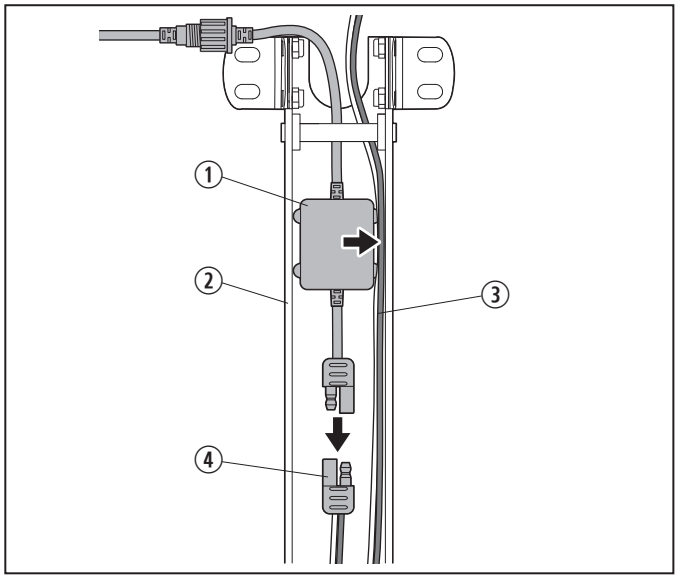

23 Mounting and Connecting the LED Controller Box

① LED Controller Box ③ Red/Black Wires
② Back Channel ④ Power Wire Connector

6. Route the red and black power wire(s) along the side(s) of the LED controller box and inside the back channel.

If there are two wires, place one wire on each side of the LED controller box.

7. Connect the LED controller box's 2-prong connector end to the power wire in the hardware.
8. Pull any slack wiring out the bottom of the channel to prevent pinched or damaged wiring during awning operation.

7.5 Installing Additional Back Channel Support

Complete this optional section to provide additional rigidity to the back channel by using installer supplied fasteners for the center mounting holes.

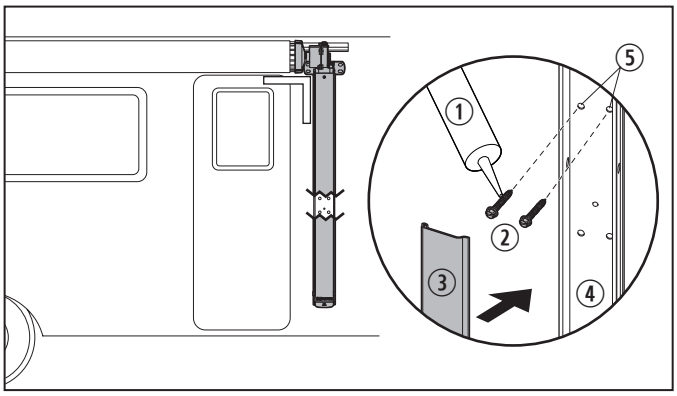

24 Installing Back Channel Support

① Sealant
② #14-10 x 1-1/2 in. Screw
③ Wiring Cover
④ Back Channel
⑤ Mounting Holes

1. Disconnect the I20 VAC power from the RV and disconnect the positive (+) 12 DC power terminal from the supply battery.
2. Using one pair of the RH back channel center mounting holes as a guide, drill 3/16 in. (4.8 mm) diameter holes into the solid structure of the RV. If drilling through steel, drill 7/32 in. (5.6 mm) diameter holes. The center mounting holes may be above or below the strut.
3. Apply sealant to the #14-10 x 1-1/2 in. screws (installer supplied). Oscar Rivets are an acceptable alternative.
4. Place the screws through the back channel (center mounting holes) and secure to the solid structure of the RV. Before tightening, verify the wiring is not caught between the hardware and the RV wall.

Structural backing (with skin) must be 3/8–1/2 in. (9.5–12.7 mm) thick to accommodate the Oscar Rivets.

5. Repeat Steps 1–4 for the LH back channel.

7.6 Completing the Back Channel Installation

WARNING: PINCH HAZARD.
Maintain a horizontal distance of at least 16 in. (40.64 cm) between the fully open awning and any permanent object. Failure to obey the following warning could result in death or serious injury.

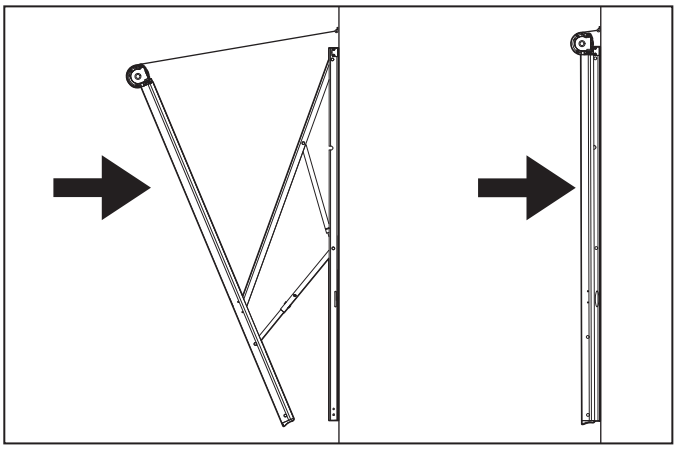

25 Opening and Closing the Awning

Complete the following steps to finish the back channel installation.

1. Reinstall the RH wire cover.
2. Restore power and fully retract the awning.
3. Verify the front and back channels align properly, and hardware nests properly within the channels.
4. Open and close the awning (fully extend) 4–5 times.

See "Open Awning" in the Operating Instructions for details.

5. Verify that the back channel is still square with the RV and FRTA.
6. Make any adjustments and repeat this procedure as needed.

7.7 Securing the Awning to the Rail

This section describes how to attach the awning fabric to the awning rail.

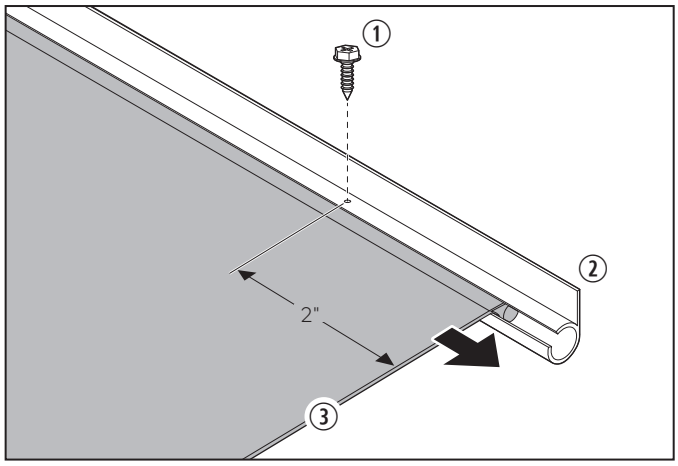

26 Securing the Awning Fabric

① #6-20 x 7/16 in. Self-drilling Hex Head Washer Screw

② Awning Rail

③ Awning Fabric Edge

1. Remove slack by pulling the right edge of the awning fabric approximately 1/4 in. (6.3 mm) to the right.
2. Secure the fabric with one #6-20 x 7/16 in. hex head washer screw through the awning rail, approximately 2 in. (50.8 mm) from the fabric edge.

The screw secures the awning fabric to the awning rail and prevents side-to-side fabric movement.

3. Repeat Steps 1–2 on the LH side, pulling the fabric to the left.

7.8 Installing the End Covers

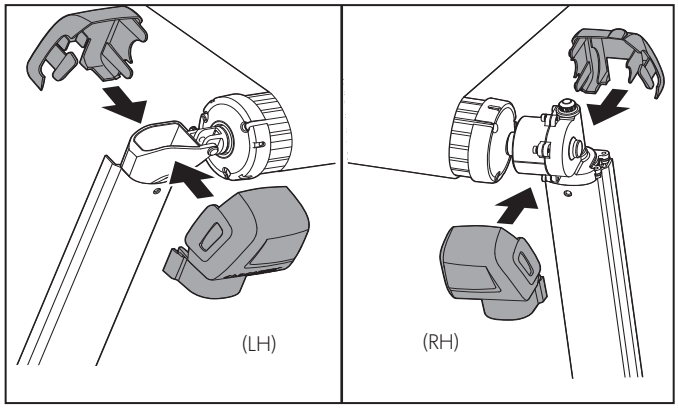

27 Installing the Covers

Snap the hardware end covers into place.

8 Post-Installation

Complete the following steps to verify a proper installation.

1. With power applied to the awning, open and close the awning to verify that each part functions correctly.
2. Verify the alignment and that the hardware nests properly. Adjust the hardware if necessary.

See instructions included with your RGB LED Controller & RF Wireless Remote 3317228.000 for additional LED Remote testing instructions.

9 Disposal

Place the packaging material in the appropriate recycling waste bins, whenever possible. Consult a local recycling center or specialist dealer for details about how to dispose of the product in accordance with all applicable national and local regulations.

LIMITED ONE-YEAR WARRANTY

LIMITED ONE-YEAR WARRANTY AVAILABLE AT WWW.DOMETIC.COM/WARRANTY.

IF YOU HAVE QUESTIONS, OR TO OBTAIN A COPY OF THE LIMITED WARRANTY FREE OF CHARGE, CONTACT:

DOMETIC CORPORATION
CUSTOMER SUPPORT CENTER
1120 NORTH MAIN STREET
ELKHART, INDIANA, USA 46514
1-800-544-4881 OPT 1

DOMETIC

dometic.com

YOUR LOCAL DEALER

dometic.com/dealer

YOUR LOCAL SUPPORT

dometic.com/contact

YOUR LOCAL SALES OFFICE

dometic.com/sales-offices

3316600.000 2023-07-24